Do not store reclaimed asphalt concrete or aggregate base with reclaimed asphalt concrete within 100-feet measured horizontally of any culvert, watercourse, or bridge.

The first paragraph of Section 26-1.02A, "Class 2 Aggregate Base" shall be modified to read:

> Aggregate for Class 2 aggregate base shall be free from organic matter and other deleterious matter, and shall be of such nature that it can be compacted readily under watering and rolling to form a firm and stable base. Aggregate may consist of broken and crushed asphalt concrete or Portland cement concrete and may contain crushed aggregate base or other rock materials. The material may contain no more than 3 percent brick by weight as determined by California Test Method 202 as modified: Brick material retained on a No.4 sieve shall be identified visually and separated manually. Brick quantification shall be based on total weight of dry sample. Also, material retained on the 4.75 mm (No.4) sieve shall contain no more than 15 percent of particles (gravel) that have no more than one fractured face.

The Quality Requirements contained in Section 26-1.02A shall be modified to read:

QUALITY REQUIREMENTS

Test	Contract Compliance
Resistance (R-Value) Virgin Rock Crushed Miscellaneous	 78 Minimum 80 Minimum
Sand Equivalent Virgin Rock Crushed Miscellaneous	 25 Minimum 35 Minimum
Durability Index	35 Minimum
Percentage Wear 100 Revolutions 500 Revolutions	 15 Maximum 52 Maximum

Payment
Quantities of Aggregate Base will be paid for at the contract unit price **per cubic yard** and in accordance with the provisions of Sections 26-1.06 and 26-1.07 of the Standard Specifications.

WEDGE PLANE/COLD PLANE ASPHALT CONCRETE PAVEMENT:

The Contractor shall wedge plane/cold plane the asphalt concrete pavement to a depth as shown on the approved plans or as directed by the Engineer.

The Contractor shall wedge plane 6 feet adjacent to the concrete curb and gutter, spandrels, cross gutters, and other paved surfaces to a depth as shown on the plans or as directed by the Engineer.

The cold plane machine shall have a cutter head at least 72 inches wide and shall be operated so as not to produce fumes or smoke.

The depth, width and shape of the cut shall be as indicated on the plans. The outside lines of the planed area shall be neat and uniform. The road surfacing to remain in place shall not be damaged in any way.

The material planed from the roadway surface, including material deposited in existing gutters or on the adjacent traveled way shall become the property of the Contractor and shall be immediately removed from the site of the work and disposed of as provided in Section 7-1.13, "Disposal of Material Outside the Highway Right of Way", of the Standard Specifications. The removal crew shall follow within 50 feet of the planer, unless otherwise directed by the Engineer.

Nothing in these Special Provisions shall relieve the Contractor from his responsibilities as provided in Section 7-1.09, "Public Safety" of the Standard Specifications.

Monday through Friday, the Contractor shall cold plane, place the 0.10' leveling course, and place the first 0.15' lift of HMA for a segment of work that can be completed prior to 5:00 PM Friday. Each segment will include the full width of the roadway. The same procedure shall apply to the final lift of ARHM with the work completed prior to 5:00 PM Friday.

The contractor shall have no vertical drops between drive lanes, resulting from Wedge Plane/Cold Plane during non-working hours.

Payment
The contract unit bid price paid per square yard for Wedge Plane/Cold Plane Asphalt Concrete Pavement shall include full compensation for providing all labor, tools, equipment and disposing of the grindings, and no additional compensation will be allowed therefor.

ROADWAY EXCAVATION:

Roadway excavation shall conform to the provisions of Section 19 of the Standard Specifications and these Special Provisions.

Roadway excavation shall include:
- Pavement removal
- Roadway cut and fill
- Slope grading
- Shoulder grading
- Driveway matchup grading
- Swale grading
- Saw Cut and excavate to subgrade per plans

At road connections and at limits of asphalt paving, existing pavement shall be header cut as shown on the plans or as directed by the Engineer. Full compensation for furnishing all labor,

tools and doing all the work necessary including grinding, and sawcutting shall be considered as included in the contract prices paid per ton for the various asphalt concrete items and no additional compensation will be allowed therefor.

Existing pavement including any base material shall be cut back to neat lines and removed as shown on the plans or as directed by the Engineer. Excess material will become the property of the Contractor and will be disposed of as provided in Section 7-1.13 of the Standard Specifications.

Monday through Friday, the Contractor shall excavate, compact, place the aggregate base section and place an aggregate base transition – not less than 2:1, for a segment of work that can be completed prior to 5:00 PM Friday. The contractor shall have no vertical drops adjacent to the existing pavement between 5:00 PM Friday and start of work the following Monday.

The contractor shall maintain access to adjacent streets, driveways, parking areas, bus stops and other locations as needed, with an aggregate base transition, not less than 4:1, during non-working hours.

Relative Compaction:

Whenever relative compaction is specified to be determined by Test Method No. Calif. 216, the in-place density may be determined by Test Method No. Calif. 231. The in-place density required by Test Method No. Calif. 312 may be determined by Test Method No. 231. The wet weight or dry weight basis and English Units of Measurement may be used at the option of the Materials Engineer.

Payment

The contract unit bid price paid per cubic yard for Roadway Excavation shall include full compensation for furnishing all labor, materials, tools, equipment, and incidentals, and for doing all work involved in Roadway Excavation/Earthwork, including sawcutting, hauling, placement and compaction of the excavated material, removal and disposal concrete curb and gutter, driveways and as directed by the Engineer and no additional compensation will be allowed therefor.

HOT MIX ASPHALT:

The asphalt concrete shall be Type "A" and shall conform to the requirements of Section 39 of the Standard Specifications and the following:

Aggregate grading shall be three-quarter inch (3/4") maximum, medium for base course and three-quarter inch (3/4") maximum, medium for the final course.

The asphalt lift thickness table, as shown in Section 39-6.01, "General Requirements" of the Standard Specifications, is revised as follows:

Total Thickness Shown on Plans	Minimum No. of Layers	Top Layer Thickness (foot)		Next Lower Layer Thickness (foot)		All Other Lower Layer Thickness (foot)	
		Min.	Max.	Min.	Max.	Min.	Max.
0.24-foot or less[a]	1	-	-	-	-	-	-
0.25-foot	2[b]	0.12	0.13	0.12	0.13	-	-
0.26 - 0.46 foot	2	0.12	0.21	0.14	0.25	-	-
0.47-foot or more	3 or more	0.15	0.21	0.15	0.25	0.17	0.25

Footnotes to asphalt thickness table are revised as follows:

a. No Change.
b. One layer of 0.25 foot thick may be placed as approved by the Engineer. When the Traffic Index specified is 5.5 or below, two layers shall be placed.

Asphalts:

Asphalt shall conform to the provisions in this Section, "Asphalts". Section 92, "Asphalts" of the Standard Specifications shall not apply.

Asphalt shall consist of refined petroleum or a mixture of refined liquid asphalt and refined solid asphalt, prepared from crude petroleum. Asphalt shall be:

1. Free from residues caused by the artificial distillation of coal, coal tar, or paraffin;
2. Free from water;
3. Homogeneous.

General:

The Contractor shall furnish asphalt in conformance with the State of California Department of transportation's Certification Program for Suppliers of Asphalt". The Department maintains the program requirements, procedures, and a list of approved suppliers at http://www.dot.ca.gov/hq/esc/Translab/fpmcoc.htm.

The Contractor shall ensure the safe transportation, storage, use, and disposal of asphalt.

The Contractor shall prevent the formation of carbonized particles caused by overheating asphalt during manufacturing or construction.

Performance Grade:

Performance graded (PG) asphalt binder shall conform to the following:

Property	AASHTO Test Method	Specification Grade		
		PG 64-10	PG 64-16	PG 70-10
Original Binder				
Flash Point, Minimum °C	T48	230	230	230
Solubility, Minimum %[b]	T44	99	99	99
Viscosity at 135 °C, Maximum, Pa·s	T316	3.0	3.0	3.0
Dynamic Shear, Test Temp. at 10 rad/s, °C Minimum G*/sin(delta), kPa	T315	64 1.00	64 1.00	70 1.00
RTFO Test[e], Mass Loss, Maximum, %	T240	1.00	1.00	1.00
RTFO Test Aged Binder				
Dynamic Shear, Test Temp. at 10 rad/s, °C Minimum G*/sin(delta), kPa	T315	64 2.20	64 2.20	70 2.20
Ductility at 25 °C Minimum, cm	T51	75	75	75
PAV[f] Aging, Temperature, °C	R28	100	100	110
RTFO Test and PAV Aged Binder				
Dynamic Shear, Test Temp. at 10 rad/s, °C Maximum G*/sin(delta), kPa	T315	31[d] 5000	28[d] 5000	34[d] 5000
Creep Stiffness, Test Temperature, °C Maximum S-value, Mpa Minimum M-value	T313	0 300 0.300	-6 300 0.300	0 300 0.300

Notes:

a. Not used.
b. The Engineer will waive this specification if the supplier is a Quality Supplier as defined by Department's "Certification Program for Suppliers of Asphalt".
c. The Engineer will waive this specification if the supplier certifies the asphalt binder can be adequately pumped and mixed at temperatures meeting applicable safety standards.
d. Test the sample at 3 °C higher if it fails at the specified test temperature. G*sin(delta) shall remain 5000 kPa maximum.
e. "RTFO Test" means the asphaltic residue obtained using the Rolling Thin Film Oven Test, AASHTO Test Method T240 or ASTM Designation: D2827.
f. "PAV" means Pressurized Aging Vessel.

Sampling:

The Contractor shall provide a sampling device in the asphalt feed line connecting the plant storage tanks to the asphalt weighing system or spray bar. The sampling device shall be accessible between 24 and 30 inches above the platform. The Contractor shall provide a receptacle for flushing the sampling device.

The sampling device shall include a valve:

1. With a diameter between 1/2 and 3/4 inches;

2. Manufactured in a manner that a one-quart sample may be taken slowly at any time during plant operations;

3. Maintained in good condition.

4. Contractor shall Replace Failed Valves

In the presence of the Engineer, the Contractor shall take 2 one-quart samples per operating day. The Contractor shall provide round friction top containers with one-quart capacity for storing samples.

Applying Asphalt:

Unless otherwise specified, the Contractor shall heat and apply asphalt in conformance with the provisions in Section 93, "Liquid Asphalts" of the Standard Specifications.

Section 39-2.01, "Asphalts" is replaced in its entirety with the followings:

Asphalt binder to be mixed with aggregate shall conform to the provisions in "Asphalts" of these Special Provisions.

The grade of asphalt binder shall be PG 64-10.

Liquid asphalt for prime coat shall conform to the provisions in Section 93, "Liquid Asphalts" of the Standard Specifications and shall be PG 64-10 unless otherwise designated by the contract item or otherwise specified in the Special Provisions.

Asphaltic emulsion for paint binder (tack coat) shall conform to the provisions in Section 94, "Asphaltic Emulsion" of the Standard Specifications for the rapid-setting or slow-setting type and grade approved by the Engineer.

Section 39-3.01B (1) shall be amended to include:

Aggregate of the 3/4 inch or 1/2 inch maximum size and aggregate for asphalt concrete base shall be separated into 3 or more sizes and each size shall be stored in separate bins. If 3 sizes are used, one bin shall contain that portion of the material which will pass the maximum size specified and be retained on a 3/8 inch sieve; one bin shall contain that portion of the material which will pass a 3/8 inch sieve and be retained on a No. 8 sieve; and one bin shall contain that portion of the material which will pass a No. 8 sieve.

Aggregate of 3/8 inch maximum size shall be separated into 2 sizes and each size shall be stored in separate bins. One bin shall contain that portion of the material which will pass the maximum size specified and be retained on a No. 8 sieve and one bin shall contain that portion of the material which will pass a No. 8 sieve.

The bin containing the fine material shall not contain more than 15 percent of material retained on the No. 8 sieve. The material in any of the other bins shall not contain more than

15 percent of material passing a No. 8 sieve. Failure to comply with this requirement shall be corrected immediately, and the material in the bins not meeting these requirements shall be re-screened or wasted.

All asphalt concrete for this project shall be supplied from one source unless approved by the Engineer. Said source shall be listed on the Contractors Source of Materials List as required in Section 6 of the Standard Specifications.

Asphaltic emulsion shall be furnished and applied as provided in Section 39-4.02.

In addition to the provisions in Section 39-5.01, "Spreading Equipment" of the Standard Specifications, asphalt paving equipment shall be equipped with automatic screed controls and a sensing device or devices.

When placing asphalt concrete to the lines and grades established by the Engineer, the automatic controls shall control the longitudinal grade and transverse slope of the screed. Grade and slope references shall be furnished, installed, and maintained by the Contractor. Should the Contractor elect to use a ski device, the minimum length of the ski device shall be 30 feet. The ski device shall be a rigid one piece unit and the entire length shall be utilized in activating the sensor.

When placing the initial mat of asphalt concrete on existing pavement, the end of the screed nearest the centerline shall be controlled by a sensor activated by a ski device not less than 30 feet. The end of the screed farthest from centerline shall be controlled by an automatic transverse slope device set to reproduce the cross slope designated by the Engineer, by a sensor activated by a similar ski device or as directed by the Engineer.

When paving contiguously with previously placed mats, the end of the screed adjacent to the previously placed mat shall be controlled by a sensor that responds to the grade of the previously placed mat and will reproduce the grade in the new mat within a 0.12 inch tolerance. The end of the screed farthest from the previously placed mat shall be controlled in the same way it was controlled when placing the initial mat.

Should the methods and equipment furnished by the Contractor fail to produce a layer of asphalt concrete conforming to the provisions, including straightedge tolerance, of Section 39-6.03, "Compacting" of the Standard Specifications or elsewhere in these Special Provisions, the paving operations shall be discontinued and the Contractor shall modify the equipment or methods, or furnish substitute equipment.

Should the automatic screed controls fail to operate properly during a day's work, the Contractor may manually control the spreading equipment for the remainder of that day. However, the equipment shall be corrected or replaced with alternative automatically controlled equipment conforming to the provisions in this section before starting another day's work.

General Criteria For Profiling:
In addition to the straightedge provisions in Section 39-6.03, "Compacting" of the Standard Specifications, asphalt concrete pavement shall conform to the surface tolerances specified herein.

The uppermost layer of asphalt concrete surfacing shall be profiled in the presence of the Engineer using a California Profilograph or equivalent in conformance with California Test 526 and as specified in these Special Provisions.

The California Profilograph or equivalent will not be required for the following areas of the pavement surface but shall conform to the straightedge requirements in Section 39-6.03, "Compacting" of the Standard Specifications:

1. Pavement with a total thickness less than 0.24 foot;

2. Pavement on horizontal curves with a centerline curve radius of less than 1,000 feet and the pavement within the superelevation transition on those curves;

3. Pavement placed in a single lift when required by the Special Provisions;

4. Pavement with extensive grade or cross slope correction which does not receive advance leveling operations in conformance with the provisions in Section 39-6.02, "Spreading" of the Standard Specifications;

5. Pavement for ramps and connectors with steep grades and high rates of superelevation, as determined by the Engineer;

6. Shoulders and miscellaneous areas.

The Contractor shall conform to California Test 526, except a zero (null) blanking band shall be used for determining the Profile Index. Prior to beginning profiles, the profilograph shall be calibrated in the presence of the Engineer. Two profiles shall be obtained within each traffic lane, 3 feet from and parallel with the edges of the lane.

Pavements profiled shall conform to the following Profile Index requirements:

1. Pavement on tangent alignment and pavement on horizontal curves having a centerline curve radius of 2,000 feet or more shall have a Profile Index of 0.16 foot or less for each 330 feet section profiled;

2. Pavement on horizontal curves having a centerline curve radius of 1,000 feet or more but less than 2,000 feet, including the pavement within the superelevation transition of these curves, shall have a Profile Index of 0.32 foot or less for each 330 feet section profile;

3. Pavement within any 330 feet section, containing high point areas with deviations in excess of 0.025 foot in a length of 25 feet or less, when tested in conformance with the requirements in California Test 526, shall be corrected by the Contractor regardless of the Profile Index.

The Contractor shall complete initial runs of the profilograph prior to opening the pavement to public traffic. If initial profiles cannot be made prior to opening the pavement to public

traffic, the initial runs of the profilograph shall be made the next day that traffic control is permitted for the area to be profiled.

Areas of the top surface of the uppermost layer of asphalt concrete pavement that do not meet the specified surface tolerances shall be brought within tolerance by abrasive grinding.

Abrasive grinding shall be performed to reduce individual deviations in excess of 0.025 foot, and to reduce the Profile Index of the pavement to be within the specified tolerance. Areas which have been subjected to abrasive grinding shall receive a seal coat. Deviations in excess of 0.025 foot which cannot be brought into specified tolerance by abrasive grinding shall be corrected by either (1) removal and replacement or (2) placing an overlay of asphalt concrete. The corrective method for each area shall be selected by the Contractor and shall be approved by the Engineer prior to beginning the corrective work. Replacement or overlay pavement not meeting the specified tolerances shall be corrected by the methods specified above. Corrective work shall be at the Contractor's expense. The Contractor shall run profilograms on the areas that have received abrasive grinding or corrective work until the final profilograms indicate the Profile Index of the area is within the specified tolerance.

When abrasive grinding is used to bring the top surface of the uppermost layer of asphalt concrete surfacing within the specified surface tolerances, additional abrasive grinding shall be performed as necessary to extend the area ground in each lateral direction so that the lateral limits of grinding are at a constant offset from, and parallel with, the nearest lane line or pavement edge, and in each longitudinal direction so that the grinding begins and ends at lines normal to the pavement centerline, within a ground area. Ground areas shall be neat rectangular areas of uniform surface appearance.

The original of the final profilograms that indicate the pavement surface is within the Profile Index specified shall become the property of the County and shall be delivered to the Engineer prior to acceptance of the contract.

Payment

The contract bid price paid per ton for Hot mix Asphalt shall include full compensation for furnishing all labor, tools, materials, equipment, and incidentals, and for doing all the work involved including the furnishing and applying asphaltic emulsion (paint binder).

Asphalt Concrete for road pavement, driveway, driveway tie-ins, asphalt concrete (miscellaneous area) and asphalt concrete dike will be paid for at a unit price per ton as a combined item, including mineral aggregate and asphalt binder in place on the roadbed.

The miscellaneous area shall be paid for at the contract price per square yard for Place Asphalt Concrete (Miscellaneous Area) in addition to the price paid for the materials involved.

The placing of Asphalt Concrete dike shall be paid in Linear Foot, and the quantities of dike will be paid at the contract price per ton for asphalt concrete.

At road connections and at limits of asphalt paving, existing pavement shall be header cut as shown on the plans or as directed by the Engineer. Full compensation for furnishing all labor, tools and doing all the work necessary including grinding, and sawcutting shall be considered

as included in the contract prices paid per ton for the various asphalt concrete items and no additional compensation will be allowed therefor.

ASPHALT RUBBER HOT MIX - GAP GRADED (ARHM-GG):

ARHM-GG, shall conform to the provisions for Type "A" asphalt concrete in Section 39, "Asphalt Concrete" of the Standard Specifications and these Special Provisions with the exception that ARHM-GG shall be spread at a temperature of not less than 285^0 F and not more than 350^0 F, measured in the hopper of the paving machine.

Binder for ARHM-GG shall be Type 2 asphalt-rubber binder with an asphalt modifier as specified in these Special Provisions.

The grade of asphalt-rubber binder shall be PG 64-16.

The asphalt modifier will be a resinous, high flash point, aromatic hydrocarbon compound and shall conform to the requirements following:

REQUIREMENTS FOR ASPHALT MODIFIER

Property	ASTM Test Method	Value
Flash Point, C.L.O.C., $*^0$C ($*^0$F)	D92	207 (405) min
Viscosity,cSt @ 100^0C (212^0F)	D445	X±3*
Molecular Analysis Asphaltenes, percent by mass Aromatics, percent by mass	 D2007 D2007	 0.1 max 55 min

*The symbol "X" is the viscosity of the asphalt modifier the Contractor proposes to furnish. The value "X" which the Contractor proposes shall be between the limits of 19 and 36 and shall be submitted in writing to the Engineer. Any proposed change requested by the Contractor in the value "X" shall require a new asphalt-rubber binder design.

The amount of asphalt-rubber binder to be added to the aggregate shall be between 6.7% and 8.7% by dry weight of the aggregate. The exact amount will be determined by the Engineer. The temperature of the aggregate at the time the asphalt-rubber binder is added shall be not more than 350^0 F.

Rubber for use in asphalt-rubber binder shall be free of loose fabric, wire and other contaminants except that up to 3% (by weight of rubber) calcium carbonate or talc may be

added to prevent rubber particles from sticking together. The rubber shall be sufficiently dry so as to be free flowing and not produce foaming when blended with the hot asphalt.

A sample of the asphalt-rubber binder proposed for use on the project, consisting of four one-quart cans, together with the proposed formulation of the binder shall be furnished to the Engineer at least two weeks before ARHM-GG pavement construction is scheduled to begin.

The method and equipment for combining the rubber and the asphalt shall be so designed and accessible that the Engineer can readily determine the percentage by weight for each material being incorporative into the mixture.

Equipment utilized in the production and proportioning of the asphalt-rubber binder shall include the following:

An asphalt heating tank with hot oil heat transfer to heat the asphalt to the necessary temperature before blending with the granulated rubber. This unit shall be equipped with a thermostatic heat control device.

A mechanical blender for proper proportioning and thorough mixing of the asphalt and rubber. This unit shall have both an asphalt totalizing meter (gallons or liters) and a flow rate meter (gallons per minute or liters per minute).

An asphalt-rubber storage tank equipped with a heating system to maintain the proper temperature of the binder and an internal mixing unit capable of maintaining a homogeneous mixture of asphalt and rubber.

An asphalt-rubber supply system equipped with a pump and metering device capable of adding the binder by volume to the aggregate at the percentage specified or ordered.

The equipment utilized in the manufacture of asphalt rubber binder shall keep the mix in a continuous blend state. The batch method is not acceptable.

The swell, moisture vapor susceptibility, and the stabilometer value requirement in Section 39-2.02, "Aggregate" of the Standard Specifications shall not apply to ARHM-GG.

Before opening a traffic lane to public traffic, when directed by the Engineer, a sand cover shall be spread uniformly over areas where ARHM-GG has been placed.

Sand shall be free from clay or organic material and shall be of such size that from 90% to 100% will pass a No. 4 sieve and not more than 5% will pass a No. 200 sieve.

Sand shall be spread at the approximate rate of from one to two pounds per square yard.

Traffic shall not be allowed on the ARHM-GG for at least one hour after final rolling operations have been completed.

Pneumatic tired rollers shall not be used to compact ARHM-GG.

The asphalt-rubber mixture shall not be used as a binder after it has been retained for more than 48 hours.

Type 2 Asphalt-Rubber Binder

Type 2 asphalt-rubber binder shall be a uniform and reacted mixture of compatible paving grade asphalt, extender oil, and reclaimed vulcanized rubber.

Extender oil shall be a resinous, high flash point aromatic hydrocarbon conforming to the following:

Viscosity, SUS @ 100^0 F (ASTM D 88)	2500 minute
Flash Point, COC, Degree F (ASTM D 92)	405 minute
Molecular Analysis (ASTM D 2007)	
Asphaltenes, % by weight	0.1 maximum
Aromatics, % by weight	55 minimum

The asphalt and extender oil, when combined shall form a material that is chemically compatible with the rubber.

The rubber used in Type 2 asphalt-rubber binder shall be reclaimed vulcanized rubber and shall contain between 22 percent and 39 percent by weight, natural rubber when tested in accordance with ASTM D 297. The rubber shall conform to the following grading when tested in accordance with ASTM C 136:

Sieve Size	Percentage Passing
No. 8	100
No. 10	98-100
No. 16	45-75
No. 30	2-20
No. 50	0-6
No. 100	0-2

The rubber shall contain no particles longer than 3/16 inch in length.

The extender oil shall be added to the asphalt at a rate between 2 percent and 6 percent by weight of the asphalt, the exact amount shall be determined by the asphalt-rubber supplier. The asphalt shall be at a temperature of not less than 350^0 F nor more than 425^0 F when the extender oil is added.

The asphalt-extender oil blend and rubber shall be combined and mixed together in the blender unit to produce a homogeneous mixture.

The amount of rubber to be added to the asphalt-extender oil blend shall be 18 percent and 22 percent by weight of the total combined mixture of asphalt, extender oil, and rubber. The exact amount shall be determined by the asphalt-rubber supplier. The asphalt-extender oil

blend shall be at a temperature of not less than 350^0 F nor more than 425^0 F when the rubber is added. After the material has reacted for at least 45 minutes, the asphalt-rubber shall be metered into the mixing chamber of the asphalt concrete production plant at the percentage specified or ordered.

The asphalt-rubber mixture shall be reacted for a minimum of 45 minutes from the time the rubber is added to the asphalt-extender oil blend. The temperature of the asphalt-rubber mixture shall be maintained between 375^0 F and 425^0 F during the reaction period.

The asphalt-rubber mixture shall possess the following physical property after the reaction period:

Viscosity at 400^0 F (ASTM D 2196) (Brookfield)	600-2000 cp

Asphalt-rubber shall consist of the following:

After reacting the PG 64-16, asphalt modifier and rubber, the asphalt-rubber binder shall conform to the following requirements:

Test Parameter	Specification Limits
Field Viscosity, Haake at 375^0 F in centipoise ASTM D 2669	1500-4000
Penetration, Cone at 77^0 F in 1/10 MM ASTM D 217	45 ± 25
Resilience 77^0 F in percent rebound ASTM D 3407	18 Minimum
Field Softening Point in degree F ASTM D 36	145 ± 20

Contractor shall have available a Haake Viscometer conforming to ASTM D 2669.

The asphalt-rubber mixture after reaching the desired consistency shall not be held at temperatures over 375^0 F for more than 4 hours.

General Requirements

The aggregate for ARHM-GG shall conform to the following grading and shall meet the quality requirements for "Type A" as specified in Section 39-2.02, "Aggregate" of the Standard Specifications.

For ½" maximum size aggregate, use the following grading:

Sieve Size	Limits of Proposed Gradation	Operating Range	Contract Compliance
3/4"		100	100
1/2"		90-100	90-100
3/8"	78-92	X±5	X±7
#4	28-42	X±5	X±7
#8	15-25	X±4	X±5
#30	5-15	X±4	X±5
#200		2-7	0-8

The Los Angeles Rattler requirement in Section 39-2.02, "Aggregate" of the Standard Specifications shall be amended to read "40 percent maximum loss at 500 revolutions".

ARHM-GG shall be spread at a temperature of not less than 285^0 F and not more than 350^0 F, measured in the hopper of the paving machine, with ambient temperature of not less than 55^0 F.

Measurement

The mixture of ARHM-GG will be measured by the ton in the same manner specified for asphalt concrete in Section 39-8.01, "Measurement" of the Standard Specifications.

Payment

The contract price paid per ton for ARHM-GG shall include full compensation for furnishing all labor, materials, tools, equipment, and incidentals, and for doing all the work involved in placing ARHM-GG complete in place, including header cutting as directed by the Engineer, furnishing and applying asphalt binder, furnishing and spreading sand cover if directed by the Engineer, as shown on the plan, as specified in the Standard Specifications and these Special Provisions, and as directed by the Engineer.

COMPENSATION ADJUSTMENTS FOR PRICE INDEX FLUCTUATIONS:

The provisions of this section shall apply only to the following contract items:

ITEM CODE	ITEM
390130	Hot Mix Asphalt
390137	Rubberized Hot Mix Asphalt (GG)

The compensation payable for asphalt binder used in hot mix asphalt will be increased or decreased in conformance with the provisions of this section for paving asphalt price fluctuations exceeding 10 percent (Iu/Ib is greater than 1.10 or less than 0.90) which occur during performance of the work.

The adjustment in compensation will be determined in conformance with the following formulae when the item of asphalt concrete is included in a monthly estimate:

A. Total monthly adjustment = AQ

B. For an increase in paving asphalt price index exceeding 10 percent:

$$A = 0.90 (Iu/Ib - 1.10) Ib$$

C. For a decrease in paving asphalt price index exceeding 10 percent:

$$A = 0.90 (Iu/Ib - 0.90) Ib$$

D. Where:

A = Adjustment in dollars per ton of paving asphalt used to produce asphalt hot mix asphalt rounded to the nearest $0.01.

Iu = The California Statewide Paving Asphalt Price Index which is in effect on the first business day of the month within the pay period in which the quantity subject to adjustment was included in the estimate.

Ib = The California Statewide Paving Asphalt Price Index for the month in which the bid opening for the project occurred.

Q = Quantity in tons of asphalt binder that was used in producing the quantity of hot mix asphalt shown under "This Estimate" on the monthly estimate using the amount of asphalt binder determined by the Engineer.

The adjustment in compensation will also be subject to the following:

A. The compensation adjustments provided herein will be shown separately on payment estimates. The Contractor shall be liable to the State for decreased compensation adjustments and the Department may deduct the amount thereof from moneys due or that may become due the Contractor.

B. Compensation adjustments made under this section will be taken into account in making adjustments in conformance with the provisions in Section 4-1.03B, "Increased or Decreased Quantities" of the Standard Specifications.

C. In the event of an overrun of contract time, adjustment in compensation for paving asphalt included in estimates during the overrun period will be determined using the California Statewide Paving Asphalt Price Index in effect on the first business day of the month within the pay period in which the overrun began.

The California Statewide Paving Asphalt Price Index is determined each month on the first business day of the month by the Department using the median of posted prices in effect as posted by Chevron, Mobil, and Unocal for the Buena Vista, Huntington Beach, Kern River, Long Beach, Midway Sunset, and Wilmington fields.

In the event that the companies discontinue posting their prices for a field, the Department will determine an index from the remaining posted prices. The Department reserves the right to include in the index determination the posted prices of additional fields.

The California Statewide Paving Asphalt Price Index is available on the Division of Engineering Services website at: http://www.dot.ca.gov/hq/esc/oe/asphalt_index/astable.html.

PLACE ASPHALT CONCRETE DIKE AND OVERSIDE DRAIN:

Asphalt concrete dikes and overside drains shall conform to the County Road Improvement Standards and Specifications, Caltrans Standard Plans as specified and as directed by the Engineer.

The pay quantity of asphalt concrete dikes and overside drains shall be for placement, and shall be paid for as a separate item of work in addition to the price paid for the asphalt concrete material. The Asphalt Concrete material will be paid as per ton. Hot Mix Asphalt Concrete shall meet the requirements provided in the special provisions for Hot Mix Asphalt.

Asphalt binder to be mixed with the aggregate shall be PG 70-10 in accordance with the Special Provision for Asphalt, or as directed by the Engineer.

Payment
The contract unit prices paid **per lineal foot** for Place Asphalt Concrete Dike, and **per each** for Place Asphalt Concrete Overside Drain, and shall include full compensation for furnishing all labor, materials (other than the quantity of HMAC), tools, and equipment and for doing all work involved in placing and compacting the dikes and no additional compensation will be allowed therefor.

PLACE ASPHALT CONCRETE (MISCELLANEOUS AREA):

Place asphalt concrete miscellaneous areas shall conform to the County Road Improvement Standards and Specifications, the plans, and as directed by the Engineer.

Hot Mix Asphalt Concrete shall meet the requirements provided in the special provisions for Hot Mix Asphalt.

Sawcut and remove existing driveway and pave with Asphalt Concrete as called out on the plans shall be considered as included in this provision for compensation.

Asphalt binder to be mixed with the aggregate shall be PG 64-10 in accordance with the Special Provision for Asphalt, or as directed by the Engineer.

Payment
The contract unit price paid **per ton** for Place Asphalt concrete (Miscellaneous Area) shall include full compensation for furnishing all labor, materials (including the quantity of HMAC), tools, and equipment and for doing all the work involved in placing and compacting the miscellaneous areas and no additional compensation will be allowed therefore.

PAVEMENT SAFETY EDGE:

Pavement Safety Edge shall be installed at the locations shown on the plans or where designated by the Engineer and in conformance with these special provisions.

Safety Edge material shall match the adjoining pavement material.

The paver shall include an approved longitudinal paver wedge system to create a sloped safety edge as shown on the plans. The wedge system shall be attached to the screed and shall compact the HMA to a density at least as dense as the compaction imparted to the rest of the HMA layer by the paving screed. The system shall provide a sloped Safety Edge equal to 30 degrees plus or minus 5 degrees measured from the pavement surface cross slope extended.

The use of a single plate strike off is not permitted. The system shall be adjustable to accommodate varying paving thicknesses. The Engineer may allow the Contractor to use handwork for short sections or to saw cut the sloped Safety Edge after paving operations are completed in areas such as transitions at driveways, intersections, interchanges.

The Contractor shall submit the proposed system for approval. The Engineer may require proof that the system has been used on previous projects with acceptable results or may require a test section constructed prior to the beginning of work to demonstrate that it creates an acceptable wedge shape and compaction. Paving shall not begin until the system is approved in writing by the Engineer. The Safety Edge may be constructed on each lift of HMA or on the full specified plan depth on the final lift. The finished shape of the Safety Edge shall extend for the full depth of the asphalt pavement or for the top 5 inches whichever is less.

Payment
Full compensation for constructing Pavement Safety Edge shall be considered as included in the contract price paid per ton for Hot Mix Asphalt, which shall include furnishing of all labor, materials, tools, equipment, and incidentals, and for doing all the work involved in construction of the Pavement Safety Edge including furnishing the hot mix asphalt, excavation and backfill, as specified in the Standard Specifications and these special provisions and as directed by the Engineer. No additional compensation will be allowed therefor.

ADJUST MANHOLE TO GRADE:

Existing manholes and Cleanout shall be adjusted to finish grade with materials similar in quality to those in the original structure in accordance with the applicable provisions of Sections 15-2 of the Standard Specifications and these Special Provisions.

After the manhole frame has been removed, the top of the structure shall be carefully trimmed to provide a suitable foundation for the new material.

The Valves casing shall be cut and lower if needed prior to cold planning operation with the coordination of utility owners.

Sewer Manhole

The contractor shall be responsible for lowering the sewer manholes, in the Cold Plane areas, prior to Cold Plane. The sewer manholes will be adjusted to final grade by utility owner or by the contractor if authorized by the owner.

Edison Manhole

Southern California Edison (SCE) shall be responsible to lower and final adjustment to grade within the road right of way where conflict exists. Contractor must coordinate lowering and final adjustment operation with Edison.

Storm Drain Manhole

The contractor shall be responsible for lowering and final adjustment to grade in the Cold Plane areas in accordance with the Riverside County Flood Control District (RCFCD) standard and Specifications. Contractor must coordinate lowering and final adjustment operation with RCFCD.

Verizon/GTE Manhole

The contractor shall be responsible for lowering Verizon/GTE manholes; Utility owner shall be responsible for final adjustment to grade within the road right of way where conflict exists. Contractor must coordinate lowering and final adjustment operation with Verizon/GTE.

To coordinate preconstruction meeting and inspection of work done to adjust manholes for Verizon and/or GTE, Contractor shall contact Chad Kowalinski (Coordinator/Inspector) at (951) 566-7582, email: chad.c.kowalinski@verizon.com.

Time Warner Telecom and Level 3 Manhole

The contractor shall be responsible for lowering Time Warner and Level 3 manholes, and utility owner shall be responsible for final adjustment of their manhole to grade within the road right of way where conflict exists. Contractor must coordinate lowering and final adjustment operation with Time Warner and Level 3.

Nothing in these Special Provisions shall relieve the Contractor from his responsibilities as provided in Section 7-1.09, "Public Safety" of the Standard Specifications.

After completion of the work, the structure covers, frames, grade rings and old concrete collar debris that were removed from the roadbed shall become the property of the Contractor.

Payment

The contract unit bid price paid per each for Adjust Manhole to grade as listed in the bid item list and shall include full compensation for furnishing all labor, materials, tools, equipment,

and incidentals, for doing all the work involved including the installation of the concrete ring and no additional compensation will be allowed therefor.

MINOR CONCRETE:

Minor Concrete curb and gutter, monolithic concrete curb at back of sidewalk, driveway/ driveway approach, sidewalk, and curb ramp, cross gutter, spandrel and dip-section shall be constructed in accordance with the County Road Improvement Standards And Specifications, or as directed by the Engineer and in conformance with Section 51, 73 and 90 of Standard Specifications, except as herein modified:

> Class 2 concrete shall be used for commercial driveways, cross gutter, spandrel, and dip-section.
>
> Class 3 concrete shall be used for residential driveway, sidewalks, curb and gutter, and curb ramps.

Preparation of subgrade for the concrete structures shall be done in conformance with the requirements of Section 73-1.02 of the Standard Specifications.

The placement of aggregate base material if required under concrete shall be in accordance with County Road Improvement Standards and Specifications.

Bid item for Minor Concrete (Sidewalk) includes:

1. Removal and replacement of existing sidewalk with new sidewalk (at some portion of the project); and
2. Construction of new sidewalk (on some other portion of the project) as shown on the plans.

Contractor must not include all of the sidewalk removal cost within this item of work, because some of the removal is being compensated by bid item "Clearing and Grubbing".

The area behind and along the concrete improvements shall be filled and compacted with native or select material and graded to match and provide a smooth transition from the edge of the new improvements, to the satisfaction of the Engineer.

Excess material resulting from the excavation of the subgrade shall be disposed of as elsewhere provided in these Special Provisions.

The Contractor is responsible for meeting all requirements of the Americans with Disability Act (ADA).

Construction of curb and gutter, monolithic concrete curb at back of sidewalk, curb ramp, cross gutter, dip section and spandrel, driveway/driveway approach shall include, but not be limited to, the following:

1) Removal and disposal of existing curb, and/or curb and gutter, driveway, sidewalk, curb ramp, cross gutter, spandrel and Dip-section, existing pavement soil and aggregate as required;
2) Establishing grades, and assuring that all grades are met;
3) Performing all grading and compaction – including all required aggregate base import, as directed by the Engineer and in accordance with County Standard 403;
4) Construction of new curb, and/or curb and gutter, monolithic concrete curb at back of sidewalk, driveway/driveway approach, sidewalk, curb ramps, cross gutter, spandrel and dip-section;
5) All scoring/grooving and required saw cutting;
6) Repair of existing asphalt and PCC surfacing;
7) Installing 1/2" wide expansion joints;
8) All landscaping, and related work, to return the area adjacent to the curb ramp to its original condition and to conform the area to the new improvements;

Payment
The contract unit bid prices paid **per linear foot** for Curb and Gutter, monolithic concrete curb at back of sidewalk, **per each** for curb ramp, **per square foot** for driveway/driveway approach, sidewalk, cross gutter, spandrel and dip-section, and shall include full compensation for furnishing all labor, equipment, materials and tools, and incidentals, and for doing all the work involved including disposal of removed material, and construction of minor concrete items of work complete in place including but not limited to the furnishing and placing of expansion joints within the right of way and as directed by the Engineer, and no additional compensation will be allowed therefor.

CURB RAMP DETECTABLE WARNING SURFACE (TRUNCATED DOMES):

This work includes installing detectable warning surface on the existing curb ramps or on the areas as shown on the plans, and as specified in these Special Provisions, and as directed by the Engineer.

Curb ramp detectable warning surface must be:

1. Yellow color complying with Federal Standard 595B, Color No. 33538.
2. Raised truncated domes.

The manufacturer must provide a written 5-year warranty for detectable warning surface, guaranteeing replacement when there is defect in the dome shape, color fastness, sound-on-cane acoustic quality, resilience, or attachment. The warranty period will begin upon acceptance of the contract.

Installation of curb ramp detectable warning surface must comply with the manufacturer's recommendations.

Detectable Warning Surface must be Cast-in-Place type; existing ramp must be removed and reconstructed to ADA standards with like material.

Curb ramp detectable warning surface will be determined as units from the actual count in place.

Note: full compensation for Detectable Warning Surface (Truncated Domes) constructed for newly built curb ramps as specified above under provision entitled "Minor Concrete" shall be considered as included in the contract unit price paid for Minor Concrete (Curb Ramp) and no separate payment will be made therefor.

Payment
The contract price paid **per each** for Curb Ramp Detectable Warning Surface (Truncated Domes) includes full compensation for furnishing all labor, materials, tools, equipment and incidentals for doing all work involved in constructing detectable warning surface on existing curb ramps, complete in place, as shown on the plans, as specified in these Special Provisions, and as directed by the Engineer.

MINOR CONCRETE DRAINAGE STRUCTURES:

Minor concrete drainage structures shall be constructed in accordance to the Plans and shall conform to the applicable portions of Section 51, 52, 75 and 90 of the standard Specifications.

Minor concrete structures for this project are:

- Combination Inlet Catch Basin
- Remove and Replace Under sidewalk drain
- Remove and Replace Curb Drain

Concrete to be used in the construction of minor structure shall be Class 2 concrete.

Splashing, staining, or spotting on the exposed face of the wall stem shall be removed.

Removal of existing inlets shall be paid separately under bid item "Remove Inlet". Contractor shall remove and dispose of existing inlets as shown on the plans.

Payment
The contract unit bid price paid per each for combination inlet catch basin, under sidewalk drain, curb drain, and remove inlet, and shall include full compensation for furnishing all labor materials, tools and equipment, and for doing all the work involved in construction of these minor concrete drainage structures, including removal of existing inlet, minor concrete structure excavation and backfill, no additional compensation will be allowed therefor.

MINOR CONCRETE (MISCELLANEOUS CONSTRUCTION):

Minor Concrete (Miscellaneous Construction) as shown on the plan shall be constructed in accordance with the County Road Improvement Standards And Specifications, or as directed by the Engineer and in conformance with Section 51, 73 and 90 of Standard Specifications and/or as directed by Engineer.

Payment
The contract unit bid price paid **per cubic yard** for Minor Concrete (Miscellaneous Construction) which shall include full compensation for furnishing all labor materials, tools and equipment, and for doing all the work involved in construction of these minor concrete structures, no additional compensation will be allowed therefor.

FINISHING ROADWAY

Finishing roadway shall conform to Section 22 of the Standard Specifications.

Payment
Full compensation, except as otherwise provided herein, for conforming to the requirements of this article shall be paid for on a lump sum basis and no additional compensation will be allowed therefor.

STREET NAME SIGNS:

Street name signs shall consist of two double-face signs showing street name only (no house numbers) mounted at right angles in accordance with plans, County Standard No. 1220, and or Standard 1221, Standard Specifications, these Special Provisions and as directed by Engineer.

Payment
The contract unit prices paid per each for Roadside Sign shall include full compensation for furnishing all labor, materials, tools, equipment, and incidentals and for doing all the work including all necessary concrete, excavation and backfill as specified in the Standard Specification and these Special Provisions or as directed by the Engineer and no additional compensation will be allowed therefor.

ROADSIDE SIGNS (INSTALL/RELOCATE/SALVAGE):

Roadside signs (install/relocate/salvage) shall conform to the provisions in Section 56-2, "Roadside Signs" of the Standard Specifications, and in accordance with Standard Plans RS2 and as directed by the Engineer.

Existing roadside signs shall be removed and salvaged to the nearest county yard and as directed by the engineer.

Roadside signs shall be installed at the locations shown on the construction plans or where directed by the Engineer.

The Contractor shall furnish and install roadside signs, in accordance with Standard Plans RS2, at the locations shown on the plans or as directed by the Engineer.

Roadside signs with steel posts shall be installed at the location shown on the construction plans or where directed by the Engineer.

Roadside signs furnished by the Contractor shall be of the standard size specified in the State of California Department of Transportation Sign Specification Sheets, unless otherwise indicated on the construction plans.

Sheeting shall be guaranteed against defects for a period of ten years from the date of fabrication.

The base metal shall be new aluminum, 0.08 gauge, of alloys 6061-T6 or 5052-H38 conforming to the requirements of ASTM Designation: B209.

Any reflective sheeting supplied as a part of this contract, whether as a legend or background, shall be FHWA FP-85 Type IIA or AASHTO M268 Type III.

Reflective sheeting shall be applied to the sign by a method approved by the manufacturer of the sheeting and shall produce a durable bond equal to or greater than the strength of the reflective sheeting. No air pockets or bubbles shall exist between the sheeting and aluminum backing.

The reflective material and screening inks or overlay film shall be graffiti proof. The graffiti proofing method shall be supplied by and/or approved by the sheeting manufacturer. Neither the color nor the reflective intensity of the finished sign shall be significantly diminished by the use of graffiti remover when used in a manner approved by the Transportation Department in conjunction with the sheeting manufacturer. Any signs graffitied by over the counter spray paint or marking pens, which fail to be restored, shall be replaced by the sign sheeting manufacturer.

All letters and numerals shall be in accordance with the "Standard Alphabet of Highway Signs" as used by the State of California, Department of Transportation.

All signs shall be installed using hex head bolts, washers, nuts and jam nuts in accordance with Standard Plans RS2 or as directed by the Engineer.

All existing signs with perforated square posts will be relocated as shown on the plan, and all others signs which are currently installed on other than square perforated steel tube posts will be salvaged and replaced with new sign and post conforming to County Standard No. 1222. Relocation of sign shall be considered as included in the contract price paid for Roadside Sign-one post. The existing signs those need post replacement will be paid under bid item for Replace Wood Post with new Steel Post.

Unless otherwise approved by the Engineer, each roadside sign shall be installed at the new location on the same day that the sign is removed from its original location.

Payment

The contract unit prices paid **per each** for Roadside Signs, Salvage Roadside Signs, and Replace Wood Post with new Steel Post shall include full compensation for furnishing all labor, materials, tools, equipment, and incidentals and for doing all the work including all

necessary concrete, excavation and backfill as specified in the Standard Specification and these Special Provisions or as directed by the Engineer and no additional compensation will be allowed therefor.

REMOVE TRAFFIC STRIPE AND PAVEMENT MARKING:

Grinding shall be used for the removal of painted/thermoplastic traffic stripe, and such removal operation is being performed within 10 feet of a lane occupied by public traffic, the residue including dust shall be removed immediately after contact between the sand and the surface being treated. Such removal shall be by wet abrasive blasting, hydro-blasting or vacuum blasting, and shall comply with AQMD regulations. No water from hydro-blasting operations shall be allowed to enter the storm drain system.

Grinding for removal of traffic stripe shall be feathered out to irregular and varying widths.

Pavement markings shall be removed by grinding a rectangular area, rather than just lettering or markings, so the old message cannot be identified. Contractor shall not grind below the finish surface of the existing asphalt.

Raised pavement markers shall be removed prior to CIR operation.

If removal of existing striping is performed more than 24 hours prior to CIR operation, the Contractor shall place reflective temporary striping tape throughout the limits of sandblasting, to provide channelization of traffic, for all lanes of travel.

Temporary striping tape shall be removed subsequent to CIR.

Nothing in these Special Provisions shall relieve the Contractor from his responsibilities as provided in Section 7-1.09, "Public Safety," of the Standard Specifications.

Payment
Full compensation for initial Remove Traffic Stripe and Pavement marking and raised pavement markers shall be considered as included in the contract bid price for Cold Plan Asphalt Concrete Pavement.

PAINT TRAFFIC STRIPE:

Painting traffic stripe shall conform to the provisions in Sections 84-1, "General" and 84-3, "Painted Traffic Stripes and Pavement Markings" of the Standard Specifications and these Special Provisions.

Traffic striping shall be applied in two coats with airless equipment and shall be performed with a roadliner truck mounted striping machine. Where the configuration or location of a traffic stripe is such that the use of a roadliner truck mounted striping machine is unsuitable, traffic striping and glass spheres may be applied by other methods and equipment approved by the Engineer.

Newly painted traffic striping shall be protected from damage by public traffic or other causes until the paint is thoroughly dry. Any newly painted traffic striping which are damaged as a result of the construction, including wheel markings by public traffic and the construction equipment, shall be repainted by the Contractor and any associated removals shall be performed as called for in these Special Provisions.

Payment
The contract price paid **per linear foot** for Paint Traffic Stripe (2 Coats) shall include full compensation for furnishing all labor, materials, tools, equipment, and incidentals, and for doing all the work involved in painting traffic stripe (regardless of the number, widths, and types of individual stripes involved in each traffic stripe) including any necessary cat tracks, dribble lines any layout work, complete in place as shown on the plans, as specified in the Standard Specifications and these Special Provisions, and as directed by the Engineer.

THERMOPLASTIC CROSSWALK AND PAVEMENT MARKING:

Thermoplastic crosswalk and pavement markings shall conform to the provisions in Sections 84-1, "General," and 84-2, "Thermoplastic Traffic Stripes and Pavement Markings," of the Standard Specifications and these Special Provisions.

Newly painted traffic striping shall be protected from damage by public traffic or other causes until the paint is thoroughly dry. Any newly painted traffic striping which are damaged as a result of the construction, including wheel markings by public traffic and the construction equipment, shall be repainted by the Contractor and any associated removals shall be performed as called for in these Special Provisions.

Payment
The contract price paid per **square foot** for Thermoplastic crosswalk and pavement marking shall be paid by the square foot price bid and shall include full compensation for furnishing all labor, materials, tools, equipment, and incidentals and doing all the work necessary to place the pavement markings complete in place and no additional compensation will be allowed.

PAVEMENT MARKER (REFLECTIVE):

Pavement Marker (Reflective) shall be installed in accordance with the plans, the Caltrans Standard Plans or as directed by the Engineer.

Pavement markers shall conform to the provisions in Section 85, "Pavement Markers" of the Standard Specifications and these Special Provisions.

Pavement markers shall be placed to the line established by the Engineer. All additional work necessary to establish satisfactory lines for markers shall be performed by the Contractor.

Pavement markers shall be installed where indicated on the plans in accordance with the indicated striping detail. Refer to Standard Plans A20-A through A20-D for striping and markings details.

Markers and adhesive removal shall be performed by a method approved by the Engineer. Any pavement scarring resulting from the markers removal shall be repaired to the satisfaction of the Engineer.

Payment
The contract price paid per each for Pavement Markers (reflective) and shall include full compensation for furnishing all labor, materials, tools, equipment, and incidentals, and for doing all the work involved including the removal of existing pavement markers and no additional compensation will be allowed therefor.

OBJECT MARKER (TYPE "L-1")

Object markers shall conform to the provisions in Section 82, "Markers and Delineators," of the Standard Specifications, plans and these special provisions. Object marker shall be Type "L-1".

Payment
The contract price paid per each for object marker shall include full compensation for furnishing all labor, materials, tools, equipment, incidentals and doing all the work involved, and no additional compensation will be allowed therefor.

DETECTORS LOOP:

Detectors shall conform to the provisions in Section 86-5, "Detectors", of the Standard Specifications and these Special Provisions.

Delay timers shall delay calls only during display of the associated red or yellow indications. If a vehicle departs the area of detection prior to expiration of the assigned delay period, the timer shall reset and no call shall be placed upon the controller. During display of the associated green indication, detectors shall operate in the present mode and calls shall not be delayed.

Inductive Loops

Detector loops' configuration shall be Type E unless otherwise shown on the construction plan, in the Special Provisions or as directed by the Engineer.

Limit Line detector loop configuration shall be modified Type E with diagonal saw cuts and wire winding conforming to Type D loop configuration.

Detector loops' wire shall be Type 2.

Detector loops' lead-in cable shall be Type B.

Detector loops' curb terminations shall be Type A in accordance with Standard Plans ES-5D. The conduit shall extend 18 inches into the paved roadway.

Loop sealant shall be the Hot-Melt Rubberized Asphalt sealant type, unless otherwise directed by the Engineer. Loop conductors and sealant shall be installed on the same day the loop slots are cut.

All detector loops shall be tested sequentially by the following methods:

- impedance (measured by megaohms)
- resistance (measured by ohms)
- inductance (measured in microhenries)

Payment
The contract unit bid price paid **per each** for Detector Loops including the removal and disposal of existing detector loops as specified in the special provisions and as directed by the Engineer shall include full compensation for furnishing all labor, materials, tools, and equipment and no additional compensation will be allowed therefor.

RELOCATE BUS STOP SIGN/BENCH:

Temporary relocation of Bus Stop sign/bench, if needed, shall be done in accordance with standard plans and specification of Riverside Transit Agency (RTA). Contractor shall coordinate with RTA temporary relocation of sign and bench with RTA and according to RTA Specifications, or as directed by the Engineer.

Payment
The cost for temporary relocation of bus stop sign/bench and shall be included under Clear and Grubbing, which include full compensation for furnishing all labor, equipment, materials, and doing all work required, and no additional compensation will be allowed therefor.

REINFORCED CONCRETE PIPE:

Reinforced concrete pipe shall conform to the provisions in Section 65, "Reinforced Concrete Pipe" of the Standard Specifications, the plans, as directed by Engineer, and these Special Provisions.

Contractor shall remove existing CMP Storm Drain and place Reinforced Concrete Pipe and match the flow line as called out on the plan.

The D- loading for the proposed reinforced concrete pipes is 2000D.

The slurry shall be allowed to cure a minimum of two days prior to final paving or as directed by Engineer.

Slurry cement backfill shall conform to Section 19-3.062 of the Standard Specifications, except for full compensation therefor shall be considered as included in the prices paid for the contract unit bid paid per linear foot for the different sizes of Reinforced Concrete Pipe specified in the bid list and no additional compensation will be allowed therefor.

Full compensation for providing, installing and maintaining temporary road steel plates if required shall be considered as included in the prices paid per linear foot for Reinforced Concrete Pipe of the types specified in the bid list and no additional compensation will be allowed therefor.

Except as otherwise designated by classification on the plans or in the specifications, joints for culvert and drainage pipes shall conform to the plans or specifications for standard joints.

MATERIALS

The concrete for reinforced concrete pipe shall contain not less than 470 pounds of cementitious material per cubic yard and have a water–cementitious material ratio that does not exceed 0.40 by weight. Supplementary cementitious material is optional. Reinforcement shall have a minimum cover of 1 inch.

Reinforced concrete pipe, having concrete cover over the steel reinforcement greater than the cover specified in AASHTO Designation: M 170, shall conform to the provisions in Section 65-1.02, "Materials" and Section 65-1.02A, "Circular Reinforced Concrete Pipe" of the Standard Specifications, except the width of crack produced by the D-load test specified in AASHTO Designation: M 170

Reinforced concrete pipe that is to be hydrostatically tested shall be strength tested by the 3-edge bearing method to a maximum D-load of 10 percent greater than the 0.01-inch cracking D-load specified in AASHTO Designation: M 170 or to the actual D-load required to produce a 0.01-inch crack, whichever is the lesser.

Payment

The County does not pay any additional cost for excess concrete cover over steel reinforcement.

The contract unit bid price for the Concrete Pipe is paid **per linear foot** and shall include full compensation for furnishing all labor, materials, tools, equipment, and incidentals, and for doing all the work involved including removal of existing CMP, excavation, backfill, and slurry cement backfill as specified in the Standard Specifications and these Special Provisions, and as directed by the Engineer.

MISCELLANEOUS WORK (AS DIRECTED):

Miscellaneous work (as directed) shall consist of necessary work that is not included in other contract bid items, as determined by the Engineer. Miscellaneous directed work shall be performed as directed by the Engineer and in accordance with the applicable standards and specifications.

Method of Payment:
Payment for implementing miscellaneous directed work will be paid for on a force account basis, in accordance with Section 9-1.03 of the Standard Specifications, up to the fixed bid price, for the work performed.

PIPE HANDRAILING:

Pipe handrailing shall conform to the provisions in Section 83-1.02A, "Pipe Handrailing.", as shown on the plan, these Special Provisions and as directed by Engineer.

MEASUREMENT AND PAYMENT

The Pipe handrailing will be measured by the linear foot from end to end along the face of the railing, including end and intermediate posts, and with no deductions for gaps in railing for lighting and sign supports.

The contract prices paid **per linear foot** for Pipe Handrailing, and shall include full compensation for furnishing all labor, materials, tools, equipment, and incidentals, and for doing all the work involved in constructing the railings, complete in place, including, but not limited to, excavation, backfill and disposal of surplus material, concrete and reinforcing steel, as shown on the plans, as specified in these specifications and the special provisions, and as directed by the Engineer.

CHAIN LINK FENCE:

Contractor shall install Chain Link Fence CL-6 where shown on the plan in accordance with section 80 Fences, and Section 80-4 Chain Link Fence of Standard Specification, these Special Provisions and as directed by Engineer.

MEASUREMENT

Quantities of chain link fence to be paid for will be determined by the linear foot from actual measurements, the measurements to be made parallel to the ground slope along the line of the completed fence, deducting the widths of openings.

Quantities of gates will be determined from actual count. When more than one gate is placed in an opening, each single unit placed will be counted as a gate. A gate unit complete in place shall include one gate with all necessary fittings, hardware, and gate and latch posts with braces.

Payment

Chain Link Fence will be paid for at the contract price per linear foot, for chain link fence of the type designated in the Engineer's Estimate and the contract unit price per chain link gate, if gates are required. The size and type of gate will be designated in the contract item or special provisions.

Full compensation for clearing the line of the fence and disposing of the resulting material, excavating high points in the existing ground between posts, excavating holes, disposing of surplus excavated material, and furnishing and placing Portland cement concrete footings, and connecting new fences to structures and existing cross fences, and constructing temporary

fences for the protection of stock, shall be considered as included in the price paid for the fence and no additional compensation will be allowed therefor.

PAINT RED CURB:

Paint red curb (2 Coat) shall conform to Section 84 of the Standard Specifications and as directed by the Engineer.

Newly painted red curb shall be protected from damage by public traffic or other causes until the paint is thoroughly dry. Any newly painted red curb which are damaged as a result of the construction, including wheel markings by public traffic and the construction equipment, shall be repainted by the Contractor and any associated removals shall be performed as called for in these Special Provisions.

Payment

The contract price paid per linear foot for Paint Red Curb shall include full compensation for furnishing all labor, materials, tools, equipment, and incidentals, and for doing all the work involved and complete in place as shown on the plans, as specified in the Standard Specifications and these Special Provisions, and as directed by the Engineer

Appendix A

AQMD Recommendations

Dust Abatement Attachments

Table of Contents

AQMD SIGNAGE RECOMMENDATIONS

November, 2001

Plan holder shall post signage at specified locations on the subject property in accordance with the standards specified below. The exception to the standards is that all letters shall be 4 inches high, with the names and telephone numbers of appropriate contacts and services in bold print, as indicated in the standards. These signs shall also include the SCAQMD toll free complaint line 1-800-CUT-SMOG (1-800-288-7664) and the telephone number for the Environmental Observer. These signs shall be posted within 50 feet of the curb on all four (4) corners of the subject property.

For each Dust Control Plan aggregating less than, or equal to, ten (10) acres:

1. The applicant shall install a sign on such property which is visible to the public that meets the following requirements:

   (a) Such sign shall measure at least four (4) feet wide by four (4) feet high and conform to the specifications in 1 (a) below.

For each Dust Control Plan aggregating over ten (10) acres:

2. The applicant shall install a sign on such property which is visible to the public that meets the following requirements:

   (a) Such sign shall measure at least eight (8) feet wide by four (4) feet high and conform to the specifications in 1 (b) below.

THE SIGN SHALL CONFORM TO THE FOLLOWING REQUIREMENTS:

1. **The sign boards shall be constructed with materials capable of withstanding the environment in which they are placed.**

   (a) For 4' x 4' signs, the District recommends the following:

   I. ¾ " A/C laminated plywood board
   II. Two 4" x 4" posts
   III. The posts should be attached to the edges of the plywood board with at least 2 carriage bolts on each post.
   IV. The front surface of the sign board should be painted in the contrasting color of a white background with black lettering.

   (b) For 4' x 8' signs, the District recommends the following:

   I. 1" A/C laminated plywood board
   II. Two 5" x 6" posts
   III. The posts should be attached to the 4' edges of the plywood board with at least 2 carriage bolts on each post.
   IV. The front surface of the sign board should be painted in the contrasting color of a white background with black lettering.

2. **<u>The sign board shall be installed and maintained in a condition such that members of the public can easily view, access, and read the sign at all times until the expiration date of the Dust Control plan.</u>**

   (a) For 4' x 4' signs, the District recommends the following:
   - I. The lower edge of the sign board should be mounted at least 2' above the existing ground surface to facilitate ease of viewing.
   - II. The posts should be set in a hole at least 3' deep with concrete footings to preclude downing by high winds.
   - III. On the construction site, the sign should be positioned such that nothing obstructs the public's view from the primary street access point.
   - IV. For construction projects that are developed in phases, the sign should be moved to the area that is under active construction.
   - V. In situations where all phases of the construction project are completed on a property prior to expiration of the Dust Control Plan, a written request for cancellation of the Dust Control Plan must be submitted to the Engineer.

   (b) For 4' x 8' signs, the District recommends the following:
   - I. The lower edge of the sign board should be mounted at least 2' above the existing ground surface to facilitate ease of viewing.
   - II. The posts should be set in a hole at least 4' deep with concrete footings to preclude downing by high winds.
   - III. On the construction site, the sign should be positioned such that nothing obstructs the public's view from the primary street access point.
   - IV. For construction projects that are developed in phases, the sign should be moved to the area that is under active construction.
   - V. In situations where all phases of the construction project are completed on a property prior to expiration of the Dust Control Plan, a written request for cancellation of the Dust Control Plan must be submitted to the Engineer.

3. **The sign board shall contain the following information:**

   (a) Project Name
   (b) Name of Prime Contractor
   (c) Phone Number of Contractor's Employee Responsible for Dust Control Matters
   (d) County designated phone number (to be provided by the Engineer)
   (e) South Coast Air Quality Management District Phone Number

4. **The sign board shall be designed to the following alpha and numeric text dimensions (sign boards written in longhand are unacceptable).**

   (a) For a permittee subject to the 4' x 4' sign requirement, the District provides the following example: (as modified by the County of Riverside for use on County Public Works projects)

1" UPPERCASE Letters →	PROJECT NAME:		← 3 ½ " Title Case Bold Letters
1" UPPERCASE Letters →	CONTRACTOR		← 3 ½ " Title Case Bold Letters
1" Title Case Letters →	Contractor's Dust Control Phone #		← 3" Bold Numbers
1" Title Case Letters →	County of Riverside Phone #		← 3" Bold Numbers
1" Title Case Letters →	Phone Number:	**SCAQMD 1-800-CUT-SMOG**	← 3 ½ " Bold Numbers

"Title Case" means the first letter of a word is capitalized and subsequent letters are lower case.

(b) For a permittee subject to the 4' x 8' sign requirement, the District provides the following example: (as modified by the County of Riverside)

2" UPPERCASE Letters →	PROJECT NAME:		← 4" Title Case Bold Letters
2" UPPERCASE Letters →	CONTRACTOR		← 4" Title Case Bold Letters
2" Title Case Letters →	Contractor's Dust Control Phone #		← 4" Bold Numbers
2" Title Case Letters →	County of Riverside Phone #	**909-**	← 4" Bold Numbers
2" Title Case Letters →	Phone Number:	**SCAQMD 1-800-CUT-SMOG**	← 4 ½ " Bold Numbers
2" Title Case Letters →	**COUNTY OF RIVERSIDE TRANSPORTATION DEPARTMENT**		

Section 1

Simplified Sample Site Plan

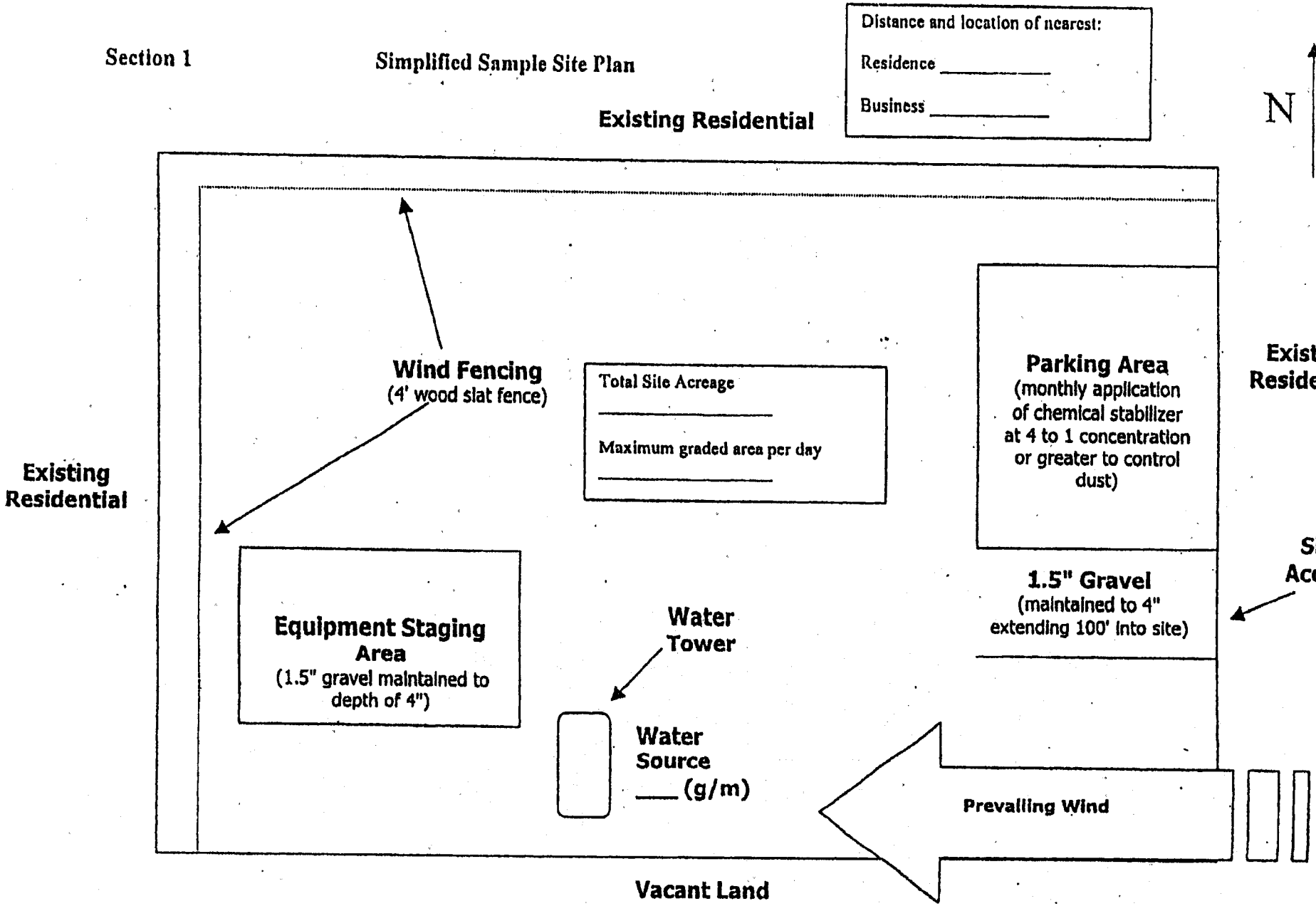

Remember...
DUST CONTROL IS REQUIRED 24 HOURS A DAY, 7 DAYS A WEEK, REGARDLESS OF CONSTRUCTION STATUS

Plan Review Checklist
Clearing/Grubbing/Mass Grading Phase

- [ ] If feasible, use grading permit conditions to break the project into phases so that only a portion of the site is disturbed at any given time to ensure control of fugitive dust. This technique is critical for project sites with greater than 100 acres.

- [ ] Prior to initiating activity, pre-water site through use of portable irrigation lines. At least 72 hours of pre-watering is recommended for each area prior to initiating earth-movement. Require the Applicant to specify water source and available flow rate (g/m).

- [ ] Water applied continuously to all disturbed portions of the site by means of water truck/water pull as necessary to maintain sufficient visible moisture on the soil surface. For reference, one 2,000 gallon water truck can treat approximately 4 acres of active construction per hour. Also, for cut and fill activities, one 10,000 gallon water pull is estimated to be necessary for each 7,000 cubic yards of daily earth-movement. Multiple 4,000-gallon water trucks may be used in place of one 10,000-gallon water pull. Touch and visual contrast are reasonably good indicators of soil moisture. Surface areas that are dry to the touch and appear lighter-colored require the application of additional water to prevent visible or fugitive dust. Require the Applicant to specify the number of watering vehicles available for dust control during mass grading and during off-hours as well as availability of back-up water trucks if the site experiences dust control problems.

- [ ] Water towers are necessary for projects with more than 10 acres of active construction. Without a water tower, it can take up to 30 minutes to fill a 2,000 gallon water truck. Also, multiple water towers are necessary for projects that use water pulls as filling one 10,000 gallon water pull can drain a water tower which takes up to 40 minutes to refill.

- [ ] Wind fencing is necessary between the site and nearby residences or businesses. Off-site upwind fencing and on-site wind fencing for larger projects can also keep blowsand from being deposited onto the site or traveling through the site.

- [ ] A perimeter watering system consisting of portable irrigation equipment may be an effective mitigation system to protect surrounding residences and businesses. The portable watering system may be used in place of or in conjunction with watering trucks. The local jurisdiction may also be provided access to this equipment.

Remember...
DUST CONTROL IS REQUIRED 24 HOURS A DAY, 7 DAYS A WEEK, REGARDLESS OF CONSTRUCTION STATUS

AQMD Recommendations

- [ ] Construction site accesses are to be improved with 1.5" gravel maintained to a depth of 4", at least 20' wide, and extending 100 feet into the site. If the project site is not balanced, a wheel washing system and/or ribbed steel plates should be placed in the roadway before the vehicle enters the graveled area to clean the tires and prevent trackout.

- [ ] Equipment staging areas are to be treated with 1.5" gravel maintained to a depth of 4".

- [ ] Employee parking areas are to be covered with 1.5" gravel maintained to a depth of 4" or treated with chemical dust suppressants at a 4 to 1 ratio on at least a monthly basis to prevent fugitive dust.

- [ ] Chemical dust suppressants are to be mixed at a ratio of 20 to 1 and applied to all disturbed surfaces that are proposed to remain inactive for a period of at least 10 consecutive days. These products are effective in preventing and controlling dust. Recordkeeping is necessary to demonstrate compliance.

- [ ] All project sites greater than 100 acres shall monitor daily wind speeds and AQMD forecasted wind events (call 1.800.CUT.SMOG, press one for air quality information, and then press five for Coachella Valley wind forecasts). Operators shall maintain these records for review by any local code enforcement officer or AQMD inspector.

- [ ] An environmental observer whose primary duty is to oversee dust control at the site is to be used for construction projects greater than 100 acres and/or sites with more than 50 acres of active construction. The environmental observer is tasked with monitoring dust abatement measures and authorized to deploy additional water trucks and other dust control actions (i.e.. wind fencing, street sweepers, chemical dust suppressants, etc.) as necessary to prevent or control fugitive dust.

- [ ] Other (specify):_____

Remember...
DUST CONTROL IS REQUIRED 24 HOURS A DAY, 7 DAYS A WEEK, REGARDLESS OF CONSTRUCTION STATUS

Plan Review Checklist
Finish Grading Phase

☐ Water applied continuously to all disturbed portions of the site by means of water truck/water pull as necessary to maintain sufficient visible moisture on the soil surface. For reference, one 2,000 gallon water truck can treat approximately 4 acres of active construction per hour. Also, for cut and fill activities, one 10,000 gallon water pull is estimated to be necessary for each 7,000 cubic yards of daily earth-movement. Multiple 4,000-gallon water trucks may be used in place of a 10,000-gallon water pull. Touch and visual contrast are reasonably good indicators of soil moisture. Surface areas that are dry to the touch and appear lighter-colored require the application of additional water to prevent visible or fugitive dust. Require the Applicant to specify the number of watering vehicles available for dust control during finish grading and during off-hours as well as availability of back-up water trucks if the site experiences dust control problems.

☐ Water towers are necessary for projects with more than 10 acres of active construction. Without a water tower, it can take up to 30 minutes to fill a 2,000 gallon water truck. Also, multiple water towers are necessary for projects that use water pulls as filling one 10,000 gallon water pull can drain a water tower which takes up to 40 minutes to refill.

☐ Wind fencing is necessary between the site and nearby residences or businesses to reduce fugitive dust. Off-site upwind fencing and on-site wind fencing for larger projects can also keep blowsand from being deposited onto the site or traveling through a site.

☐ Chemical dust suppressants are to be applied at a concentration of at least 10 to 1 to finish graded areas once final elevations have been reached. For areas that will remain inactive for longer periods, vegetation can be a cost-effective alternative to chemical stabilization. Wind fencing or other obstructions can keep the stabilized area free from future disturbances.

☐ Construction site access(es) are to be improved with 1.5" gravel maintained to a depth of at least 4" .with a minimum width of at least 20', extending 100 feet into the project site.

☐ Equipment staging areas are to be treated with 1.5" gravel maintained to a depth of 4".

☐ Internal roadway networks are to be treated with chemical dust suppressants at a minimum rate of at least 4 to 1 and retreated on a monthly basis once final roadway elevations have been reached.

☐ Employee parking areas are to be treated with chemical dust suppressants at a mix ratio of at least 4 to 1 and retreated on at least a monthly basis or covered with 1.5" gravel maintained to a depth of 4" to prevent fugitive dust.

☐ Other (specify):_____

_____

_____

_____

Remember...
DUST CONTROL IS REQUIRED 24 HOURS A DAY, 7 DAYS A WEEK, REGARDLESS OF CONSTRUCTION STATUS

Plan Review Checklist
Construction Phase

☐ Water applied continuously to all disturbed portions of the site by means of water truck/water pull is necessary to maintain sufficient visible moisture on the soil surface. For reference, one 2,000 gallon water truck can treat approximately 4 acres of active construction per hour. Touch and visual contrast are reasonably good indicators of soil moisture. Surface areas that are dry to the touch and appear lighter-colored require the application of additional water to prevent visible or fugitive dust. Require the Applicant to specify the number of watering vehicles available for dust control during the construction phase and during off-hours as well as availability of back-up water trucks if the site experiences dust control problems.

☐ Wind fencing is necessary between the site and nearby residences or businesses. Off-site upwind fencing and on-site wind fencing for larger projects can also keep blowsand from being deposited onto the site or traveling through the site. Block walls, if part of the final project, can replace wind fencing during the construction phase.

☐ Chemical dust suppressants are to be applied at a concentration of at least 20 to 1 to finish graded areas once final elevations have been reached. For areas that will remain inactive for longer periods, vegetation can be a cost-effective alternative to chemical stabilization. Wind fencing or other obstructions can keep the stabilized area free from future disturbances.

☐ Construction site accesses are to be improved with 1.5" gravel, maintained to a depth of 4", with a width of at least 20', extending 100' into the project site. Paving internal roadways can substitute for gravel.

☐ Internal roadway networks are to be paved as early as feasible in the construction phase. Street sweeping of internal and/or external access roads will likely be required to control entrained road dust.

☐ Employee parking areas are to be treated with chemical dust suppressants at a mix ratio of no less than 4 to 1 and retreated on a monthly basis, or more frequently if fugitive dust is observed. If internal roadway is complete, employees are to be instructed to park on paved roads.

☐ Other (specify):_____

Remember...
DUST CONTROL IS REQUIRED 24 HOURS A DAY, 7 DAYS A WEEK, REGARDLESS OF CONSTRUCTION STATUS

REASONABLY AVAILABLE CONTROL MEASURES

Paragraph (d)(3) of Rule 403 allows activities outside the South Coast Air Basin (see Figure 2-1) to implement reasonably available control measures in lieu of best available control measures. Additionally, as specified by subparagraph (f)(3)(D) of Rule 403, any person seeking approval of a fugitive dust emissions control plan for projects outside the South Coast Air Basin must demonstrate to the satisfaction of the District that the given activity is employing all reasonably available fugitive dust control measures.

The District has prepared the attached listing of reasonably available fugitive dust control measures for a variety of source categories. This list is based on the U.S. Environmental Protection Agency's reference document entitled, "Control of Open Fugitive Dust Sources," Midwest Research Institute, September 1988.

The District encourages the use of those dust control measures that minimize the use of potable water. When water is needed, reclaimed water should be utilized to the greatest extent feasible.

REASONABLY AVAILABLE CONTROL MEASURES

The left column contains a listing of the sources of fugitive dust which are intended for emission control under District Rule 403 and a listing of control measures and high-wind measures. The right column contains a description of the reasonably available fugitive dust control measures for each of the sources.

Source: (1) Land Clearing/Earth-Moving

CONTROL MEASURES	DESCRIPTION
(A) Watering	(1) Application of water by means of trucks, hoses and/or sprinklers prior to conducting any land clearing. This will increase the moisture content of the soils; thereby increasing its stability. (2) Pre-application of water to depths of proposed cuts. (3) Once the land clearing/earth moving activities are complete, a second application of water can generate a thin crust that stabilizes the disturbed surface area provided that it is not disturbed. (Security fencing can be used to prevent unwanted future disturbances of sites where a surface crust has been created).
(B) Chemical stabilizers	(1) Only effective in areas which are not subject to daily disturbances. (2) Vendors can supply information on product application and required concentrations to meet the specifications established by the Rule.
(C) Wind fencing	(1) Three- to five-foot barriers with 50% or less porosity located adjacent to roadways or urban areas can be effective in reducing the amount of windblown material leaving a site. (2) Would likely be used in conjunction with other measures (e.g., watering, chemical stabilization, etc.) to ensure that visible emissions do not cross a property line.
(D) Cover haul vehicles	(1) Entire surface area of hauled earth should be covered once vehicle is full.
(E) Bedliners in haul vehicles	(1) When feasible, use in bottom-dumping haul vehicles.

HIGH WIND MEASURE

(a) Cease all active operations; or
(b) Apply water within 15 minutes to any soil surface which is being moved or otherwise disturbed.

Source: (2) Unpaved Roads

CONTROL MEASURES	DESCRIPTION
(F) Paving	(1) Requires street sweeping/cleaning if subject to material accumulation.
(G) Chemical stabilization	(1) Vendors can supply information as to application methods and concentrations to meet the specifications established by the Rule (2) Not recommended for high volume or heavy equipment traffic use.
(H) Watering	(1) In sufficient quantities to keep surface moist. (2) Required application frequency will vary according to soil type, weather conditions, and vehicular use.
(I) Reduce speed limits	(1) 15 mile per hour maximum. May need to be used in conjunction with watering or chemical stabilization to prevent visible emissions from crossing the property line.
(J) Reduce vehicular trips	(1) Access restriction or redirecting traffic to reduce vehicle trips by a minimum of 60 percent.
(K) Gravel	(1) Gravel maintained to a depth of four inches can be an effective measure. (2) Should only be used in areas where paving, chemical stabilization or frequent watering is not feasible.

HIGH WIND MEASURE

(c) Apply a chemical stabilizer (to meet the specifications established by the Rule) prior to wind events; or
(d) Apply water once each hour; or
(e) Stop all vehicular traffic.

Source: (3) Storage Piles

CONTROL MEASURES	DESCRIPTION
(L) Wind sheltering	(1) Enclose in silos. (2) Install three-sided barriers equal to height of material, with no more than 50 percent porosity.
(M) Watering	(1) Application methods include: spray bars, hoses and water trucks. (2) Frequency of application will vary on site-specific conditions.
(N) Chemical stabilizers	(1) Best for use on storage piles subject to infrequent disturbances.
(O) Altering load-in/load-out procedures	(1) Confine load-in/load-out procedures to leeward (downwind) side of the material. (2) May need to be used in conjunction with wind sheltering to prevent visible emissions from crossing the property line.
(P) Coverings	(1) Tarps, plastic, or other material can be used as a temporary covering. (2) When used, these should be anchored to prevent wind from removing coverings.

HIGH WIND MEASURE

(f) Apply chemical stabilizers (to meet the specifications established by the Rule) prior to wind events; or
(g) Apply water once per hour; or
(h) Install temporary covers.

Source: (4) Paved Road Track-Out

CONTROL MEASURES	DESCRIPTION
(Q) Chemical stabilization	(1) Most effective when used on areas where active operations have ceased. (2) Vendors can supply information on methods for application and required concentrations.
(R) Sweep/clean roadways	(1) Either sweeping or water flushing may be used.
(S) Cover haul vehicles	(1) Entire surface area should be covered once vehicle is full.
(T) Bedliners in haul vehicles	(1) When feasible, use in bottom dumping vehicles.
(U) Site access improvement	(1) Pave internal roadway system. (2) Most important segment, last 100 yards from the connection with paved public roads

HIGH WIND MEASURE

(i) Cover all haul vehicles; and
(j) Clean streets with water flushing, unless prohibited by the Regional Water Quality Control Board.

Source: (5) Disturbed Surface Areas/ Inactive Construction Sites

CONTROL MEASURES	DESCRIPTION
(Q) Chemical stabilization	(1) Most effective when used on areas where active operations have ceased. (2) Vendors can supply information on methods for application and required concentrations.
(R) Watering	(1) Requires frequent applications unless a surface crust can be developed.
(S) Wind fencing	(1) Three- to five-foot barriers with 50% or less porosity adjacent to roadways or urban areas can be effective in reducing the amount of wind blown material leaving a site.
(T) Vegetation	(1) Establish as quickly as possible when active operations have ceased. (2) Use of drought tolerant, native vegetation is encouraged.

HIGH WIND MEASURES

(k) Apply chemical stabilizers (to meet the specifications established by the Rule); or
(l) Apply water to all disturbed surface areas 3 times per day.

BEST AVAILABLE CONTROL MEASURES

Rule 403, paragraph (d)(2) requires active operations [defined in Rule 403, paragraph (c)(1)] within the South Coast Air Basin (see Figure 2-1) to implement at least one best available control measure for each fugitive dust source type on site. Additionally, as specified by subparagraph (f)(3)(D) of Rule 403, any person seeking approval of a fugitive dust emissions control plan for projects within the South Coast Air Basin must demonstrate to the satisfaction of the AQMD that the given activity is employing all best available fugitive dust control measures.

The AQMD has prepared the attached listing of best available fugitive dust control measures for a variety of source categories. This list is based on the U.S. Environmental Protection Agency's reference document entitled, "Fugitive Dust Background Document and Technical Information Document for Best Available Control Measures," Office of Air and Radiation, September 1992.

The AQMD encourages the use of those dust control measures that minimize the use of potable water. When water is needed, reclaimed water should be utilized to the greatest extent feasible.

BEST AVAILABLE CONTROL MEASURES

The left column contains a listing of the sources of fugitive dust which are intended for emission control under District Rule 403 and a listing of control measures and high-wind measures. The right column contains a description of the best available fugitive dust control measures for each of the sources.

Source: (1) Land Clearing/Earth-Moving

CONTROL MEASURES	DESCRIPTION
(A) Watering (pre-grading)	(1) Application of water by means of trucks, hoses and/or sprinklers prior to conducting any land clearing. This will increase the moisture content of the soils; thereby increasing its stability. (2) Pre-application of water to depths of proposed cuts.
(A-1) Watering (post-grading)	(1) In active earth-moving areas water should be applied at sufficient frequency and quantity to prevent visible emissions from extending more than 100 feet from the point of origin.
(A-2) Pre-grading planning	(1) Grade each phase separately, timed to coincide with construction phase; or (2) Grade entire project, but apply chemical stabilizers or ground cover to graded areas where construction phase begins more than 60 days after grading phase ends.
(B) Chemical stabilizers	(1) Only effective in areas which are not subject to daily disturbances. (2) Vendors can supply information on product application and required concentrations to meet the specifications established by the Rule.
(C) Wind fencing	(1) Three- to five-foot barriers with 50% or less porosity located adjacent to roadways or urban areas can be effective in reducing the amount of windblown material leaving a site. Must be implemented in conjunction with either measure (A-1) or (B).
(D) Cover haul vehicles	(1) Entire surface area of hauled earth should be covered once vehicle is full.
(E) Bedliners in haul vehicles	(1) When feasible, use in bottom-dumping haul vehicles.

HIGH WIND MEASURE

(a) Cease all active operations; or
(b) Apply water within 15 minutes to any soil surface which is being moved or otherwise disturbed.

Source: (2). Unpaved Roads

CONTROL MEASURES	DESCRIPTION
(F) Paving	(1) Requires street sweeping/cleaning if subject to material accumulation.
(G) Chemical stabilization	(1) Vendors can supply information as to application methods and concentrations to meet the specifications established by the Rule (2) Not recommended for high volume or heavy equipment traffic use.
(H) Watering	(1) In sufficient quantities to keep surface moist. (2) Required application frequency will vary according to soil type, weather conditions, and vehicular use.
(I) Reduce speed limits	(1) 15 mile per hour maximum. May need to be used in conjunction with watering or chemical stabilization to prevent visible emissions from crossing the property line.
(J) Reduce vehicular trips	(1) Access restriction or redirecting traffic to reduce vehicle trips by a minimum of 60 percent.
(K) Gravel	(1) Gravel maintained to a depth of four inches can be an effective measure. (2) Should only be used in areas where paving, chemical stabilization or frequent watering is not feasible.

HIGH WIND MEASURE

(a) Apply a chemical stabilizer (to meet the specifications established by the Rule) prior to wind events; or
(b) Apply water once each hour; or
(c) Stop all vehicular traffic.

Source: (3) Storage Piles

CONTROL MEASURES	DESCRIPTION
(L) Wind sheltering	(1) Enclose in silos. (2) Install three-sided barriers equal to height of material, with no more than 50 percent porosity.
(M) Watering	(1) Application methods include: spray bars, hoses and water trucks. (2) Frequency of application will vary on site-specific conditions.
(N) Chemical stabilizers	(1) Best for use on storage piles subject to infrequent disturbances.
(O) Altering load-in/load-out procedures	(1) Confine load-in/load-out procedures to leeward (downwind) side of the material. Must be used in conjunction with either measure (L), (M), (N), or (P).
(P) Coverings	(1) Tarps, plastic, or other material can be used as a temporary covering. (2) When used, these should be anchored to prevent wind from removing coverings.

HIGH WIND MEASURE

(a) Apply chemical stabilizers (to meet the specifications established by the Rule) prior to wind events; or
(b) Apply water once per hour; or
(c) Install temporary covers.

Source: (4) Paved Road Track-Out

CONTROL MEASURES	DESCRIPTION
Compliance with District Rule 403.	Paragraph (d)(5).

Source: (5) Disturbed Surface Areas/ Inactive Construction Sites

CONTROL MEASURES	DESCRIPTION
(Q) Chemical stabilization	(1) Most effective when used on areas where active operations have ceased. (2) Vendors can supply information on methods for application and required concentrations.
(R) Watering	(1) Requires frequent applications unless a surface crust can be developed.
(S) Wind fencing	(1) Three- to five-foot barriers with 50% or less porosity adjacent to roadways or urban areas can be effective in reducing the amount of wind blown material leaving a site. Must be used in conjunction with either measure (Q), (R), or (T).
(T) Vegetation	(1) Establish as quickly as possible when active operations have ceased.*

HIGH WIND MEASURES

(a) Apply chemical stabilizers (to meet the specifications established by the Rule); or
(b) Apply water to all disturbed surface areas 3 times per day.

* Use of drought tolerant, native vegetation is encouraged.

TABLE 1

BEST [REASONABLY]* AVAILABLE CONTROL MEASURES FOR HIGH WIND CONDITIONS

FUGITIVE DUST SOURCE CATEGORY	CONTROL MEASURES
Earth-moving	(1A) Cease all active operations; OR (2A) Apply water to soil not more than 15 minutes prior to moving such soil.
Disturbed surface areas	(0B) On the last day of active operations prior to a weekend, holiday, or any other period when active operations will not occur for not more than four consecutive days: apply water with a mixture of chemical stabilizer diluted to not less than 1/20 of the concentration required to maintain a stabilized surface for a period of six months; OR (1B) Apply chemical stabilizers prior to wind event; OR (2B) Apply water to all unstabilized disturbed areas 3 times per day. If there is any evidence of wind driven fugitive dust, watering frequency is increased to a minimum of four times per day; OR (3B) Take the actions specified in Table 2, Item (3c); OR (4B) Utilize any combination of control actions (1B), (2B), and (3B) such that, in total, these actions apply to all disturbed surface areas.
Unpaved roads	(1C) Apply chemical stabilizers prior to wind event; OR (2C) Apply water twice [once] per hour during active operation; OR (3C) Stop all vehicular traffic.
Open storage piles	(1D) Apply water twice [once] per hour; OR (2D) Install temporary coverings.
Paved road track-out	(1E) Cover all haul vehicles; OR (2E) Comply with the vehicle freeboard requirements of Section 23114 of the California Vehicle Code for both public and private roads.
All Categories	(1F) Any other control measures approved by the Executive Officer and the U.S. EPA as equivalent to the methods specified in Table 1 may be used.

* Measures in [brackets] are reasonably available control measures and only apply to sources not within the South Coast Air Basin.

TABLE 2
DUST CONTROL ACTIONS FOR EXEMPTION FROM PARAGRAPH (d)(4)*

FUGITIVE DUST SOURCE CATEGORY	CONTROL ACTIONS	
Earth-moving (except construction cutting and filling areas, and mining operations)	(1a)	Maintain soil moisture content at a minimum of 12 percent, as determined by ASTM method D-2216, or other equivalent method approved by the Executive Officer, the California Air Resources Board, and the U.S. EPA. Two soil moisture evaluations must be conducted during the first three hours of active operations during a calendar day, and two such evaluations each subsequent four-hour period of active operations; OR
	(1a-1)	For any earth-moving which is more than 100 feet from all property lines, conduct watering as necessary to prevent visible dust emissions from exceeding 100 feet in length in any direction.
Earth-moving: Construction fill areas:	(1b)	Maintain soil moisture content at a minimum of 12 percent, as determined by ASTM method D-2216, or other equivalent method approved by the Executive Officer, the California Air Resources Board, and the U.S. EPA. For areas which have an optimum moisture content for compaction of less than 12 percent, as determined by ASTM Method 1557 or other equivalent method approved by the Executive Officer and the California Air Resources Board and the U.S. EPA, complete the compaction process as expeditiously as possible after achieving at least 70 percent of the optimum soil moisture content. Two soil moisture evaluations must be conducted during the first three hours of active operations during a calendar day, and two such evaluations during each subsequent four-hour period of active operations.

* Measures in [brackets] are reasonably available control measures and only apply to sources not within the South Coast Air Basin.

TABLE 2 (Continued)*

FUGITIVE DUST SOURCE CATEGORY	CONTROL ACTIONS	
Earth-moving: Construction cut areas and mining operations:	(1c)	Conduct watering as necessary to prevent visible emissions from extending more than 100 feet beyond the active cut or mining area unless the area is inaccessible to watering vehicles due to slope conditions or other safety factors.
Disturbed surface areas (except completed grading areas)	(2a/b)	Apply dust suppression in sufficient quantity and frequency to maintain a stabilized surface. Any areas which cannot be stabilized, as evidenced by wind driven fugitive dust must have an application of water at least twice per day to at least 80 [70] percent of the unstabilized area.
Disturbed surface areas: Completed grading areas	(2c)	Apply chemical stabilizers within five working days of grading completion; OR
	(2d)	Take actions (3a) or (3c) specified for inactive disturbed surface areas.
Inactive disturbed surface areas	(3a)	Apply water to at least 80 [70] percent of all inactive disturbed surface areas on a daily basis when there is evidence of wind driven fugitive dust, excluding any areas which are inaccessible to watering vehicles due to excessive slope or other safety conditions; OR
	(3b)	Apply dust suppressants in sufficient quantity and frequency to maintain a stabilized surface; OR
	(3c)	Establish a vegetative ground cover within 21 [30] days after active operations have ceased. Ground cover must be of sufficient density to expose less than 30 percent of unstabilized ground within 90 days of planting, and at all times thereafter; OR
	(3d)	Utilize any combination of control actions (3a), (3b), and (3c) such that, in total, these actions apply to all inactive disturbed surface areas.

* Measures in [brackets] are reasonably available control measures and only apply to sources not within the South Coast Air Basin.

TABLE 2 (Continued)*

FUGITIVE DUST SOURCE CATEGORY	CONTROL ACTIONS	
Unpaved Roads	(4a)	Water all roads used for any vehicular traffic at least once per every two hours of active operations [3 times per normal 8 hour work day]; OR
	(4b)	Water all roads used for any vehicular traffic once daily and restrict vehicle speeds to 15 miles per hour; OR
	(4c)	Apply a chemical stabilizer to all unpaved road surfaces in sufficient quantity and frequency to maintain a stabilized surface.
Open storage piles	(5a)	Apply chemical stabilizers; OR
	(5b)	Apply water to at least 80 [70] percent of the surface area of all open storage piles on a daily basis when there is evidence of wind driven fugitive dust; OR
	(5c)	Install temporary coverings; OR
	(5d)	Install a three-sided enclosure with walls with no more than 50 percent porosity which extend, at a minimum, to the top of the pile.
All Categories	(6a)	Any other control measures approved by the Executive Officer and the U.S. EPA as equivalent to the methods specified in Table 2 may be used.

* Measures in [brackets] are reasonably available control measures and only apply to sources not within the South Coast Air Basin.

AQMD Recommendations

TABLE 3

TRACK-OUT CONTROL OPTIONS

PARAGRAPH (d)(5)(B)

CONTROL OPTIONS

(1)	Pave or apply chemical stabilization at sufficient concentration and frequency to maintain a stabilized surface starting from the point of intersection with the public paved surface, and extending for a centerline distance of at least 100 feet and a width of at least 20 feet.
(2)	Pave from the point of intersection with the public paved road surface, and extending for a centerline distance of at least 25 feet and a width of at least 20 feet, and install a track-out control device immediately adjacent to the paved surface such that exiting vehicles do not travel on any unpaved road surface after passing through the track-out control device.
(3)	Any other control measures approved by the Executive Officer and the U.S. EPA as equivalent to the methods specified in Table 3 may be used.

Appendix B

Reference Drawings

DIST	COUNTY	ROUTE	POST MILES TOTAL PROJECT	SHEET NO.	TOTAL SHEETS

REGISTERED CIVIL ENGINEER

May 1, 2006
PLANS APPROVAL DATE

The State of California or its officers or agents shall not be responsible for the accuracy or completeness of electronic copies of this plan sheet.

To get to the Caltrans web site, go to: http://www.dot.ca.gov

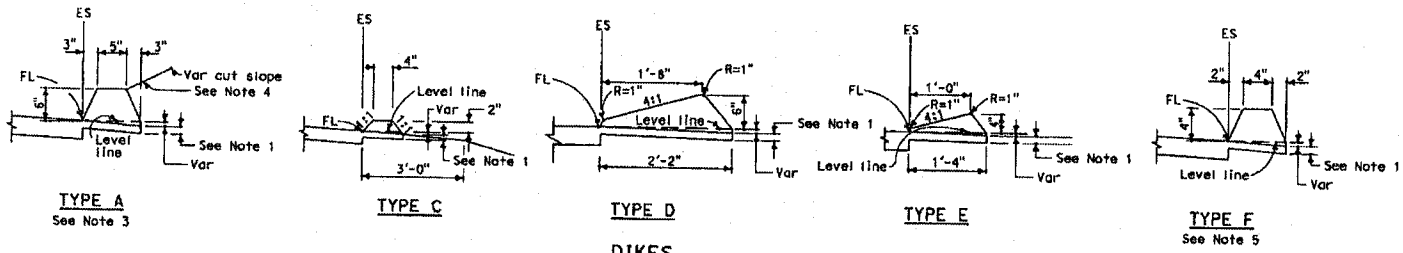

DIKES

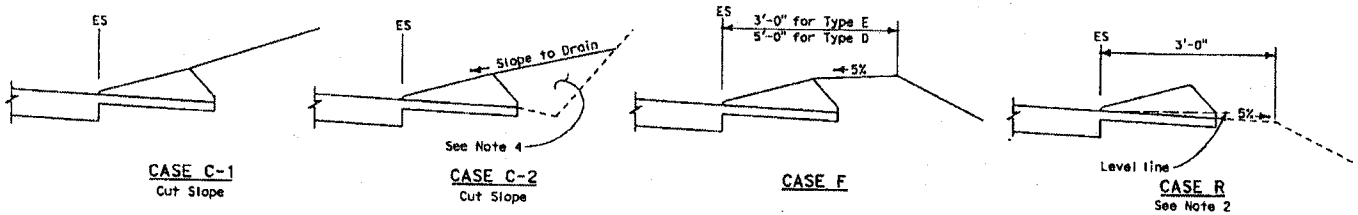

TYPE D AND E BACKFILL DETAILS

NOTES:

1. For AC shoulders only, extend top layer of AC placed on the shoulder under dike with no joint at the ES.
2. Case R applies to retrofit only projects where restrictive conditions do not provide enough width for Case F backfill.
3. Type A dike only to be used where restrictive slope conditions do not provide enough width to use Type D or Type E dike.
4. Fill and compact with excavated material to top of dike.
5. Use Type F dike, where dike is required with guard railing installations. See Standard Plan A77C4 for dike positioning details.

DIKE QUANTITIES

TYPE	CUBIC YARDS PER LINEAR FOOT
A	0.0135
C	0.0038
D	0.0293
E	0.0130
F	0.0066

Quantities based on 5% cross slope.

STATE OF CALIFORNIA
DEPARTMENT OF TRANSPORTATION

ASPHALT CONCRETE DIKES

NO SCALE

A87B

2006 STANDARD PLAN A87B

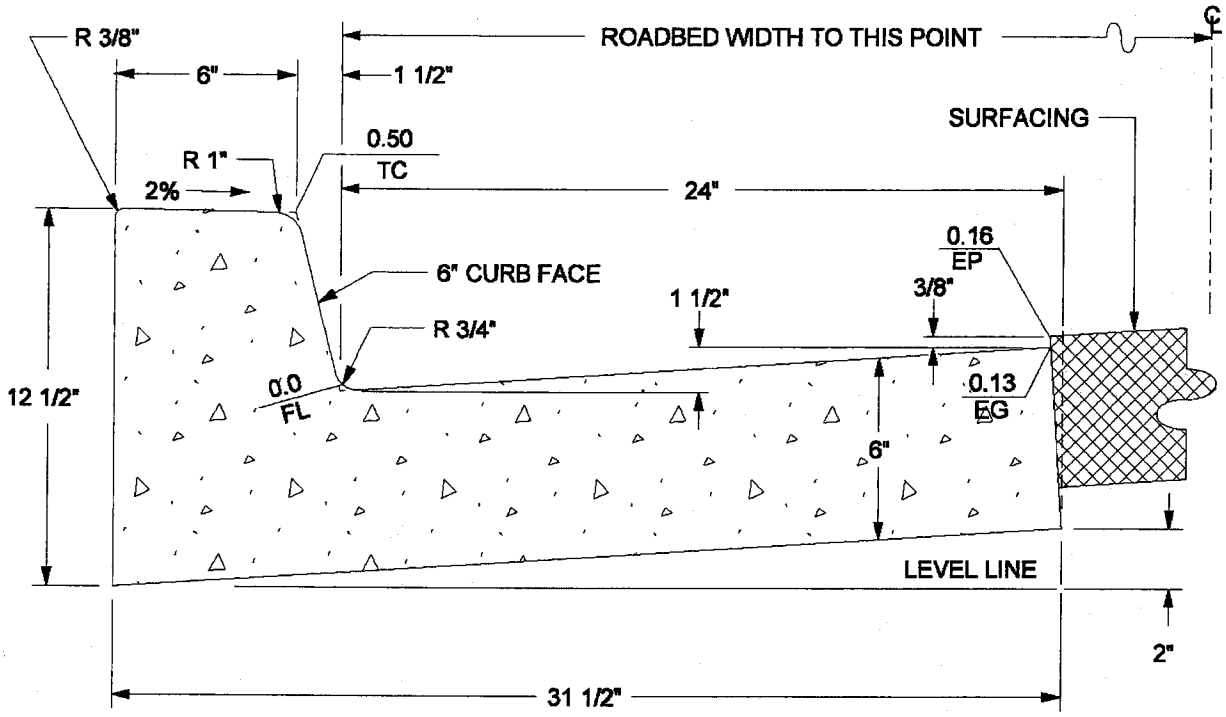

CLASS "B" CONCRETE

1.601 CU. FT. / L.F.

1 CU. YD. = 16.86 L.F.

ABBREVIATIONS:

TC = TOP OF CURB
FL = FLOWLINE
EG = EDGE OF GUTTER
EP = EDGE OF PAVEMENT

APPROVED BY:

DATE: 05/01/07

DIRECTOR OF TRANSPORTATION
GEORGE A. JOHNSON, RCE 42328

REGISTERED PROFESSIONAL ENGINEER GEORGE A. JOHNSON No. CE 42328 Exp. 3-31-08 CIVIL STATE OF CALIFORNIA

COUNTY OF RIVERSIDE

TYPE A-6 CURB

STANDARD NO. 200

REVISIONS		REV.	BY:	APR'D	DATE	REV.	BY:	APR'D	DATE
8-71, 9-88		1				4			
2-90, 11-04		2				5			
		3				6			

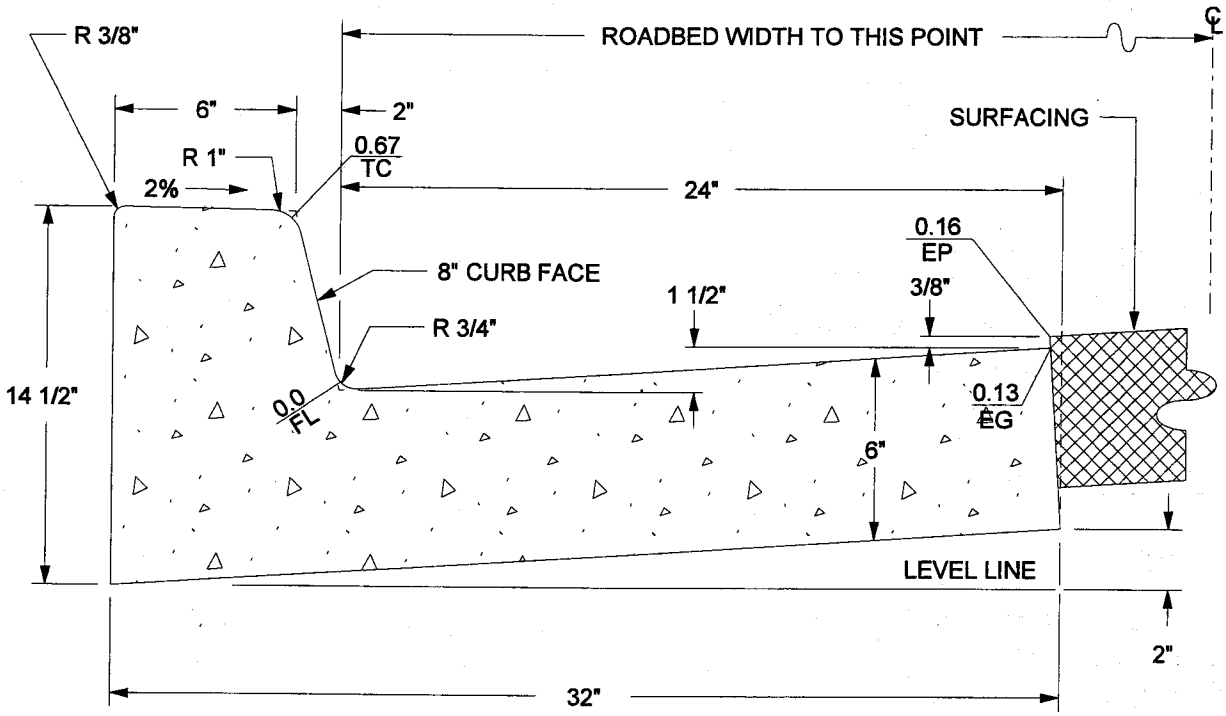

CLASS "B" CONCRETE

1.73 CU. FT. / L.F.

1 CU. YD. = 15.60 L.F.

ABBREVIATIONS:

TC = TOP OF CURB
FL = FLOWLINE
EG = EDGE OF GUTTER
EP = EDGE OF PAVEMENT

APPROVED BY:

DATE: 05/01/07

DIRECTOR OF TRANSPORTATION
GEORGE A. JOHNSON, RCE 42328

REGISTERED PROFESSIONAL ENGINEER GEORGE A. JOHNSON No. CE 42328 Exp. 3-31-08 CIVIL STATE OF CALIFORNIA

COUNTY OF RIVERSIDE

TYPE A-8 CURB

STANDARD NO. 201

REVISIONS		REV.	BY:	APR'D	DATE	REV.	BY:	APR'D	DATE
8-71, 9-88		1				4			
2-90, 11-04		2				5			
		3				6			

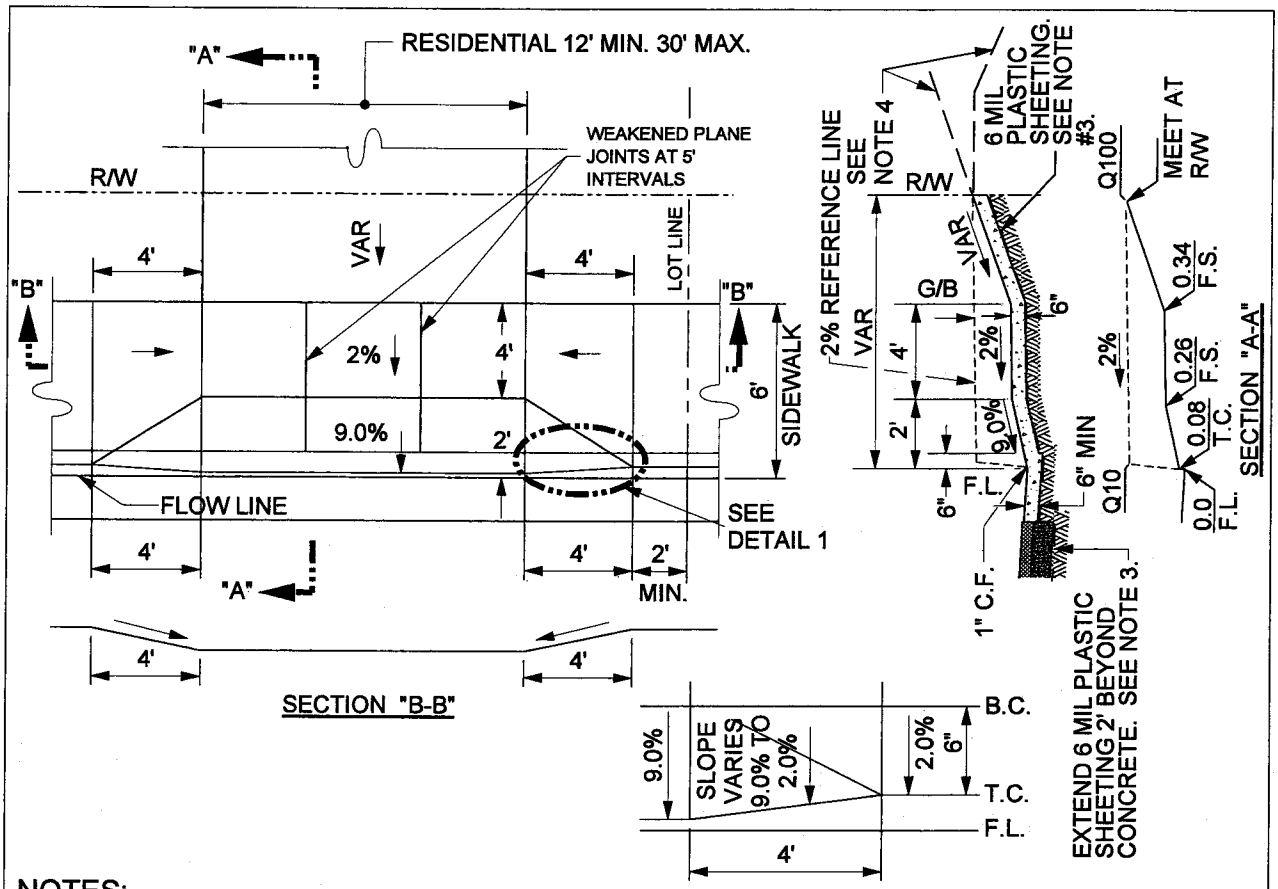

NOTES:

1. ALL CONSTRUCTION SHALL BE CLASS "3" CONCRETE.
2. 20' OF FULL-HEIGHT CURB REQUIRED BETWEEN DRIVEWAYS WITHIN ANY ONE PROPERTY FRONTAGE.
3. USE 6 MIL PLASTIC SHEETINGWHEN ABUTTING SOIL HAS A HIGH SULFATE CONTENT, SPECIAL CONSIDERATIONS ARE REQUIRED. SEE SPECIFICATIONS (SECTION 16.04).
4. CONSTRUCT THE PROFILE GRADE OF THE PRIVATE ON-SITE DRIVEWAY SO THAT IT PROVIDES SMOOTH VEHICLE ACCESS OVER THE DRIVE APPROACH.

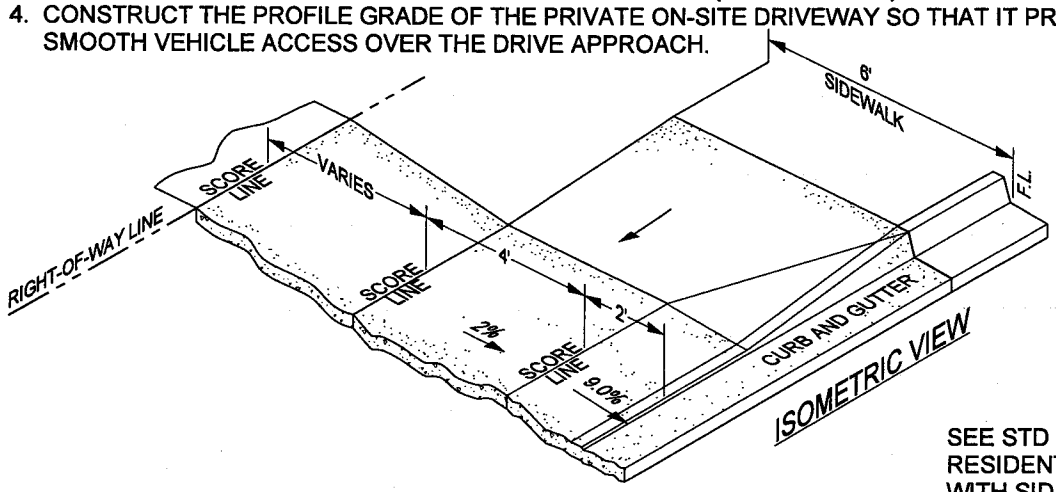

SEE STD NO. 213 FOR RESIDENTIAL DRIVEWAY WITH SIDEWALK AT R/W

NOT TO SCALE

APPROVED BY:

DATE: 11/15/04

DIRECTOR OF TRANSPORTATION
GEORGE A. JOHNSON, RCE 42328

REGISTERED PROFESSIONAL ENGINEER GEORGE A. JOHNSON No. CE 42328 Exp. 3-31-06 CIVIL STATE OF CALIFORNIA

COUNTY OF RIVERSIDE

RESIDENTIAL DRIVEWAY WITH SIDEWALK AT CURB

STANDARD NO. 207

REVISIONS		REV.	BY:	APR'D	DATE	REV.	BY:	APR'D	DATE
8-71, 8-77	11-04	1				4			
5-80, 2-82		2				5			
2-90, 12-97		3				6			

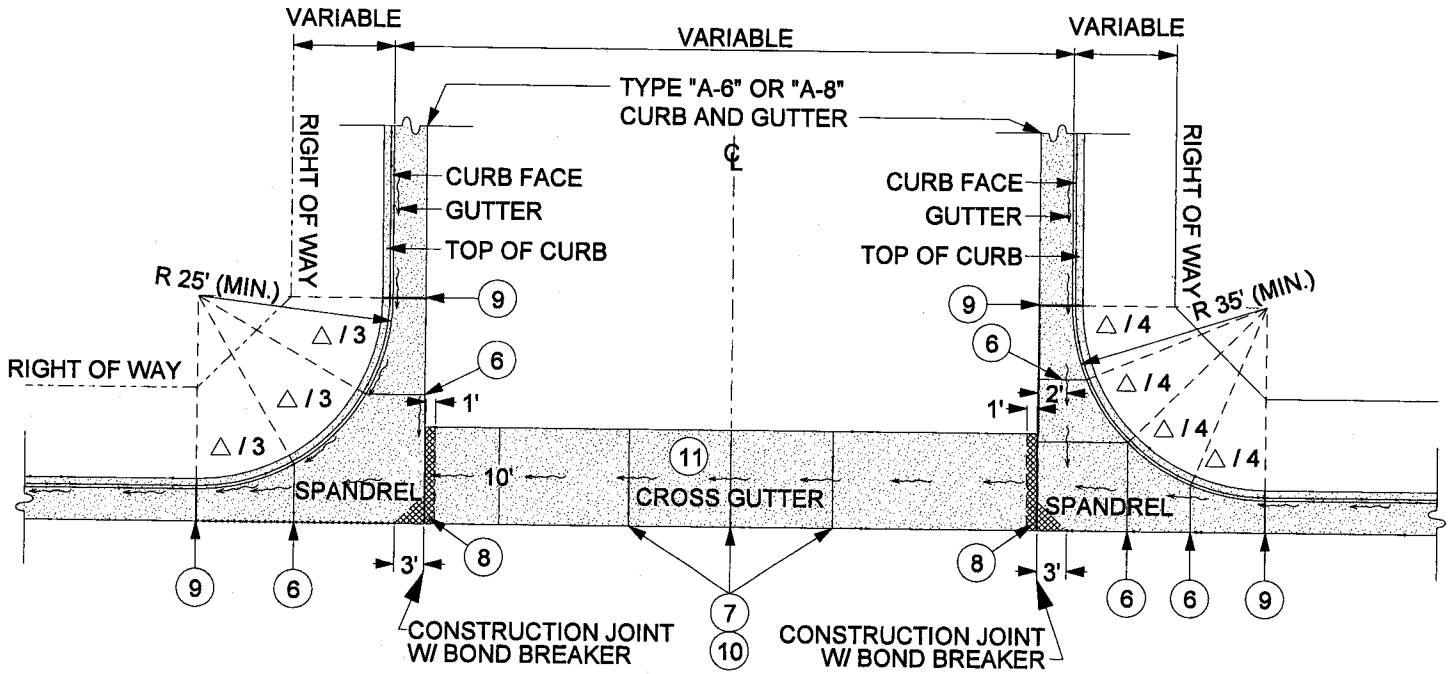

NOT TO SCALE

1. CROSS GUTTER FOR USE WITH TYPES "A-6" AND "A-8" CURB.
2. APRON THICKNESS TO BE 8" MINIMUM.
3. CROSS GUTTER THICKNESS TO BE 8" MINIMUM.
4. CLASS "A" CONCRETE.
5. PLACE MIN. 6" BASE UNDER ENTIRE SPANDREL AND CROSS GUTTER AREA.
6. WEAKENED PLANE JOINTS TO BE CONSTRUCTED AT 1/3 POINTS ON 25' RADIUS SPANDRELS, AND AT 1/4 POINTS ON 35' RADIUS SPANDRELS.
7. CONSTRUCT WEAKENED PLANE JOINT(S) PER STANDARD #205 AT MIDPOINT OF CROSS GUTTERS LESS THAN 40' LONG, OR AT 1/3 POINTS OF CROSS GUTTERS OF 40' OR LONGER.
8. THIS PORTION OF SPANDREL AND CROSS GUTTER SHALL BE CONSTRUCTED WITH 12 INCH THICK, CLASS "A" CONCRETE.
9. CONSTRUCT EXPANSION JOINT PER STANDARD # 205.
10. CONSTRUCT WEAKENED PLANE JOINT PER STANDARD # 205.
11. CONSTRUCT CROSS GUTTER PER TYPICAL SECTION ON SHEET 2.
12. WHEN ABUTTING SOIL HAS A HIGH SULFATE CONTENT, SPECIAL CONSIDERATIONS ARE REQUIRED. SEE SPECIFICATIONS (SECTION 16.04).

APPROVED BY:

DIRECTOR OF TRANSPORTATION
GEORGE A. JOHNSON, RCE 42328

DATE: 05/01/07

REGISTERED PROFESSIONAL ENGINEER
GEORGE A. JOHNSON
No. CE 42328
Exp. 3-31-08
CIVIL
STATE OF CALIFORNIA

REVISIONS	REV.	BY:	APR'D	DATE	REV.	BY:	APR'D	DATE
11-77, 8-82	1				4			
9-88, 2-90	2				5			
11-04	3				6			

COUNTY OF RIVERSIDE

CROSS GUTTER (LAYOUT)

STANDARD NO. 209 (1 OF 2)

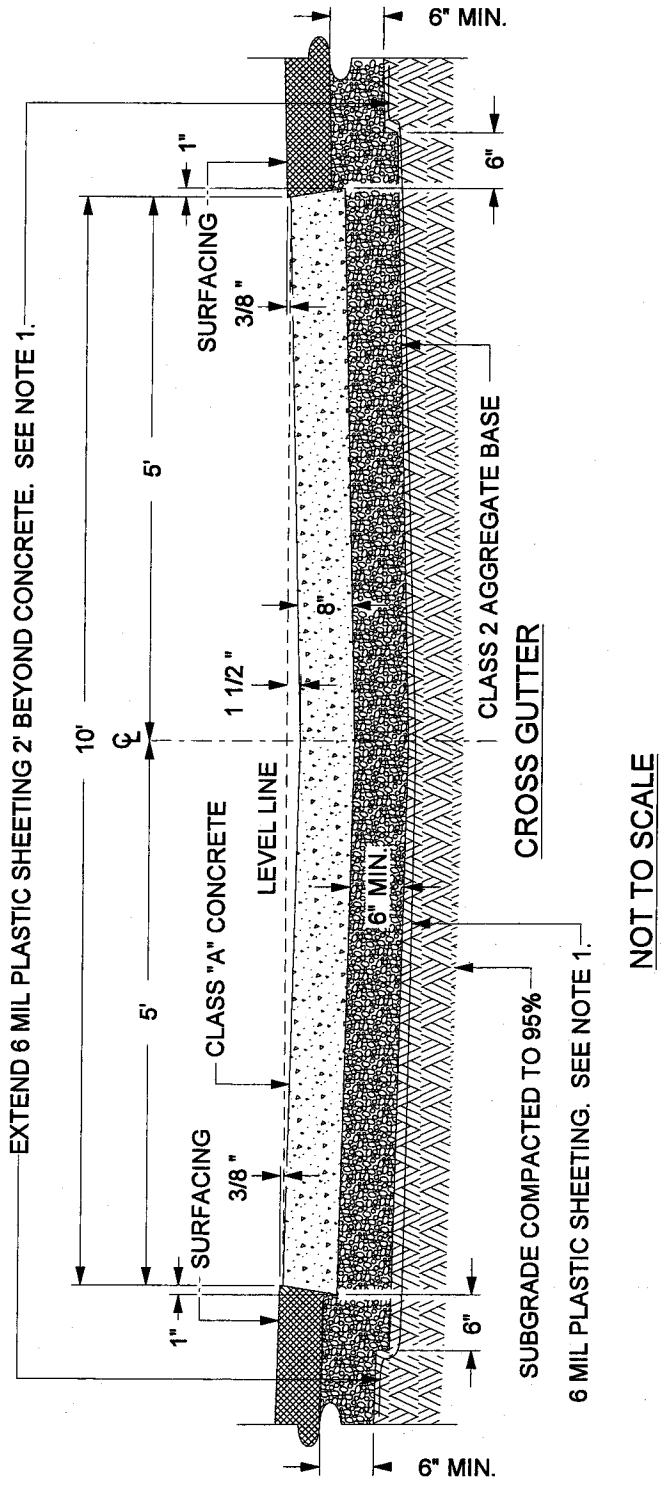

CROSS GUTTER

NOT TO SCALE

NOTE

1. WHEN ABUTTING SOIL HAS A HIGH SULFATE CONTENT, SPECIAL CONSIDERATIONS ARE REQUIRED. SEE SPECIFICATIONS (SECTION 16.04).

APPROVED BY:

DATE: 05/01/07

DIRECTOR OF TRANSPORTATION
GEORGE A. JOHNSON, RCE 42328

REGISTERED PROFESSIONAL ENGINEER GEORGE A. JOHNSON No. CE 42328 Exp. 3-31-08 CIVIL STATE OF CALIFORNIA

COUNTY OF RIVERSIDE

CROSS GUTTER (TYPICAL SECTION)

STANDARD NO. 209 (2 OF 2)

REVISIONS		REV.	BY:	APR'D	DATE	REV.	BY:	APR'D	DATE
8-71, 9-88		1				4			
2-90, 12-97		2				5			
11-04		3				6			

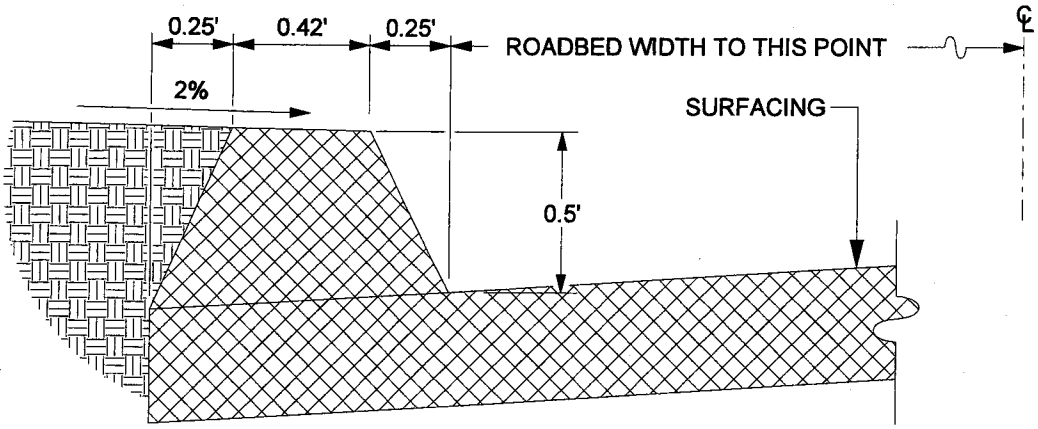

6" A.C. DIKE

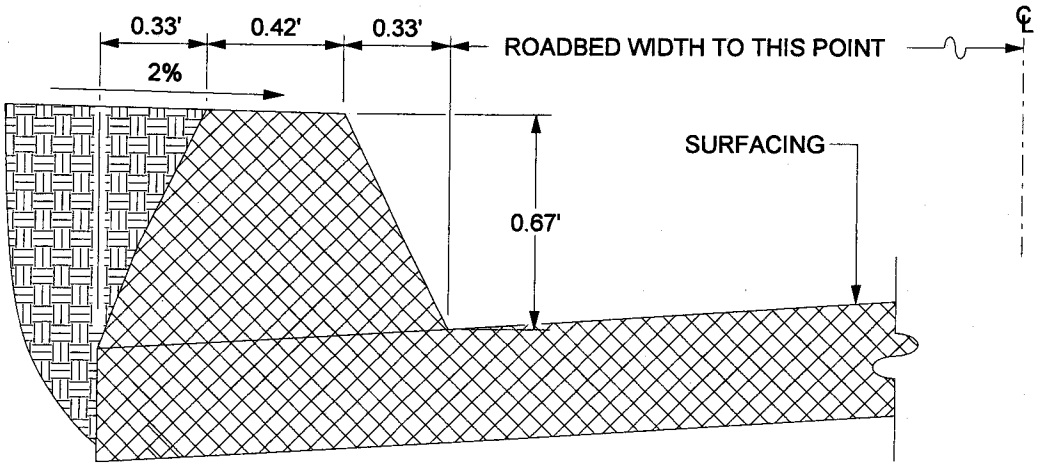

8" A.C. DIKE

NOT TO SCALE

NOTE: A.C. DIKE REQUIRED WHERE FILL SLOPES ARE STEEPER THAN 4:1, MATERIAL IS SUSCEPTIBLE TO EROSION, OR WHERE ROADWAY GRADIENT EXCEEDS 3%.

APPROVED BY:

DATE: 05/01/07

DIRECTOR OF TRANSPORTATION
GEORGE A. JOHNSON, RCE 42328

REGISTERED PROFESSIONAL ENGINEER GEORGE A. JOHNSON No. CE 42328 Exp. 3-31-08 CIVIL STATE OF CALIFORNIA

COUNTY OF RIVERSIDE

ASPHALT CONCRETE DIKES

STANDARD NO. 212

REVISIONS		REV.	BY:	APR'D	DATE	REV.	BY:	APR'D	DATE
		1				4			
		2				5			
		3				6			

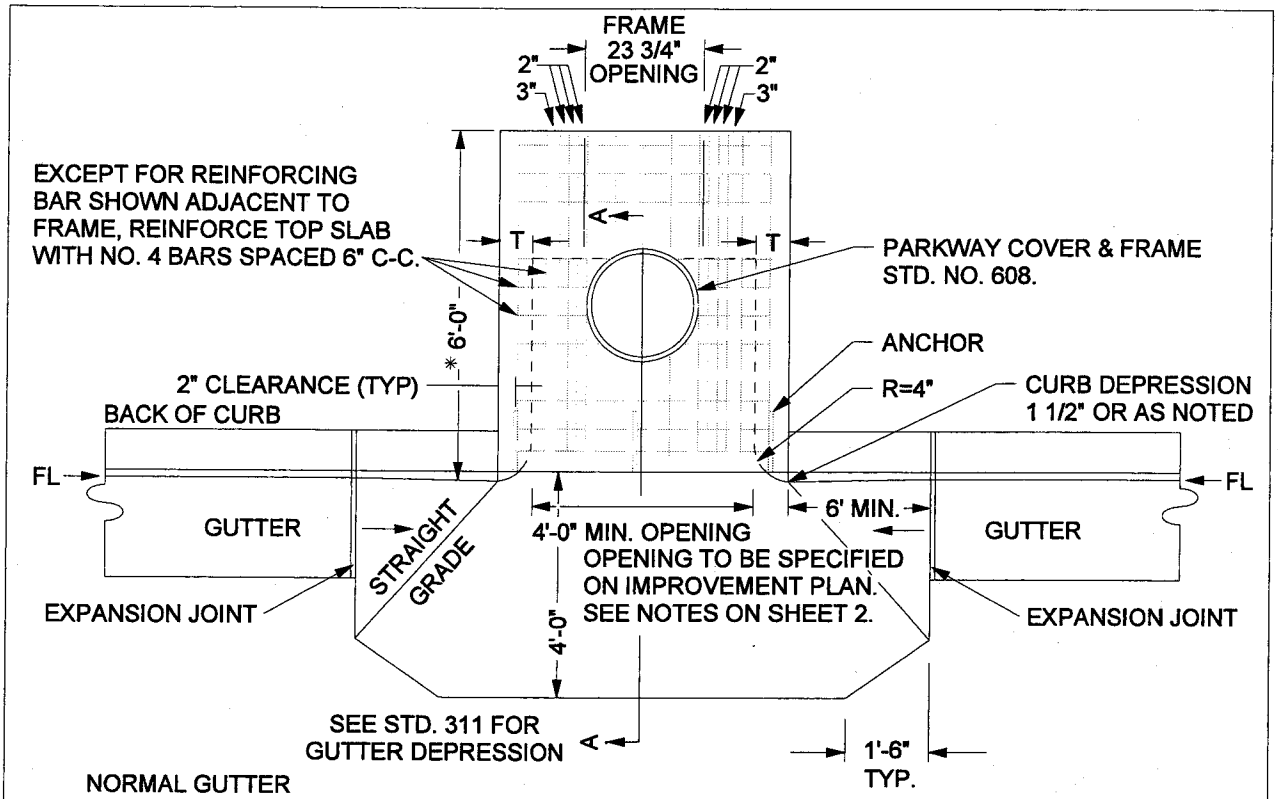

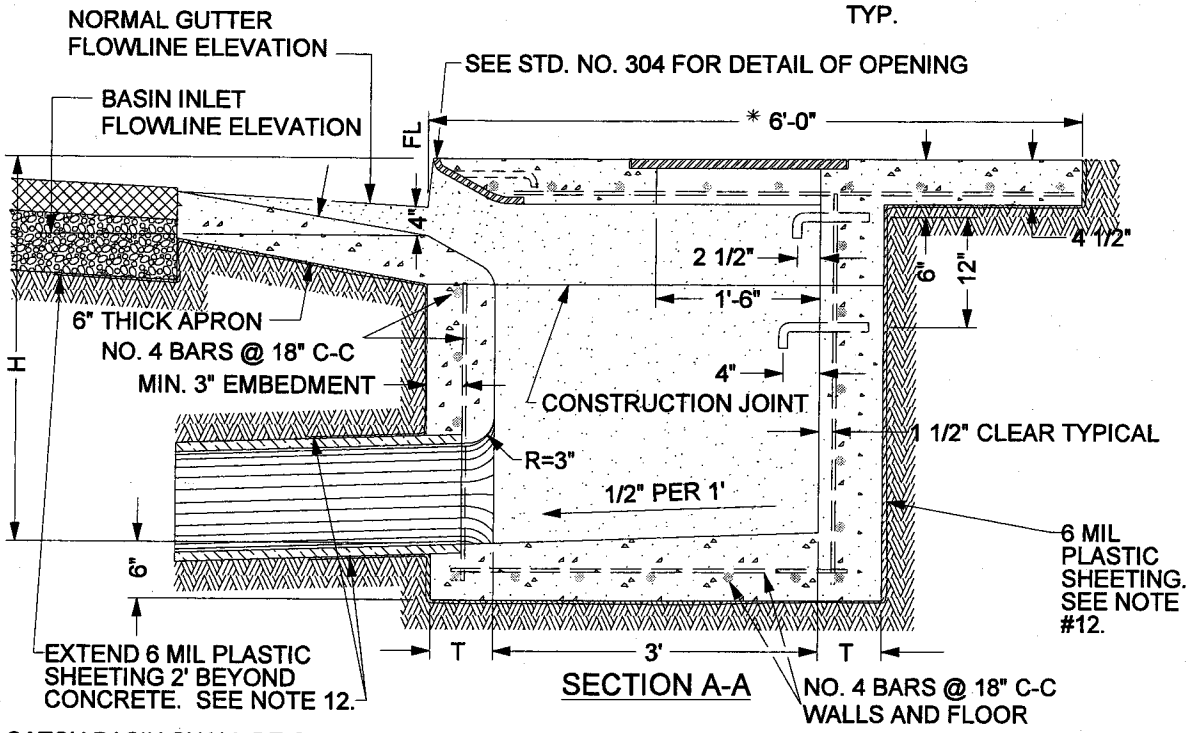

CATCH BASIN SHALL BE CLASS "A" P.C.C.

*TOP OF CATCH BASIN TO BE POURED MONOLITHIC WITH SIDEWALK, 6 FT.

NOT TO SCALE

APPROVED BY:

DATE: 05/01/07

DIRECTOR OF TRANSPORTATION
GEORGE A. JOHNSON, RCE 42328

REGISTERED PROFESSIONAL ENGINEER GEORGE A. JOHNSON No. CE 42328 Exp. 3-31-08 CIVIL STATE OF CALIFORNIA

COUNTY OF RIVERSIDE

CURB INLET CATCH BASIN

STANDARD NO. 300 (1 OF 2)

REVISIONS		REV.	BY:	APR'D	DATE	REV.	BY:	APR'D	DATE
8-71, 9-88		1				4			
4-90, 11-04		2				5			
		3				6			

1. CONNECTION PIPES MAY BE PLACED ANY POSITION AROUND THE WALLS, PROVIDED THEY POINT IN THE PROPER DIRECTION AND THE POSITION IS OTHERWISE CONSISTENT WITH THE IMPROVEMENT PLAN.
2. CURVATURE OF THE LIP AND SIDEWALLS AT GUTTER OPENING SHALL BE FORMED BY CURVED FORMS AND SHALL NOT BE MADE BY PLASTERING.
3. DIMENSIONS:
   T = 6" IF H IS 8 FEET OR LESS.
   T = 8" IF H IS GREATER THAN 8 FEET AND LESS THAN 20 FEET.
   H = 3 FEET 6 INCHES, UNLESS OTHERWISE SPECIFIED.
4. FLOOR OF BASIN SHALL BE GIVEN A STEEL - TROWELLED FINISH.
5. MANHOLE SHALL BE PLACED AS SHOWN ON STANDARD NO. 300, UNLESS NOTED DIFFERENTLY ON IMPROVEMENT PLANS.
6. OUTLET PIPE SHALL BE TRIMMED TO THE FINAL SHAPE AND LENGTH BEFORE CONCRETE IS POURED.
7. OPENING SHALL BE 4'-0" (MINIMUM) UNLESS OTHERWISE SPECIFIED.
8. REINFORCING STEEL SHALL BE NO. 4 ROUND DEFORMED BARS IN TOP SLAB, AT 18" CENTERS IN THE SIDES AND FLOOR OF THE BOX.
9. 3/4 INCH PLAIN ROUND GALVANIZED STEEL STEPS (ALHAMBRA FDY. A-3320 OR EQUAL) ARE REQUIRED AS FOLLOWS:

   IF H IS 3.5 FEET OR LESS, NO STEPS ARE REQUIRED.
   IF H IS MORE THAN 3.5 FEET, AND NOT MORE THAN 5 FEET, INSTALL 1 STEP 16" ABOVE FLOOR OF THE BASIN.
   IF H IS MORE THAN 5 FEET, INSTALL STEPS 12 INCHES APART, WITH THE TOP STEP 6 INCHES BELOW THE SURFACE OF THE BASIN.
   ALL STEPS SHALL BE 4 INCHES FROM THE WALL, EXCEPT THE TOP STEP, WHICH SHALL BE 2 1/2 INCHES (CLEAR) FROM THE WALL, AND ANCHORED NOT LESS THAN 5 INCHES INTO THE WALL OF THE BASIN.
10. SURFACE OF ALL EXPOSED CONCRETE IN BASIN SHALL CONFORM IN SLOPE, GRADE, COLOR, FINISH AND SCORING TO EXISTING OR PROPOSED CURB AND WALL ADJACENT TO THE BASIN.
11. CONCRETE SHALL BE CLASS "A" WHEN THE BASIN IS TO BE CONSTRUCTED WITHIN THE LIMITS OF A PROPOSED SIDEWALK OR IS CONTIGUOUS TO SUCH A SIDEWALK. THE TOP OF THE BASIN SHALL BE POURED MONOLITHIC WITH THE SIDEWALK, USING CLASS"A" CONCRETE IN THE SIDEWALK AND THE TOP OF THE CATCH BASIN PER SIDEWALK STANDARDS.
12. WHEN ABUTTING SOIL HAS A HIGH SULFATE CONTENT, SPECIAL CONSIDERATIONS ARE REQUIRED. SEE SPECIFICATIONS (SECTION 16.04).

APPROVED BY:

DATE: 05/01/07

DIRECTOR OF TRANSPORTATION
GEORGE A. JOHNSON, RCE 42328

REGISTERED PROFESSIONAL ENGINEER GEORGE A. JOHNSON No. CE 42328 Exp. 3-31-08 CIVIL STATE OF CALIFORNIA

COUNTY OF RIVERSIDE

CURB INLET CATCH BASIN (SPECS)

STANDARD NO. 300 (2 OF 2)

REVISIONS		REV.	BY:	APR'D	DATE	REV.	BY:	APR'D	DATE
8-24-71		1				4			
11-04		2				5			
		3				6			

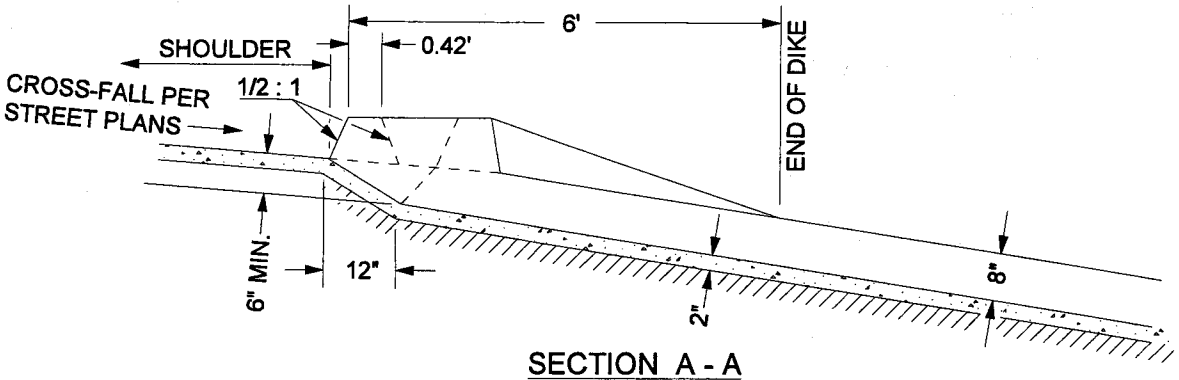

SECTION A - A

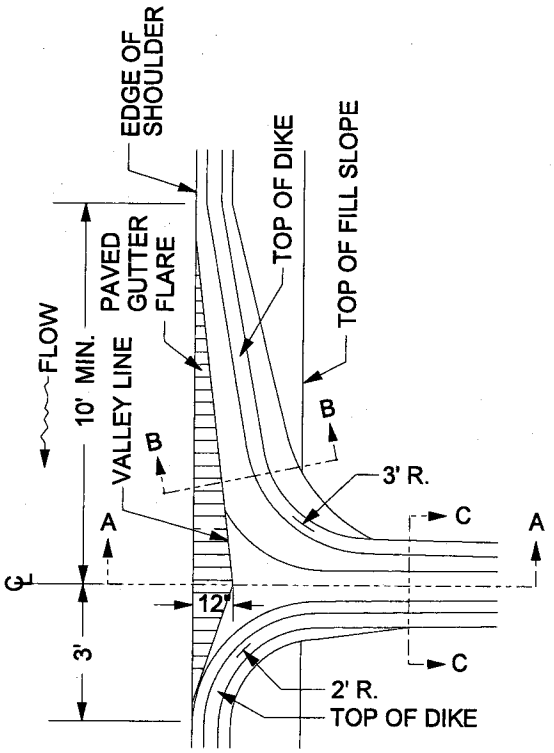

PLAN

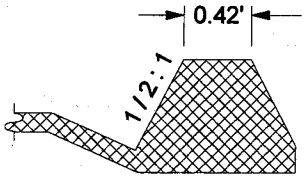

SECTION B - B

NOTE:
CROSS - SECTION OF SLOPE DITCH MAY BE SEMICIRCULAR, VEE, OR TRAPEZOIDAL. MIN. TOP WIDTH = 25", MIN. DEPTH = 8".

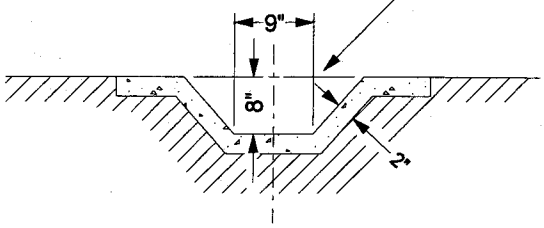

SECTION C - C

NOT TO SCALE

TO BE USED ON FILL SLOPES FLATTER THAN 4 : 1. USE MIN. 10' LENGTH OF GUTTER ON BOTH SIDES IN A SAG LOCATION. USE PIPE DOWNDRAINS FOR SLOPES STEEPER THAN 4 : 1 SLOPES.

APPROVED BY:

DATE: 05/01/07

DIRECTOR OF TRANSPORTATION
GEORGE A. JOHNSON, RCE 42328

REGISTERED PROFESSIONAL ENGINEER GEORGE A. JOHNSON No. CE 42328 Exp. 3-31-08 CIVIL STATE OF CALIFORNIA

COUNTY OF RIVERSIDE

ASPHALT CONCRETE OVERSIDE DRAIN

STANDARD NO. 306

REVISIONS		REV.	BY:	APR'D	DATE	REV.	BY:	APR'D	DATE
8-18-77, 2-82		1				4			
11-04		2				5			
		3				6			

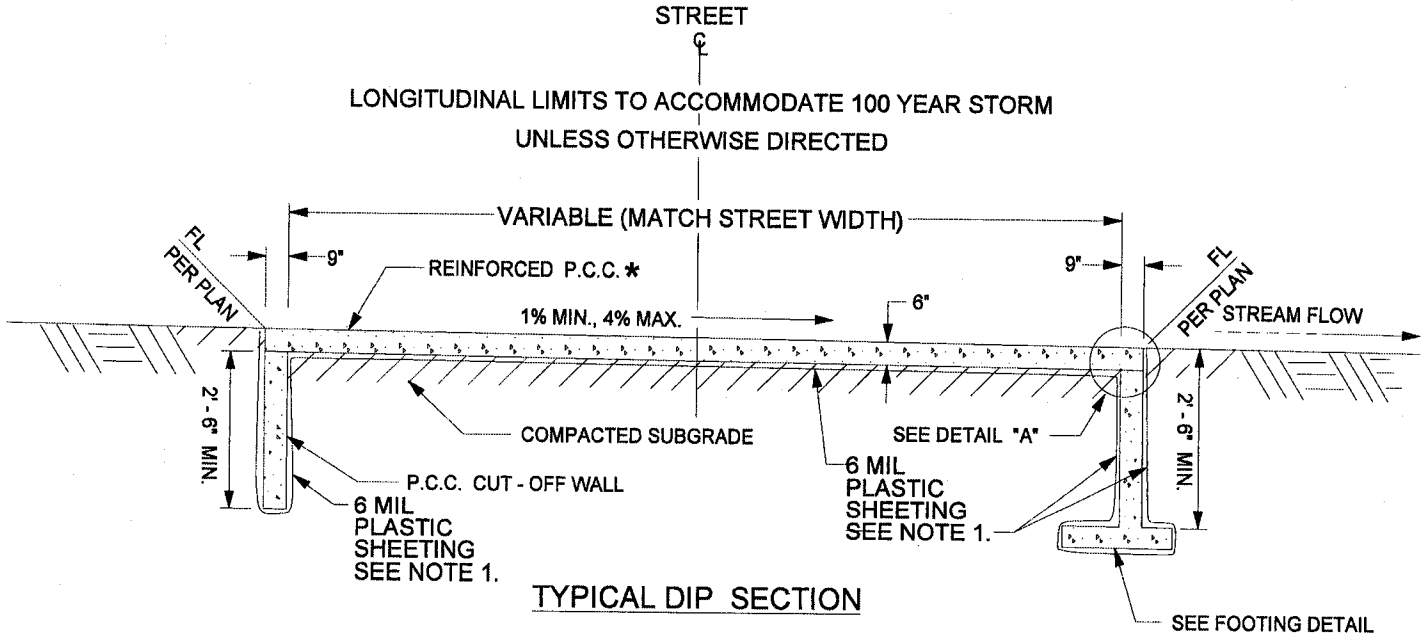

TYPICAL DIP SECTION

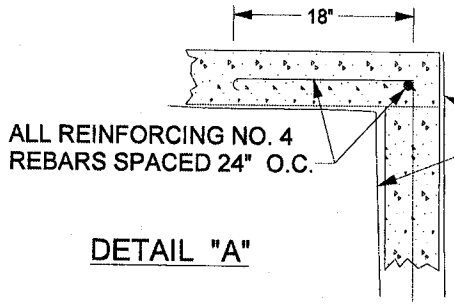

DETAIL "A"

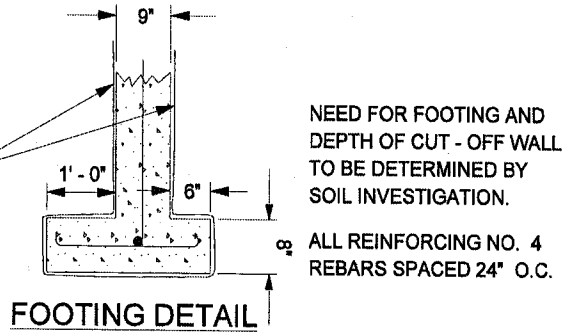

FOOTING DETAIL

* REINFORCING FOR P.C.C. PAVEMENT TO CONSIST OF 6" X 6" X 10 GAUGE WIRE MESH.

NOTE

1. WHEN ABUTTING SOIL HAS A HIGH SULFATE CONTENT, SPECIAL CONSIDERATIONS ARE REQUIRED. SEE SPECIFICATIONS (SECTION 16.04).

NOT TO SCALE

APPROVED BY:

DIRECTOR OF TRANSPORTATION
GEORGE A. JOHNSON, RCE 42328

DATE: 05/01/07

REVISIONS 11-04

REV.	BY:	APR'D	DATE	REV.	BY:	APR'D	DATE
1				4			
2				5			
3				6			

STATE OF CALIFORNIA ★ REGISTERED PROFESSIONAL ENGINEER ★ GEORGE A. JOHNSON No. CE 42328 Exp. 3-31-08 CIVIL

COUNTY OF RIVERSIDE

P.C.C. DIP SECTION

STANDARD NO. 307

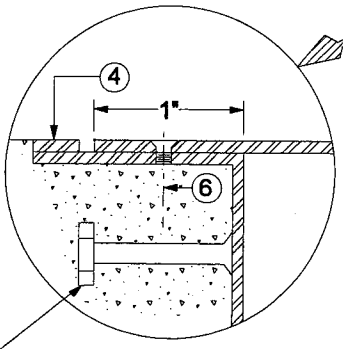

DETAIL

3" STUD ANCHOR AT 14" O.C.

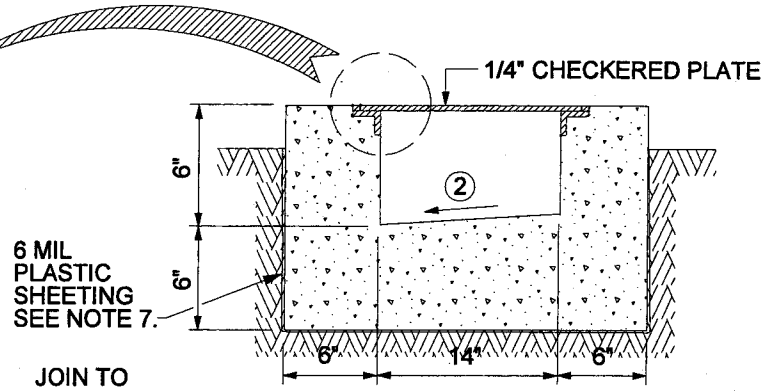

SECTION B-B

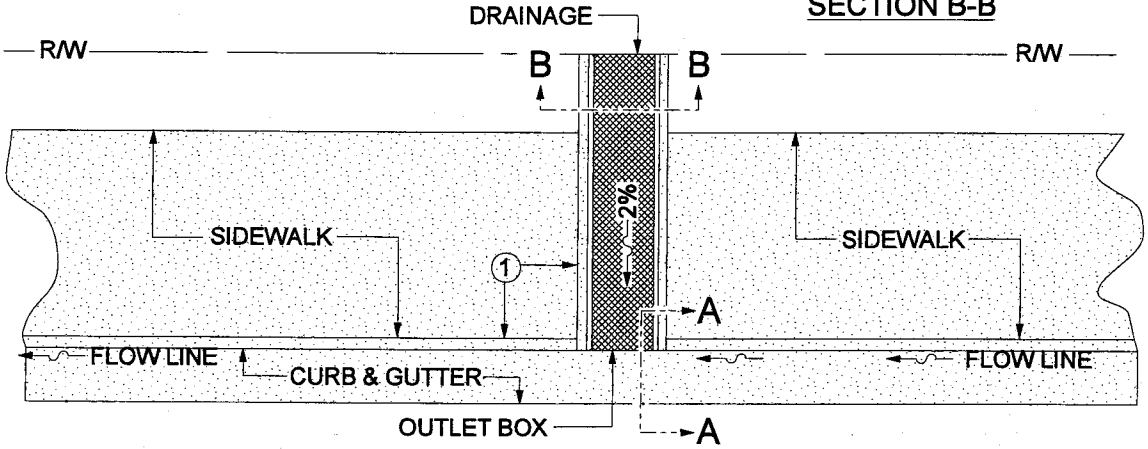

DRAIN OUTLET

NOTE

1. UNDER SIDEWALK DRAIN TO BE CONSTRUCTED AT 90° ∠. VARIATIONS FROM 90° REQUIRE THE APPROVAL OF THE DIRECTOR OF TRANSPORTATION.
2. SLOPE TO DRAIN TO ONE SIDE.
3. ALL EXPOSED METAL PARTS TO BE GALVANIZED AFTER FABRICATION.
4. 1 1/2" X 1 1/2" X 1/4" "L" FRAME WITH 3/8" X 1/4" STEEL STRIP WELDED TO FRAME.
5. CHECKERED PLATE SHALL BE GALVANIZED STEEL, MAXIMUM WIDTH 36".
6. FASTEN WITH 1/4" COARSE-THREAD COUNTERSINK METAL SCREWS AT 12" O.C..
7. WHEN ABUTTING SOIL HAS A HIGH SULFATE CONTENT, SPECIAL CONSIDERATIONS ARE REQUIRED. SEE SPECIFICATIONS (SECTION 16.04).

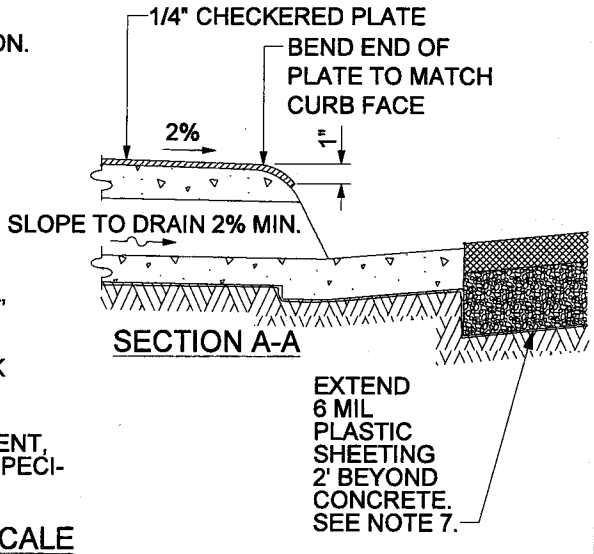

SECTION A-A

NOT TO SCALE

APPROVED BY:

DATE: 05/01/07

DIRECTOR OF TRANSPORTATION
GEORGE A. JOHNSON, RCE 42328

REGISTERED PROFESSIONAL ENGINEER GEORGE A. JOHNSON No. CE 42328 Exp. 3-31-08 CIVIL STATE OF CALIFORNIA

COUNTY OF RIVERSIDE

UNDER SIDEWALK DRAIN CAST IN PLACE

STANDARD NO. 309

REVISIONS		REV.	BY:	APR'D	DATE	REV.	BY:	APR'D	DATE
11-04		1				4			
		2				5			
		3				6			

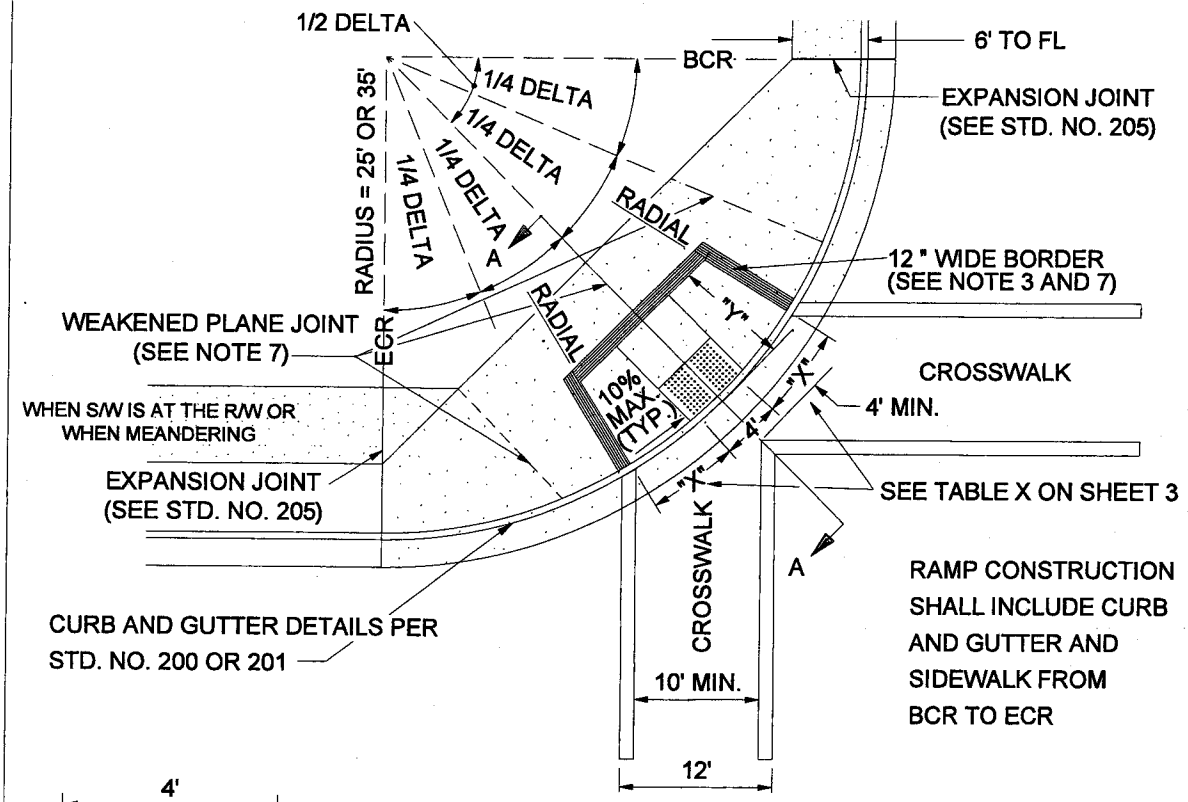

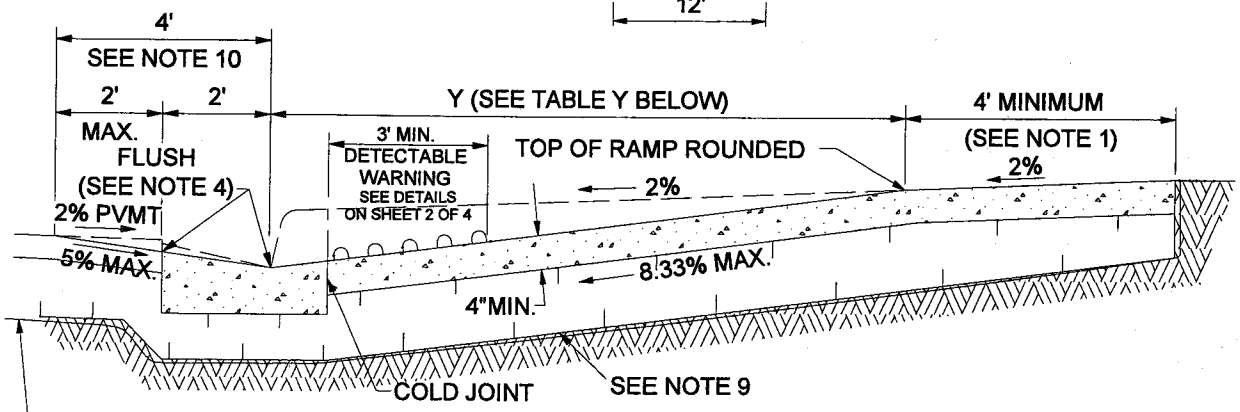

SECTION A-A

TABLE Y

CF	Y
6"	7.90'
8"	10.53'

$$Y = \frac{\text{CURB FACE (FT.)}}{6.33\%}$$

NOT TO SCALE

SEE SHEET 4 OF 4 FOR NOTES.

APPROVED BY:

DATE: 11/15/04

DIRECTOR OF TRANSPORTATION
GEORGE A. JOHNSON, RCE 42328

REGISTERED PROFESSIONAL ENGINEER GEORGE A. JOHNSON No. CE 42328 Exp. 3-31-08 CIVIL STATE OF CALIFORNIA

COUNTY OF RIVERSIDE

CURB RAMP CASE A

STANDARD NO. 403 (1 OF 4)

REVISIONS		REV.	BY:	APR'D	DATE	REV.	BY:	APR'D	DATE
8-77, 5-80	11-04	1				4			
10-81, 6-82		2				5			
9-88, 2-90		3				6			

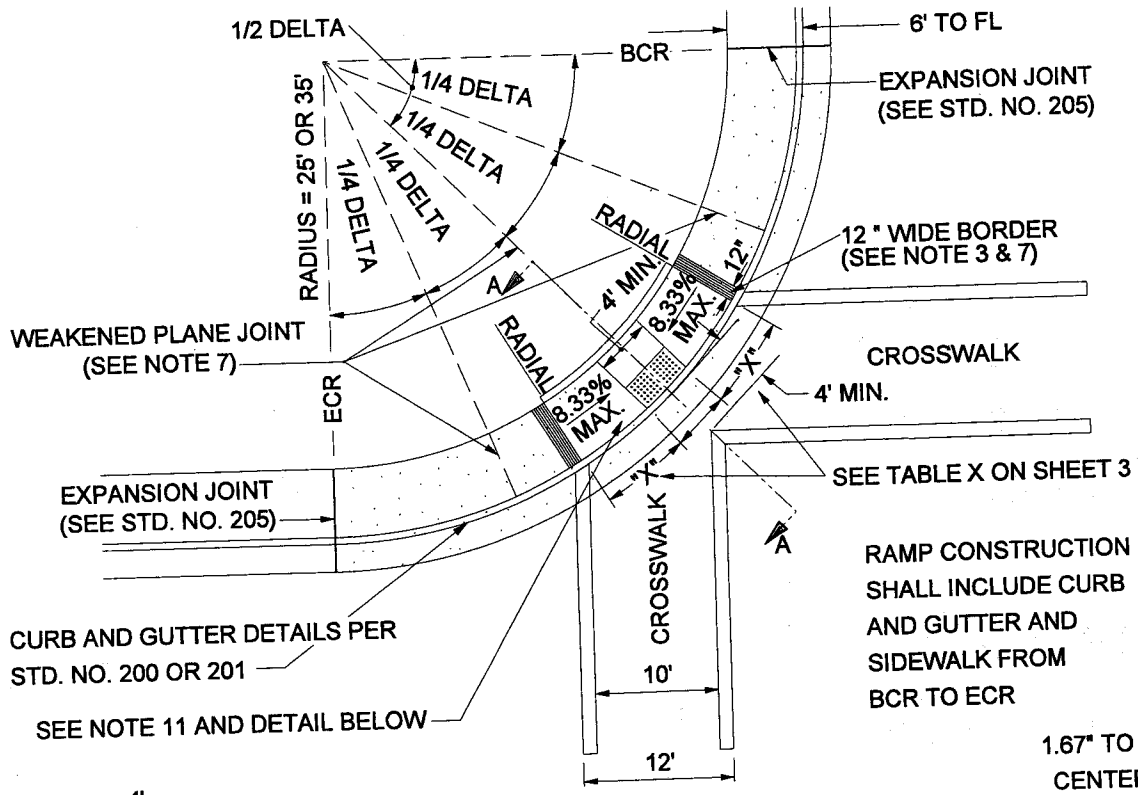

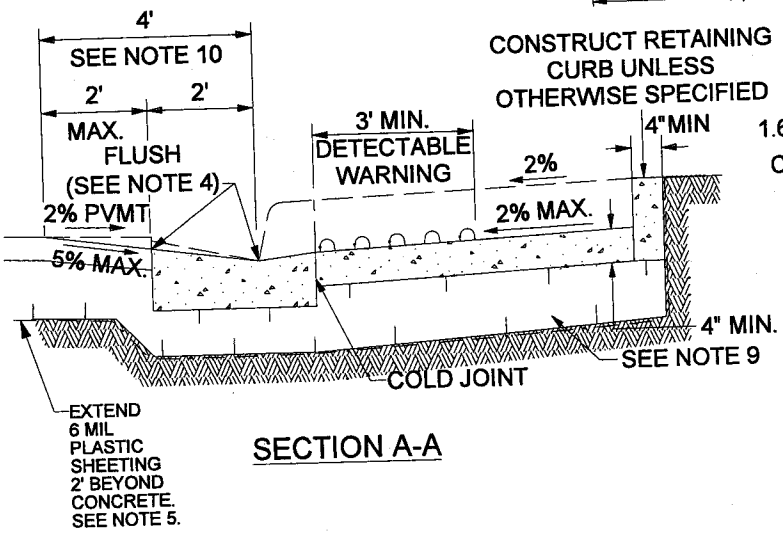

SECTION A-A

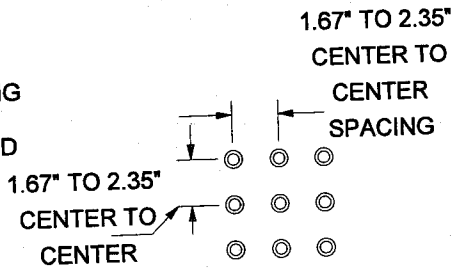

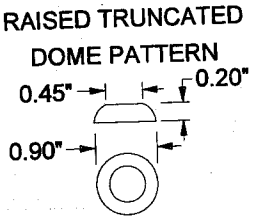

RAISED TRUNCATED DOME
DETECTABLE WARNING SURFACE
SEE NOTE 11

SEE SHEET 4 OF 4 FOR NOTES.

NOT TO SCALE

APPROVED BY:

DATE: 11/15/04

DIRECTOR OF TRANSPORTATION
GEORGE A. JOHNSON, RCE 42328

REGISTERED PROFESSIONAL ENGINEER GEORGE A. JOHNSON No. CE 42328 Exp. 3-31-06 CIVIL STATE OF CALIFORNIA

COUNTY OF RIVERSIDE

CURB RAMP CASE B

STANDARD NO. 403 (2 OF 4)

12-97

REVISIONS		REV.	BY:	APR'D	DATE	REV.	BY:	APR'D	DATE
8-77, 5-80	11-04	1				4			
10-81, 6-82		2				5			
9-88, 2-90		3				6			

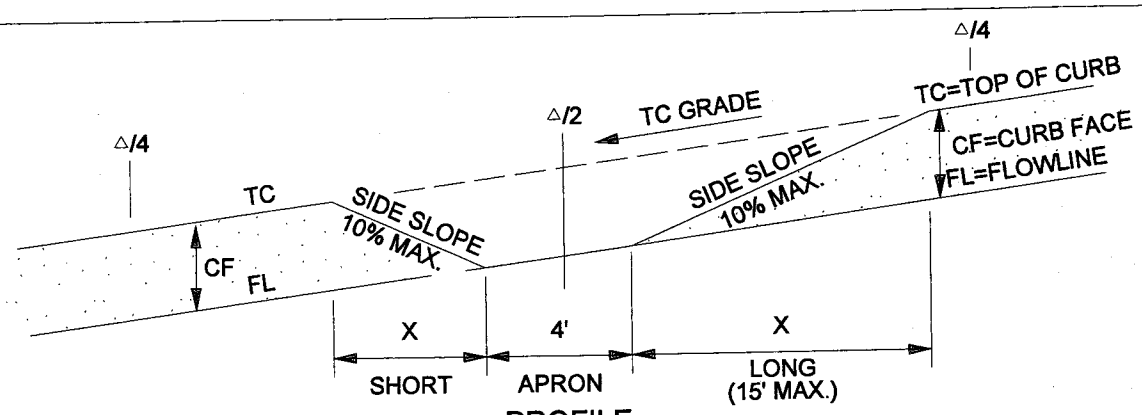

PROFILE

TABLE X

CF (IN)	RADIUS (FT)	SIDE SLOPE	X	TC GRADE (ALONG CURB RETURN)					
				1%	2%	3%	4%	5%	6%
6"	35'	10%	X_S	4.6	4.2	3.9	3.6	3.4	3.2
			X_L	5.6	6.3	7.2	8.4	10.0	12.5
8"	35'	10%	X_S	6.1	5.6	5.2	4.8	4.5	4.2
			X_L	7.5	8.4	9.6	11.2	13.4	15.0

TO CALCULATE "X" DIMENSION:

SHORT SIDE (DOWN SLOPE):

$$X_S\ (FT) = \frac{\text{CURB FACE (FT)}}{\text{SIDE SLOPE + TC GRADE}}$$

LONG SIDE (UP SLOPE):

$$X_L\ (FT) = \frac{\text{CURB FACE (FT)}}{\text{SIDE SLOPE - TC GRADE}}$$

ENGINEER TO SHOW X_S AND X_L ON IMPROVEMENT PLANS

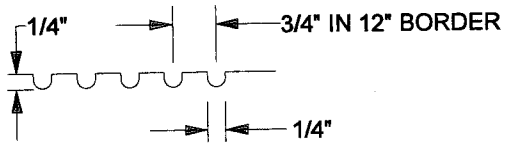

GROOVING DETAIL

APPROVED BY:

DATE: 05/05/04

DIRECTOR OF TRANSPORTATION
GEORGE A. JOHNSON, RCE 42328

REGISTERED PROFESSIONAL ENGINEER GEORGE A. JOHNSON No. CE 42328 Exp. 3-31-08 CIVIL STATE OF CALIFORNIA

COUNTY OF RIVERSIDE

CURB RAMP

STANDARD NO. 403 (3 OF 4)

REVISIONS		REV.	BY:	APR'D	DATE	REV.	BY:	APR'D	DATE
8-77, 5-80	11-04	1				4			
10-81, 6-82		2				5			
9-88, 2-90		3				6			

CONSTRUCTION NOTES:

1. IF DISTANCE FROM CURB TO BACK OF SIDEWALK IS TOO SHORT TO ACCOMODATE RAMP AND 4' LANDING, THEN USE THE CASE "B" RAMP.
2. IF SIDEWALK IS LESS THAN 6' WIDE, THE FULL WIDTH OF THE SIDEWALK SHALL BE DEPRESSED AS SHOWN IN CASE B. MINIMUM SIDEWALK WIDTH IS 4' FROM BACK OF CURB.
3. THE RAMP SHALL HAVE A 12" WIDE BORDER WITH GROOVES 1/4" WIDE AND 1/4" DEEP APPROXIMATELY 3/4" ON CENTER. SEE GROOVING DETAIL.
4. TRANSITIONS FROM RAMPS TO WALKS, GUTTERS, OR STREETS SHALL BE FLUSH AND FREE OF ABRUPT CHANGES.
5. WHEN ABUTTING SOIL HAS A HIGH SULFATE CONTENT, SPECIAL CONSIDERATIONS ARE REQUIRED. SEE SPECIFICATIONS (SECTION 16.04).
6. RAMP SIDE SLOPE VARIES UNIFORMLY FROM A MAXIMUM OF UP TO 10% AT CURB TO CONFORM WITH LONGITUDINAL SIDEWALK SLOPE ADJACENT TO TOP OF THE RAMP (EXCEPT IN CASE B).
7. CONSTRUCT WEAKENED PLANE JOINTS AT 1/4 DELTAS WHEN RADIUS EQUALS 35' AND AT INSIDE EDGE OF GROOVED BORDER WHEN RADIUS EQUALS 25'.
8. IF EXPANSIVE SOIL IS ENCOUNTERED, THEN RAMP SHALL BE CONSTRUCTED OVER CLASS 2 AGGREGATE MATERIAL.
9. CONCRETE SHALL BE CLASS B.
10. MAXIMUM SLOPES OF ADJOINING GUTTERS: THE ROAD SURFACE IMMEDIATELY ADJACENT TO THE CURB RAMP AND CONTINUOUS PASSAGE TO THE CURB RAMP SHALL NOT EXCEED 5% WITHIN 4' OF THE BOTTOM OF THE CURB RAMP.
11. DETECTABLE WARNING SURFACES ARE REQUIRED ON ALL CURB RAMPS THAT ENTER INTO A VEHICULAR TRAVEL WAY.

APPROVED BY:

DATE: 11/15/04

DIRECTOR OF TRANSPORTATION
GEORGE A. JOHNSON, RCE 42328

REGISTERED PROFESSIONAL ENGINEER GEORGE A. JOHNSON No. CE 42328 Exp. 3-31-08 CIVIL STATE OF CALIFORNIA

COUNTY OF RIVERSIDE

CURB RAMP CONSTRUCTION NOTES

REVISIONS		REV.	BY:	APR'D	DATE	REV.	BY:	APR'D	DATE
8-77, 5-80	11-04	1				4			
10-81, 6-82		2				5			
9-88, 2-90		3				6			

12-97

STANDARD NO. 403 (4 OF 4)

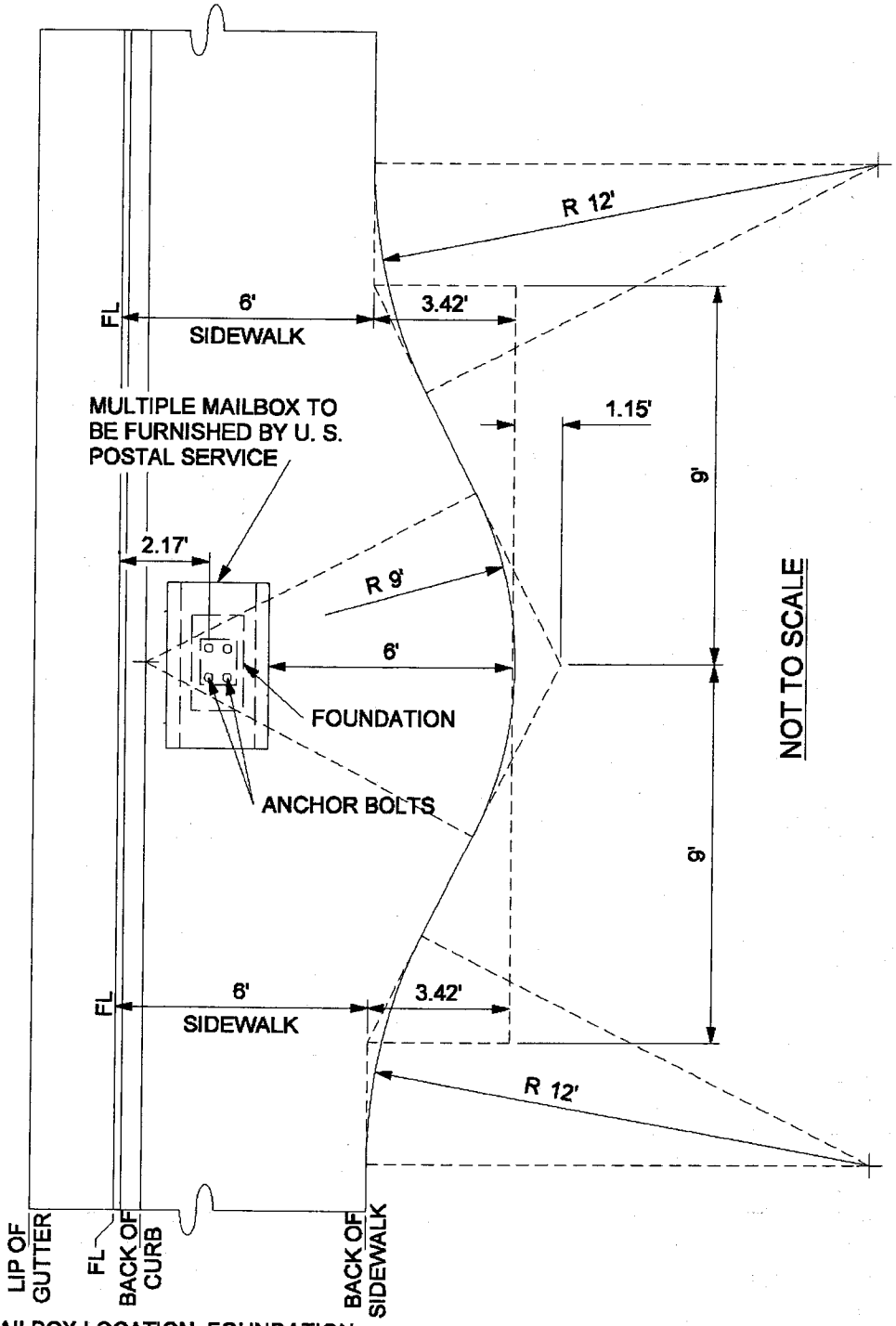

NOTE: MAILBOX LOCATION, FOUNDATION ANCHOR BOLTS, AND BOLT HOLES SHALL CONFORM TO SPECIFICATIONS FURNISHED BY THE POSTMASTER.

APPROVED BY:

DATE: 05/01/07

DIRECTOR OF TRANSPORTATION
GEORGE A. JOHNSON, RCE 42328

REGISTERED PROFESSIONAL ENGINEER GEORGE A. JOHNSON No. CE 42328 Exp. 3-31-08 CIVIL STATE OF CALIFORNIA

COUNTY OF RIVERSIDE

MULTIPLE MAILBOX INSTALLATION FOR NEW SIDEWALK

STANDARD NO. 812

REVISIONS		REV.	BY:	APR'D	DATE	REV.	BY:	APR'D	DATE
		1				4			
		2				5			
		3				6			

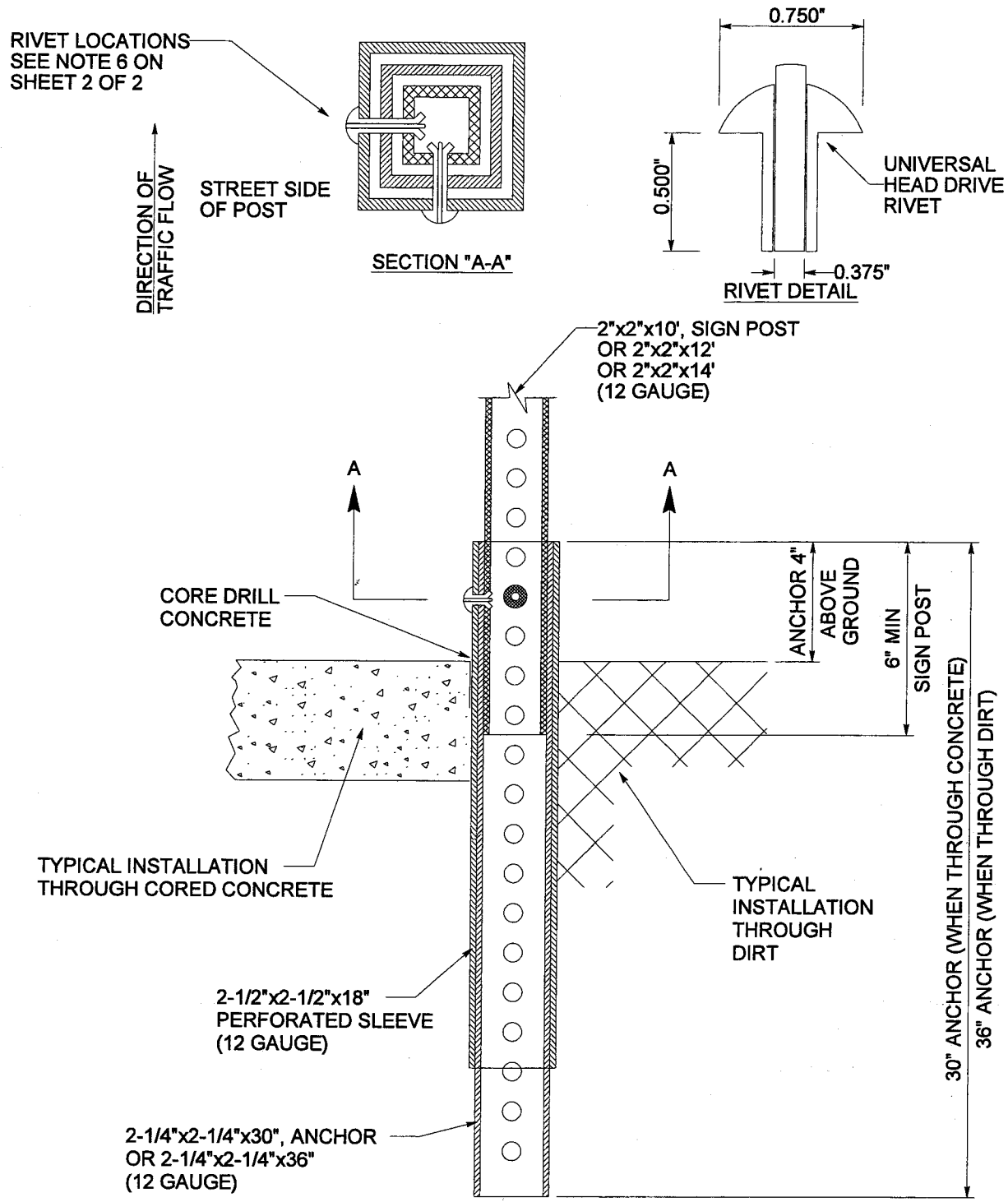

APPROVED BY:

DIRECTOR OF TRANSPORTATION DATE
JUAN C. PEREZ, RCE 49568

REGISTERED PROFESSIONAL ENGINEER
No. Exp.
CIVIL
STATE OF CALIFORNIA

COUNTY OF RIVERSIDE

SIGN POST INSTALLATION

STANDARD No. 1222 (1 of 2)

REVISIONS		REV.	BY:	APR'D	DATE	REV.	BY:	APR'D	DATE
		1	JK	JP	08-05-10	4			
		2				5			
		3				6			

NOTES:

1. SQUARE PERFORATED STEEL TUBE POST WITH TWO PIECE ANCHOR AND SLEEVE, "TELESPAR", SHALL BE USED FOR ALL TRAFFIC CONTROL AND INFORMATIONAL SIGNS WITHIN ROAD RIGHT-OF-WAY.
2. THE NUMBER OF POSTS REQUIRED FOR SIGN INSTALLATION SHALL BE DETERMINED BY THE AREA OF THE SIGN OR COMBINATION OF SIGNS TO BE INSTALLED. A SINGLE POST SHALL BE USED WHERE BOTH THE LENGTH AND WIDTH ARE 48" OR LESS. DOUBLE POSTS SHALL BE USED WHERE EITHER THE LENGTH OR WIDTH EXCEEDS 48".
3. THE 2 PIECE ANCHOR AND SLEEVE ASSEMBLY SHALL CONSIST OF A 2 1/4" SQUARE BY 30" (THROUGH SIDEWALK) OR 36" (THROUGH SOIL) ANCHOR WITH A 2 1/2" SQUARE BY 18" SLEEVE. ALL SLEEVES AND ANCHORS SHALL BE 12 GAUGE.
4. THE ANCHOR AND SLEEVE ASSEMBLIES SHALL BE DRIVEN SIMULTANEOUSLY UNTIL ONLY 4" REMAINS ABOVE GROUND LEVEL.
5. ALL DIRT SHALL BE REMOVED FROM THE INSIDE TOP 6" MINIMUM OF THE ANCHOR ASSEMBLY TO ALLOW FOR THE INSTALLATION OF THE SIGN POST.
6. INSTALL 2" SQUARE SIGN POST MINIMUM 6" INTO THE ANCHOR ASSEMBLY AND SECURE IN PLACE WITH TWO 3/8" DRIVE RIVETS AS SHOWN. THE RIVETS SHALL BE INSTALLED ON THE SIDE FACING TRAFFIC FLOW AND THE SIDE OF APPROACHING TRAFFIC AS SHOWN IN ORDER TO ACHIEVE THE MAXIMUM BREAK-AWAY EFFECT.
7. INSTALLATION ACCORDING TO THESE REQUIREMENTS IS ESSENTIALTO MAINTAIN BREAK-AWAY CHARACTERISTICS OF THE POST SYSTEM.
8. SEE STANDARD No's. 815 AND 816 FOR PLACEMENT OF SIGN POST.
9. ALL ANCHOR ASSEMBLIES SHALL BE CORE DRILLED THROUGH CONCRETE AND ASPHALT.
10. ALL SIGNS ATTACHED TO PERFORATED POSTS SHALL HAVE ZINC COATED OR S.S. WASHERS BEHIND THE RIVET THAT ARE LARGER THAN THE HEAD OF THE RIVET.
11. ALL REGULATORY, WARNING AND GUIDE SIGNS INSTALLED SHALL BE 0.080 INCHES IN THICKNESS.
12. ALL SIGNS 36" OR LARGER SHALL BE INSTALLED WITH BACK BRACES SPECIFICALLY DESIGNED FOR 2" SQUARE PERFORATED POSTS. (2" RISE)
13. IN SOME INSTANCES CONCRETE FOUNDATION MAY BE REQUIRED TO ENSURE PROPER STABILITY, THIS OPTION IS TO BE USED AT THE DISCRESTION OF THE ENGINEER OR ONSITE INSPECTOR.

APPROVED BY:

DIRECTOR OF TRANSPORTATION DATE
JUAN C. PEREZ, RCE 49568

REGISTERED PROFESSIONAL ENGINEER
No. Exp.
CIVIL
STATE OF CALIFORNIA

COUNTY OF RIVERSIDE

SIGN POST INSTALLATION NOTES

STANDARD No. 1222 (2 of 2)

REVISIONS		REV.	BY:	APR'D	DATE	REV.	BY:	APR'D	DATE
		1	JK	JP	08-05-10	4			
		2				5			
		3				6			

Appendix C

GTE/Verizon Manhole Adjustment Specifications and Standard

PAVAJUSTER®
MANHOLE ADJUSTING RINGS

1. GENERAL

1.01 This section provides information on the PAVAJUSTER manhole adjusting ring manufactured by Manholes Incorporated. The adjusting ring allows the level of manhole covers to be raised to allow for changes in street grades that result from pavement resurfacing.

2. DESCRIPTION

2.01 The manhole adjusting ring (Figure 1) is made of cast iron. The ring consists of two rims and one flange. One rim fits into the cover opening of the manhole frame and the other rim overhangs the lip of the manhole frame to provide a seat for the manhole cover. The flange extends 5 inches outward to be embedded in the pavement.

2.02 The manhole adjusting ring is available in two diameters to fit the manhole frames: 27 inches and 30 inches.

2.03 The manhole adjusting ring is available in three elevations: 2, 2-1/2, and 3 inches. When more than a 3-inch rise is needed, two rings of appropriate sizes shall be used. In no case, however, shall more than two rings be used. If the rise is such that more than two rings are necessary, the manhole frame shall be raised so that rings are not needed.

3. USE

3.01 Manhole adjusting rings are used where the existing pavement is to be resurfaced and the manhole frame must be raised approximately 2 to 3 inches to meet the new grade. These rings should be given first consideration because they are the most economical means of raising the level of the manhole cover to the proper grade. If the new pavement runs slightly over or under the size of a particular adjusting ring, the contractor should be requested to lower or build up his pavement to meet the manhole grade.

3.02 Manhole adjusting rings should be placed at manhole locations just prior to paving operations. If, however, the rings must be placed considerably in advance of the paving operation and the area is open to traffic, the rings should be held in place with a ramp of coldpatch material. Approximately 3 cubic feet of material is required for each ring.

3.03 A manhole adjusting ring should not be used where any portion of the ring remains exposed above the finished pavement.

4. INSTALLATION

4.01 Installation of the manhole adjusting ring is performed as follows:

(a) Ensure that a base coat of pavement is applied.
(b) Remove enough pavement from around the manhole to enable the ring to be installed.
(c) Remove the manhole cover. Clean out the cover seat in the manhole frame and install the adjusting ring. (Ensure that the flange of the adjusting ring is well seated in the pavement under the circumference of the flange.)
(d) Spray the top of the flange of the adjusting ring with a prime or tack coat; then replace the manhole cover. (If the manhole cover is badly worn or warped, use a new cover).
(e) Apply the finish coat. Ensure that the top of the manhole cover is flush with the road surface.

NOTE: If asphalt is being used, leave the asphalt at least 1/4-inch higher than the top of the cover before the final rolling.

®Registered Trademark of Manholes Incorporated.

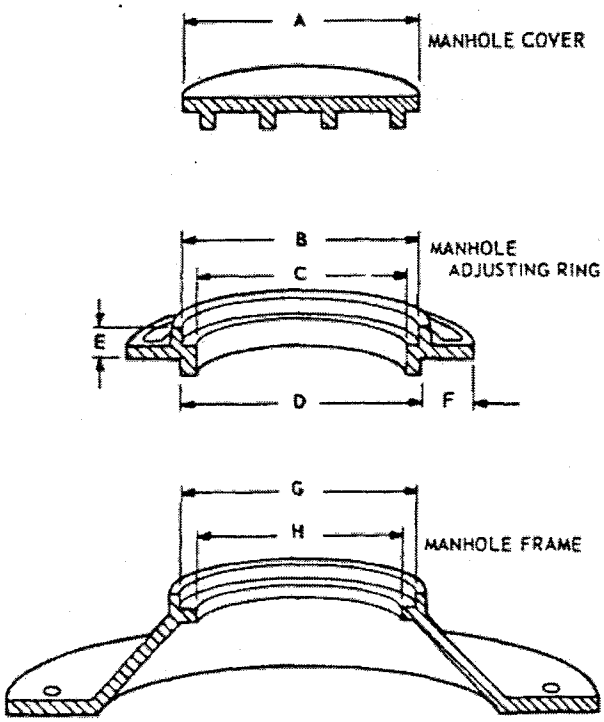

DIMENSIONS IN INCHES							
A	B	C	D	E	F	G	H
29	29	27	29	2	5	29	27
29	29	27	29	2-1/2	5	29	27
29	29	27	29	3	5	29	27
32	32	30	32	2	5	32	30
32	32	30	32	2-1/2	5	32	30
32	32	30	32	3	5	32	30

Figure 1. Manhole Frames, Adjusting Rings, and Covers.

Appendix D

Attachment "C" for Risk Level 1 Requirements

ATTACHMENT C
RISK LEVEL 1 REQUIREMENTS

A. Effluent Standards

[These requirements are the same as those in the General Permit order.]

1. Narrative – Risk Level 1 dischargers shall comply with the narrative effluent standards listed below:

   a. Storm water discharges and authorized non-storm water discharges regulated by this General Permit shall not contain a hazardous substance equal to or in excess of reportable quantities established in 40 C.F.R. §§ 117.3 and 302.4, unless a separate NPDES Permit has been issued to regulate those discharges.

   b. Dischargers shall minimize or prevent pollutants in storm water discharges and authorized non-storm water discharges through the use of controls, structures, and management practices that achieve BAT for toxic and non-conventional pollutants and BCT for conventional pollutants.

2. Numeric – Risk Level 1 dischargers are not subject to a numeric effluent standard.

B. Good Site Management "Housekeeping"

1. Risk Level 1 dischargers shall implement good site management (i.e., "housekeeping") measures for construction materials that could potentially be a threat to water quality if discharged. At a minimum, Risk Level 1 dischargers shall implement the following good housekeeping measures:

   a. Conduct an inventory of the products used and/or expected to be used and the end products that are produced and/or expected to be produced. This does not include materials and equipment that are designed to be outdoors and exposed to environmental conditions (i.e. poles, equipment pads, cabinets, conductors, insulators, bricks, etc.).

   b. Cover and berm loose stockpiled construction materials that are not actively being used (i.e. soil, spoils, aggregate, fly-ash, stucco, hydrated lime, etc.).

c. Store chemicals in watertight containers (with appropriate secondary containment to prevent any spillage or leakage) or in a storage shed (completely enclosed).

d. Minimize exposure of construction materials to precipitation. This does not include materials and equipment that are designed to be outdoors and exposed to environmental conditions (i.e. poles, equipment pads, cabinets, conductors, insulators, bricks, etc.).

e. Implement BMPs to prevent the off-site tracking of loose construction and landscape materials.

2. Risk Level 1 dischargers shall implement good housekeeping measures for waste management, which, at a minimum, shall consist of the following:

   a. Prevent disposal of any rinse or wash waters or materials on impervious or pervious site surfaces or into the storm drain system.

   b. Ensure the containment of sanitation facilities (e.g., portable toilets) to prevent discharges of pollutants to the storm water drainage system or receiving water.

   c. Clean or replace sanitation facilities and inspecting them regularly for leaks and spills.

   d. Cover waste disposal containers at the end of every business day and during a rain event.

   e. Prevent discharges from waste disposal containers to the storm water drainage system or receiving water.

   f. Contain and securely protect stockpiled waste material from wind and rain at all times unless actively being used.

   g. Implement procedures that effectively address hazardous and non-hazardous spills.

   h. Develop a spill response and implementation element of the SWPPP prior to commencement of construction activities. The SWPPP shall require that:

      i. Equipment and materials for cleanup of spills shall be available on site and that spills and leaks shall be cleaned up immediately and disposed of properly; and

ii. Appropriate spill response personnel are assigned and trained.

i. Ensure the containment of concrete washout areas and other washout areas that may contain additional pollutants so there is no discharge into the underlying soil and onto the surrounding areas.

3. Risk Level 1 dischargers shall implement good housekeeping for vehicle storage and maintenance, which, at a minimum, shall consist of the following:

   a. Prevent oil, grease, or fuel to leak in to the ground, storm drains or surface waters.

   b. Place all equipment or vehicles, which are to be fueled, maintained and stored in a designated area fitted with appropriate BMPs.

   c. Clean leaks immediately and disposing of leaked materials properly.

4. Risk Level 1 dischargers shall implement good housekeeping for landscape materials, which, at a minimum, shall consist of the following:

   a. Contain stockpiled materials such as mulches and topsoil when they are not actively being used.

   b. Contain fertilizers and other landscape materials when they are not actively being used.

   c. Discontinue the application of any erodible landscape material within 2 days before a forecasted rain event or during periods of precipitation.

   d. Apply erodible landscape material at quantities and application rates according to manufacture recommendations or based on written specifications by knowledgeable and experienced field personnel.

   e. Stack erodible landscape material on pallets and covering or storing such materials when not being used or applied.

5. Risk Level 1 dischargers shall conduct an assessment and create a list of potential pollutant sources and identify any areas of the site where additional BMPs are necessary to reduce or prevent pollutants in storm water discharges and authorized non-storm water discharges. This potential pollutant list shall be kept with the SWPPP and shall identify

all non-visible pollutants which are known, or should be known, to occur on the construction site. At a minimum, when developing BMPs, Risk Level 1 dischargers shall do the following:

a. Consider the quantity, physical characteristics (e.g., liquid, powder, solid), and locations of each potential pollutant source handled, produced, stored, recycled, or disposed of at the site.

b. Consider the degree to which pollutants associated with those materials may be exposed to and mobilized by contact with storm water.

c. Consider the direct and indirect pathways that pollutants may be exposed to storm water or authorized non-storm water discharges. This shall include an assessment of past spills or leaks, non-storm water discharges, and discharges from adjoining areas.

d. Ensure retention of sampling, visual observation, and inspection records.

e. Ensure effectiveness of existing BMPs to reduce or prevent pollutants in storm water discharges and authorized non-storm water discharges.

6. Risk Level 1 dischargers shall implement good housekeeping measures on the construction site to control the air deposition of site materials and from site operations. Such particulates can include, but are not limited to, sediment, nutrients, trash, metals, bacteria, oil and grease and organics.

C. Non-Storm Water Management

1. Risk Level 1 dischargers shall implement measures to control all non-storm water discharges during construction.

2. Risk Level 1 dischargers shall wash vehicles in such a manner as to prevent non-storm water discharges to surface waters or MS4 drainage systems.

3. Risk Level 1 dischargers shall clean streets in such a manner as to prevent unauthorized non-storm water discharges from reaching surface water or MS4 drainage systems.

D. Erosion Control

1. Risk Level 1 dischargers shall implement effective wind erosion control.

2. Risk Level 1 dischargers shall provide effective soil cover for inactive[1] areas and all finished slopes, open space, utility backfill, and completed lots.

3. Risk Level 1 dischargers shall limit the use of plastic materials when more sustainable, environmentally friendly alternatives exist. Where plastic materials are deemed necessary, the discharger shall consider the use of plastic materials resistant to solar degradation.

E. Sediment Controls

1. Risk Level 1 dischargers shall establish and maintain effective perimeter controls and stabilize all construction entrances and exits to sufficiently control erosion and sediment discharges from the site.

2. On sites where sediment basins are to be used, Risk Level 1 dischargers shall, at minimum, design sediment basins according to the method provided in CASQA's Construction BMP Guidance Handbook.

F. Run-on and Runoff Controls

Risk Level 1 dischargers shall effectively manage all run-on, all runoff within the site and all runoff that discharges off the site. Run-on from off site shall be directed away from all disturbed areas or shall collectively be in compliance with the effluent limitations in this General Permit.

G. Inspection, Maintenance and Repair

1. Risk Level 1 dischargers shall ensure that all inspection, maintenance repair and sampling activities at the project location shall be performed or supervised by a Qualified SWPPP Practitioner (QSP) representing the discharger. The QSP may delegate any or all of these activities to an employee trained to do the task(s) appropriately, but shall ensure adequate deployment.

2. Risk Level 1 dischargers shall perform weekly inspections and observations, and at least once each 24-hour period during extended

[1] Inactive areas of construction are areas of construction activity that have been disturbed and are not scheduled to be re-disturbed for at least 14 days.

storm events, to identify and record BMPs that need maintenance to operate effectively, that have failed, or that could fail to operate as intended. Inspectors shall be the QSP or be trained by the QSP.

3. Upon identifying failures or other shortcomings, as directed by the QSP, Risk Level 1 dischargers shall begin implementing repairs or design changes to BMPs within 72 hours of identification and complete the changes as soon as possible.

4. For each inspection required, Risk Level 1 dischargers shall complete an inspection checklist, using a form provided by the State Water Board or Regional Water Board or in an alternative format.

5. Risk Level 1 dischargers shall ensure that checklists shall remain onsite with the SWPPP and at a minimum, shall include:

   a. Inspection date and date the inspection report was written.

   b. Weather information, including presence or absence of precipitation, estimate of beginning of qualifying storm event, duration of event, time elapsed since last storm, and approximate amount of rainfall in inches.

   c. Site information, including stage of construction, activities completed, and approximate area of the site exposed.

   d. A description of any BMPs evaluated and any deficiencies noted.

   e. If the construction site is safely accessible during inclement weather, list the observations of all BMPs: erosion controls, sediment controls, chemical and waste controls, and non-storm water controls. Otherwise, list the results of visual inspections at all relevant outfalls, discharge points, downstream locations and any projected maintenance activities.

   f. Report the presence of noticeable odors or of any visible sheen on the surface of any discharges.

   g. Any corrective actions required, including any necessary changes to the SWPPP and the associated implementation dates.

   h. Photographs taken during the inspection, if any.

   i. Inspector's name, title, and signature.

H. Rain Event Action Plan

Not required for Risk Level 1 dischargers.

APPENDIX A

ATTACHMENT C

I. Risk Level 1 Monitoring and Reporting Requirements

Table 1- Summary of Monitoring Requirements

Risk Level	Visual Inspection					Sample Collection	
	Quarterly non-Storm Water Discharge	Pre-storm Event		Daily Storm Bmp	Post Storm	Storm Water Discharge	Receiving Water
		Baseline	REAP				
1	X	X		X	X		

1. Construction Site Monitoring Program Requirements

a. Pursuant to Water Code Sections 13383 and 13267, all dischargers subject to this General Permit shall develop and implement a written site-specific Construction Site Monitoring Program (CSMP) in accordance with the requirements of this Section. The CSMP shall include all monitoring procedures and instructions, location maps, forms, and checklists as required in this section. The CSMP shall be developed prior to the commencement of construction activities, and revised as necessary to reflect project revisions. The CSMP shall be a part of the Storm Water Pollution Prevention Plan (SWPPP), included as an appendix or separate SWPPP chapter.

b. Existing dischargers registered under the State Water Board Order No. 99-08-DWQ shall make and implement necessary revisions to their Monitoring Programs to reflect the changes in this General Permit in a timely manner, but no later than July 1, 2010. Existing dischargers shall continue to implement their existing Monitoring Programs in compliance with State Water Board Order No. 99-08-DWQ until the necessary revisions are completed according to the schedule above.

c. When a change of ownership occurs for all or any portion of the construction site prior to completion or final stabilization, the new discharger shall comply with these requirements as of the date the ownership change occurs.

2. Objectives

The CSMP shall be developed and implemented to address the following objectives:

a. To demonstrate that the site is in compliance with the Discharge Prohibitions;

b. To determine whether non-visible pollutants are present at the construction site and are causing or contributing to exceedances of water quality objectives;

c. To determine whether immediate corrective actions, additional Best Management Practice (BMP) implementation, or SWPPP revisions are necessary to reduce pollutants in storm water discharges and authorized non-storm water discharges; and

d. To determine whether BMPs included in the SWPPP are effective in preventing or reducing pollutants in storm water discharges and authorized non-storm water discharges.

3. **Risk Level 1 - Visual Monitoring (Inspection) Requirements for Qualifying Rain Events**

a. Risk Level 1 dischargers shall visually observe (inspect) storm water discharges at all discharge locations within two business days (48 hours) after each qualifying rain event.

b. Risk Level 1 dischargers shall visually observe (inspect) the discharge of stored or contained storm water that is derived from and discharged subsequent to a qualifying rain event producing precipitation of ½ inch or more at the time of discharge. Stored or contained storm water that will likely discharge after operating hours due to anticipated precipitation shall be observed prior to the discharge during operating hours.

c. Risk Level 1 dischargers shall conduct visual observations (inspections) during business hours only.

d. Risk Level 1 dischargers shall record the time, date and rain gauge reading of all qualifying rain events.

e. Within 2 business days (48 hours) prior to each qualifying rain event, Risk Level 1 dischargers shall visually observe (inspect):

i. All storm water drainage areas to identify any spills, leaks, or uncontrolled pollutant sources. If needed, the discharger shall implement appropriate corrective actions.

ii. All BMPs to identify whether they have been properly implemented in accordance with the SWPPP. If needed, the discharger shall implement appropriate corrective actions.

iii. Any storm water storage and containment areas to detect leaks and ensure maintenance of adequate freeboard.

f. For the visual observations (inspections) described in e.i and e.iii above, Risk Level 1 dischargers shall observe the presence or absence of floating and suspended materials, a sheen on the surface, discolorations, turbidity, odors, and source(s) of any observed pollutants.

g. Within two business days (48 hours) after each qualifying rain event, Risk Level 1 dischargers shall conduct post rain event visual observations (inspections) to (1) identify whether BMPs were adequately designed, implemented, and effective, and (2) identify additional BMPs and revise the SWPPP accordingly.

h. Risk Level 1 dischargers shall maintain on-site records of all visual observations (inspections), personnel performing the observations, observation dates, weather conditions, locations observed, and corrective actions taken in response to the observations.

4. **Risk Level 1 – Visual Observation Exemptions**

a. Risk Level 1 dischargers shall be prepared to conduct visual observation (inspections) until the minimum requirements of Section I.3 above are completed. Risk Level 1 dischargers are not required to conduct visual observation (inspections) under the following conditions:

i. During dangerous weather conditions such as flooding and electrical storms.

ii. Outside of scheduled site business hours.

b. If no required visual observations (inspections) are collected due to these exceptions, Risk Level 1 dischargers shall include an explanation in their SWPPP and in the Annual Report documenting why the visual observations (inspections) were not conducted.

5. **Risk Level 1 – Monitoring Methods**

Risk Level 1 dischargers shall include a description of the visual observation locations, visual observation procedures, and visual observation follow-up and tracking procedures in the CSMP.

6. **Risk Level 1 – Non-Storm Water Discharge Monitoring Requirements**

a. Visual Monitoring Requirements:

i. Risk Level 1 dischargers shall visually observe (inspect) each drainage area for the presence of (or indications of prior) unauthorized and authorized non-storm water discharges and their sources.

ii. Risk Level 1 dischargers shall conduct one visual observation (inspection) quarterly in each of the following periods: January-March, April-June, July-September, and October-December. Visual observation (inspections) are only required during daylight hours (sunrise to sunset).

iii. Risk Level 1 dischargers shall ensure that visual observations (inspections) document the presence or evidence of any non-storm water discharge (authorized or unauthorized), pollutant characteristics (floating and suspended material, sheen, discoloration, turbidity, odor, etc.), and source. Risk Level 1 dischargers shall maintain on-site records indicating the personnel performing the visual observation (inspections), the dates and approximate time each drainage area and non-storm water discharge was observed, and the response taken to eliminate unauthorized non-storm water discharges and to reduce or prevent pollutants from contacting non-storm water discharges.

7. **Risk Level 1 – Non-Visible Pollutant Monitoring Requirements**

a. Risk Level 1 dischargers shall collect one or more samples during any breach, malfunction, leakage, or spill observed during a visual inspection which could result in the discharge of pollutants to surface waters that would not be visually detectable in storm water.

b. Risk Level 1 dischargers shall ensure that water samples are large enough to characterize the site conditions.

c. Risk Level 1 dischargers shall collect samples at all discharge locations that can be safely accessed.

d. Risk Level 1 dischargers shall collect samples during the first two hours of discharge from rain events that occur during business hours and which generate runoff.

e. Risk Level 1 dischargers shall analyze samples for all non-visible pollutant parameters (if applicable) - parameters indicating the

presence of pollutants identified in the pollutant source assessment required (Risk Level 1 dischargers shall modify their CSMPs to address these additional parameters in accordance with any updated SWPPP pollutant source assessment).

f. Risk Level 1 dischargers shall collect a sample of storm water that has not come in contact with the disturbed soil or the materials stored or used on-site (uncontaminated sample) for comparison with the discharge sample.

g. Risk Level 1 dischargers shall compare the uncontaminated sample to the samples of discharge using field analysis or through laboratory analysis.[2]

h. Risk Level 1 dischargers shall keep all field /or analytical data in the SWPPP document.

8. **Risk Level 1 – Particle Size Analysis for Project Risk Justification**

Risk Level 1 dischargers justifying an alternative project risk shall report a soil particle size analysis used to determine the RUSLE K-Factor. ASTM D-422 (Standard Test Method for Particle-Size Analysis of Soils), as revised, shall be used to determine the percentages of sand, very fine sand, silt, and clay on the site.

9. **Risk Level 1 – Records**

Risk Level 1 dischargers shall retain records of all storm water monitoring information and copies of all reports (including Annual Reports) for a period of at least three years. Risk Level 1 dischargers shall retain all records on-site while construction is ongoing. These records include:

a. The date, place, time of facility inspections, sampling, visual observation (inspections), and/or measurements, including precipitation.

b. The individual(s) who performed the facility inspections, sampling, visual observation (inspections), and or measurements.

c. The date and approximate time of analyses.

d. The individual(s) who performed the analyses.

---

[2] For laboratory analysis, all sampling, sample preservation, and analyses must be conducted according to test procedures under 40 CFR Part 136. Field discharge samples shall be collected and analyzed according to the specifications of the manufacturer of the sampling devices employed.

e. A summary of all analytical results from the last three years, the method detection limits and reporting units, and the analytical techniques or methods used.

f. Rain gauge readings from site inspections.

g. Quality assurance/quality control records and results.

h. Non-storm water discharge inspections and visual observation (inspections) and storm water discharge visual observation records (see Sections I.3 and I.6 above).

i. Visual observation and sample collection exception records (see Section I.4 above).

j. The records of any corrective actions and follow-up activities that resulted from analytical results, visual observation (inspections), or inspections.

Riverside County Board of Supervisors
Request to Speak

Submit request to Clerk of Board (right of podium), Speakers are entitled to three (3) minutes, subject to Board Rules listed on the reverse side of this form.

SPEAKER'S NAME: Paul Jacobs

Address: _____
(only if follow-up mail response requested)

City: Temecula **Zip:** _____

Phone #: _____

Date: 1/6/15 **Agenda #** 3-42

PLEASE STATE YOUR POSITION BELOW:

Position on "Regular" (non-appealed) Agenda Item:

_____**Support** _____**Oppose** _____**Neutral**

Note: If you are here for an agenda item that is filed for "Appeal", please state separately your position on the appeal below:

_____**Support** _____**Oppose** _____**Neutral**

I give my 3 minutes to: _____

BOARD RULES

Requests to Address Board on "Agenda" Items:

You may request to be heard on a published agenda item. Requests to be heard must be submitted to the Clerk of the Board before the scheduled meeting time.

Requests to Address Board on items that are "NOT" on the Agenda:

Notwithstanding any other provisions of these rules, member of the public shall have the right to address the Board during the mid-morning "Oral Communications" segment of the published agenda. Said purpose for address must pertain to issues which are under the direct jurisdiction of the Board of Supervisors. YOUR TIME WILL BE LIMITED TO THREE (3) MINUTES.

Power Point Presentations/Printed Material:

Speakers who intend to conduct a formalized Power Point presentation or provide printed material must notify the Clerk of the Board's Office by 12 noon on the Monday preceding the Tuesday Board meeting, insuring that the Clerk's Office has sufficient copies of all printed materials and at least one (1) copy of the Power Point CD. Copies of printed material given to the Clerk (by Monday noon deadline) will be provided to each Supervisor. If you have the need to use the overhead "Elmo" projector at the Board meeting, please insure your material is clear and with proper contrast, notifying the Clerk well ahead of the meeting, of your intent to use the Elmo.

Individual Speaker Limits:

Individual speakers are limited to a maximum of three (3) minutes. Please step up to the podium when the Chairman calls your name and begin speaking immediately. Pull the microphone to your mouth so that the Board, audience, and audio recording system hear you clearly. Once you start speaking, the "green" podium light will light. The "yellow" light will come on when you have one (1) minute remaining. When you have 30 seconds remaining, the "yellow" light will begin flash, indicating you must quickly wrap up your comments. Your time is up when the "red" light flashes. The Chairman adheres to a strict three (3) minutes per speaker. ***Note: If you intend to give your time to a "Group/Organized Presentation", please state so clearly at the very bottom of the reverse side of this form.***

Group/Organized Presentations:

Group/organized presentations with more than one (1) speaker will be limited to nine (9) minutes at the Chairman's discretion. The organizer of the presentation will automatically receive the first three (3) minutes, with the remaining six (6) minutes relinquished by other speakers, as requested by them on a completed "Request to Speak" form, and clearly indicated at the front bottom of the form.

Addressing the Board & Acknowledgement by Chairman:

The Chairman will determine what order the speakers will address the Board, and will call on all speakers in pairs. The first speaker should immediately step to the podium and begin addressing the Board. The second speaker should take up a position in one of the chamber aisles in order to quickly step up to the podium after the preceding speaker. This is to afford an efficient and timely Board meeting, giving all attendees the opportunity to make their case. Speakers are prohibited from making personal attacks, and/or using coarse, crude, profane or vulgar language while speaking to the Board members, staff, the general public and/or meeting participants. Such behavior, at the discretion of the Board Chairman may result in removal from the Board Chambers by Sheriff Deputies.

Riverside County Board of Supervisors
Request to Speak

Submit request to Clerk of Board (right of podium), Speakers are entitled to three (3) minutes, subject to Board Rules listed on the reverse side of this form.

SPEAKER'S NAME: GARRY GRANT

Address: _____
(only if follow-up mail response requested)

City: _____ **Zip:** _____

Phone #: _____

Date: 6 JAN 015 **Agenda #** 3-42

PLEASE STATE YOUR POSITION BELOW:

Position on "Regular" (non-appealed) Agenda Item:

_____**Support** ___X___**Oppose** _____**Neutral**

Note: If you are here for an agenda item that is filed for "Appeal", please state separately your position on the appeal below:

_____**Support** _____**Oppose** _____**Neutral**

I give my 3 minutes to: _____

BOARD RULES

Requests to Address Board on "Agenda" Items:

You may request to be heard on a published agenda item. Requests to be heard must be submitted to the Clerk of the Board before the scheduled meeting time.

Requests to Address Board on items that are "NOT" on the Agenda:

Notwithstanding any other provisions of these rules, member of the public shall have the right to address the Board during the mid-morning "Oral Communications" segment of the published agenda. Said purpose for address must pertain to issues which are under the direct jurisdiction of the Board of Supervisors. YOUR TIME WILL BE LIMITED TO THREE (3) MINUTES.

Power Point Presentations/Printed Material:

Speakers who intend to conduct a formalized Power Point presentation or provide printed material must notify the Clerk of the Board's Office by 12 noon on the Monday preceding the Tuesday Board meeting, insuring that the Clerk's Office has sufficient copies of all printed materials and at least one (1) copy of the Power Point CD. Copies of printed material given to the Clerk (by Monday noon deadline) will be provided to each Supervisor. If you have the need to use the overhead "Elmo" projector at the Board meeting, please insure your material is clear and with proper contrast, notifying the Clerk well ahead of the meeting, of your intent to use the Elmo.

Individual Speaker Limits:

Individual speakers are limited to a maximum of three (3) minutes. Please step up to the podium when the Chairman calls your name and begin speaking immediately. Pull the microphone to your mouth so that the Board, audience, and audio recording system hear you clearly. Once you start speaking, the "green" podium light will light. The "yellow" light will come on when you have one (1) minute remaining. When you have 30 seconds remaining, the "yellow" light will begin flash, indicating you must quickly wrap up your comments. Your time is up when the "red" light flashes. The Chairman adheres to a strict three (3) minutes per speaker. ***Note: If you intend to give your time to a "Group/Organized Presentation", please state so clearly at the very bottom of the reverse side of this form.***

Group/Organized Presentations:

Group/organized presentations with more than one (1) speaker will be limited to nine (9) minutes at the Chairman's discretion. The organizer of the presentation will automatically receive the first three (3) minutes, with the remaining six (6) minutes relinquished by other speakers, as requested by them on a completed "Request to Speak" form, and clearly indicated at the front bottom of the form.

Addressing the Board & Acknowledgement by Chairman:

The Chairman will determine what order the speakers will address the Board, and will call on all speakers in pairs. The first speaker should immediately step to the podium and begin addressing the Board. The second speaker should take up a position in one of the chamber aisles in order to quickly step up to the podium after the preceding speaker. This is to afford an efficient and timely Board meeting, giving all attendees the opportunity to make their case. Speakers are prohibited from making personal attacks, and/or using coarse, crude, profane or vulgar language while speaking to the Board members, staff, the general public and/or meeting participants. Such behavior, at the discretion of the Board Chairman may result in removal from the Board Chambers by Sheriff Deputies.