Riverside County Transportation Department
Summary of Bids
Advertised: June 2, 2015 (Agenda Item: 3-28)
Addenda: 1 (6/25/2015), 2 (7/09/2015), 3 (7/16/2015), 4 (7/24/2015), 5 (7/29/15), 6 (8/6/2015)
Bids Open: 2 pm Date: Wednesday, August 12, 2015

PROJECT: Clinton Keith Road Construction Project - Phase 2
From Whitewood Road to Leon Road
In the City of Murrieta and French Valley Area
Project No. B2-04722

ALTERNATE BID SCHEDULE 2: CLINTON KEITH ROAD, 4-LANE OPTION

					4 Shimmick Construction Co., Inc. Irvine, CA 92618		5 Coffman Specialties, Inc. San Diego, CA 92126	
ITEM NO.	ITEM CODE	CONTRACT ITEM	UNITS	QUANTITY	BID UNIT PRICE	BID ESTIMATE	BID UNIT PRICE	BID ESTIMATE
241	800360	CHAIN LINK FENCE (TYPE CL-6)	LF	1,775	16.00	28,400.00	16.50	29,287.50
242	800360A	FENCE (TYPE BW)	LF	870	10.00	8,700.00	9.40	8,178.00
243	800365	CHAIN LINK FENCE (TYPE CL-6,SLATTED)	LF	290	35.00	10,150.00	35.00	10,150.00
244	801100	WIRE MESH GATE (3/8"x3/8" MESH)	EA	4	1,500.00	6,000.00	1,300.00	5,200.00
245	801365A	TUBULAR STEEL GATE	EA	4	4,000.00	16,000.00	4,400.00	17,600.00
246	802620	16' CHAIN LINK GATE (TYPE CL-6)	EA	2	1,800.00	3,600.00	1,750.00	3,500.00
247	000003	WROUGHT IRON FENCE	LF	205	65.00	13,325.00	65.00	13,325.00
248	(F) 833000	METAL RAILING	LF	840	90.00	75,600.00	85.00	71,400.00
249	833020	CHAIN LINK RAILING	LF	415	40.00	16,600.00	40.00	16,600.00
250	839521	CABLE RAILING	LF	302	35.00	10,570.00	35.00	10,570.00
251	839601	CRASH CUSHION (TYPE CAT)	EA	2	5,000.00	10,000.00	4,320.00	8,640.00
252	839602	CRASH CUSHION (TYPE CAT BACKUP)	EA	2	5,000.00	10,000.00	4,320.00	8,640.00
253	839701	CONCRETE BARRIER (TYPE 60)	LF	4,280	70.00	299,600.00	40.00	171,200.00
254	(F) 839702	CONCRETE BARRIER (TYPE 60A)	LF	840	120.00	100,800.00	90.00	75,600.00
255	839703	CONCRETE BARRIER (TYPE 60C)	LF	34	150.00	5,100.00	380.00	12,920.00
256	839705	CONCRETE BARRIER (TYPE 60E MODIFIED)	LF	220	80.00	17,600.00	125.00	27,500.00
257	839726	CONCRETE BARRIER (TYPE 736A)	LF	415	100.00	41,500.00	90.00	37,350.00
258	(F) 839727	CONCRETE BARRIER (TYPE 736 MODIFIED)	LF	840	150.00	126,000.00	118.00	99,120.00
259	840504	4" THERMOPLASTIC TRAFFIC STRIPE	LF	72,085	0.50	36,042.50	0.15	10,812.75
260	840505	6" THERMOPLASTIC TRAFFIC STRIPE	LF	413	1.00	413.00	1.00	413.00
261	840506	8" THERMOPLASTIC TRAFFIC STRIPE	LF	5,103	1.00	5,103.00	1.00	5,103.00
262	840519	THERMOPLASTIC CROSSWALK AND PAVEMENT MARKING	SQFT	2,885	3.00	8,655.00	3.30	9,520.50
263	850111	PAVEMENT MARKER (RETROREFLECTIVE)	EA	1,680	3.00	5,040.00	1.25	2,100.00
264	860251	SIGNAL AND LIGHTING (CLINTON KEITH/MENIFEE)	LS	1	75,000.00	75,000.00	250,000.00	250,000.00
265	860251	SIGNAL AND LIGHTING (CLINTON KEITH/ TROIS VALLEY)	LS	1	75,000.00	75,000.00	250,000.00	250,000.00
266	860556	SOLAR LIGHTING ON WILDLIFE CROSSING (8 LIGHTS)	LS	1	25,000.00	25,000.00	50,000.00	50,000.00
267	860557	SOLAR LIGHTING ON WARM SPRINGS CREEK BRIDGE (4 LIGHTS)	LS	1	15,000.00	15,000.00	35,000.00	35,000.00
268	(F) 860704A	2" INTERCONNECT CONDUIT AND TRACER WIRE	LF	2,800	15.00	42,000.00	25.00	70,000.00
269	861497	MODIFY SIGNAL AND LIGHTING (CLINTON KEITH/WHITEWOOD)	LS	1	75,000.00	75,000.00	100,000.00	100,000.00
270	(F) 867014	12 SINGLE MODE FIBER OPTIC CABLE	LF	2,800	20.00	56,000.00	5.00	14,000.00
271	869039A	NO.6 PULL BOX	EA	11	1,000.00	11,000.00	750.00	8,250.00
272	019901	MOBILIZATION,DEMOBILZATION, AND FINAL CLEAN UP	LS	1	1,761,000.00	1,761,000.00	1,761,000.00	1,761,000.00
272.A	20052A	TREE TOPPING	LS	1	15,000.00	15,000.00	45,000.00	45,000.00
272.B	000003	DRAINAGE INLET FILTRATION SYSTEM (KRISTAR FLOGARD)	EA	2	5,000.00	10,000.00	7,500.00	15,000.00
272.C	000003	DRAINAGE INLET FILTRATION SYSTEM (CLEARWATER)	EA	1	5,000.00	5,000.00	7,500.00	7,500.00
		ALTERNATE BID SCHEDULE 2, 4-LANE OPTION, TOTAL ITEMS 133 - 272.C				**25,858,614.40**		**26,140,840.02**

Riverside County Transportation Department
Summary of Bids

Advertised: June 2, 2015 (Agenda Item: 3-28)
Addenda: 1 (6/25/2015), 2 (7/09/2015), 3 (7/16/2015), 4 (7/24/2015), 5 (7/29/15), 6 (8/6/2015)
Bids Open: 2 pm Date: Wednesday, August 12, 2015

PROJECT: Clinton Keith Road Construction Project - Phase 2
From Whitewood Road to Leon Road
In the City of Murrieta and French Valley Area
Project No. B2-04722

ALTERNATE BID SCHEDULE 3: EASTERN MUNICIPAL WATER DISTRICT					4 Shimmick Construction Co., Inc. Irvine, CA 92618		5 Coffman Specialties, Inc. San Diego, CA 92126	
ITEM NO.	ITEM CODE	CONTRACT ITEM	UNITS	QUANTITY	BID UNIT PRICE	BID ESTIMATE	BID UNIT PRICE	BID ESTIMATE
273	000003	EMWD WATER LINE THROUGH WARM SPRINGS CREEK	LS	1	100,000.00	100,000.00	180,000.00	180,000.00
		ALTERNATE BID SCHEDULE 3 TOTAL ITEM 273				**100,000.00**		**180,000.00**

ALTERNATE BID SCHEDULE 4: DEMOLISH BUILDINGS					4 Shimmick Construction Co., Inc. Irvine, CA 92618		5 Coffman Specialties, Inc. San Diego, CA 92126	
ITEM NO.	ITEM CODE	CONTRACT ITEM	UNITS	QUANTITY	BID UNIT PRICE	BID ESTIMATE	BID UNIT PRICE	BID ESTIMATE
274	000003	DEMOLISH BUILDINGS	LS	1	10,000.00	10,000.00	50,000.00	50,000.00
		ALTERNATE BID SCHEDULE 4 TOTAL ITEM 274				**10,000.00**		**50,000.00**

	4 Shimmick Construction Co., Inc. Irvine, CA 92618	5 Coffman Specialties, Inc. San Diego, CA 92126
ALTERNATE BID SCHEDULES 1, 2, 3, AND 4 TOTAL ITEMS 1 - 274	**49,527,120.80**	**50,515,339.02**

Riverside County Transportation Department
Summary of Bids
Advertised: June 2, 2015 (Agenda Item: 3-28)
Addenda: 1 (6/25/2015), 2 (7/09/2015), 3 (7/16/2015), 4 (7/24/2015), 5 (7/29/15), 6 (8/6/2015)
Bids Open: 2 pm Date: Wednesday, August 12, 2015

PROJECT: Clinton Keith Road Construction Project - Phase 2
From Whitewood Road to Leon Road
In the City of Murrieta and French Valley Area
Project No. B2-04722

ALTERNATE BID SCHEDULE 1: CLINTON KEITH ROAD, 2-LANE OPTION

					6 Pulice Construction, Inc. San Diego, CA 92108		7 Riverside Construction Co., Inc. Riverside, CA 92502	
ITEM NO.	ITEM CODE	CONTRACT ITEM	UNITS	QUANTITY	BID UNIT PRICE	BID ESTIMATE	BID UNIT PRICE	BID ESTIMATE
1	016101	OBTAIN ENCROACHMENT PERMIT	FA	1	5,000.00	5,000.00	5,000.00	5,000.00
2	017101	MANHOLE (RCFC & WCDS MH 251)	EA	15	6,800.00	102,000.00	7,000.00	105,000.00
3	017103	MANHOLE (RCFC & WCDS MH 252)	EA	8	8,600.00	68,800.00	5,500.00	44,000.00
4	017105	JUNCTION STRUCTURE (RCFC & WCDS JS 227)	EA	17	1,800.00	30,600.00	3,000.00	51,000.00
5	017114	TRANSITION STRUCTURE (RCFC & WCDS TS 303)	EA	1	2,200.00	2,200.00	8,000.00	8,000.00
6	017305	MINOR CONCRETE (TYPE A-8 CURB) (CRS 201)	LF	9,141	17.50	159,967.50	14.00	127,974.00
7	017306	MINOR CONCRETE (CURB RAMP) (CRS 403)	EA	5	3,300.00	16,500.00	3,500.00	17,500.00
8	017307	MINOR CONCRETE (TYPE "C" CURB) (CRS 202)(MOD)	LF	257	21.50	5,525.50	30.00	7,710.00
9	017309	MINOR CONCRETE (TYPE "D" CURB) (CRS 204)	LF	4,008	16.00	64,128.00	12.00	48,096.00
10	019902	COURSE OF CONSTRUCTION INSURANCE	LS	1	65,000.00	65,000.00	65,000.00	65,000.00
11	000001	ITEM DELETED BY ADDENDUM No. 5	---	---	---	---	---	---
12	066102	DUST ABATEMENT	LS	1	41,900.00	41,900.00	50,000.00	50,000.00
13	066105	RESIDENT ENGINEERS OFFICE	LS	1	60,000.00	60,000.00	60,000.00	60,000.00
14	066610	PARTNERING	LS	1	15,800.00	15,800.00	2,500.00	2,500.00
15	070010	PROGRESS SCHEDULE (CRITICAL PATH)	LS	1	15,000.00	15,000.00	15,000.00	15,000.00
16	070030	LEAD COMPLIANCE PLAN	LS	1	1,500.00	1,500.00	2,500.00	2,500.00
17	071321	TEMPORARY FENCE (TYPE CL-6)	LF	908	16.50	14,982.00	6.00	5,448.00
18	071325	TEMPORARY FENCE (TYPE ESA)	LF	2,770	3.50	9,695.00	6.00	16,620.00
19	074016	CONSTRUCTION SITE MANAGEMENT	LS	1	62,900.00	62,900.00	200,000.00	200,000.00
20	120090	CONSTRUCTION AREA SIGNS	LS	1	8,000.00	8,000.00	25,000.00	25,000.00
21	120100	TRAFFIC CONTROL SYSTEM	LS	1	43,300.00	43,300.00	25,000.00	25,000.00
22	120165	CHANNELIZER (SURFACE MOUNTED)	EA	17	25.00	425.00	50.00	850.00
23	130300	PREPARE STORM WATER POLLUTION PREVENTION PLAN	LS	1	30,000.00	30,000.00	30,000.00	30,000.00
24	150606	REMOVE FENCE (TYPE BW)	LF	1,197	3.00	3,591.00	4.00	4,788.00
25	150608	REMOVE CHAIN LINK FENCE	LF	3,179	4.00	12,716.00	4.00	12,716.00
26	000003	REMOVE CHAIN LNK FENCE (SLATTED)	LF	285	7.00	1,995.00	6.00	1,710.00
27	150662	REMOVE METAL BEAM GUARD RAIL	LF	110	18.00	1,980.00	35.00	3,850.00
28	150711	REMOVE PAINTED TRAFFIC STRIPE	LF	7,913	1.50	11,869.50	0.60	4,747.80
29	150712	REMOVE PAINTED PAVEMENT MARKING	SQFT	1,104	2.50	2,760.00	1.70	1,876.80
30	150742	REMOVE ROADSIDE SIGN	EA	13	134.00	1,742.00	100.00	1,300.00
31	150771	REMOVE ASPHALT CONCRETE DIKE	LF	35	11.00	385.00	10.00	350.00
32	152390	RELOCATE ROADSIDE SIGN	EA	4	247.00	988.00	250.00	1,000.00
33	153103	COLD PLANE AND ASPHALT CONCRETE PAVEMENT	SQYD	632	10.00	6,320.00	8.00	5,056.00
34	153130	REMOVE CONCRETE CURB	LF	77	8.00	616.00	10.00	770.00
35	153121	REMOVE CONCRETE (CURB AND GUTTER)	LF	348	6.00	2,088.00	10.00	3,480.00
36	153218	REMOVE CONCRETE SIDEWALK	SQFT	1,534	6.00	9,204.00	1.00	1,534.00
37	153242A	REMOVE CONCRETE (CURB RAMP)	EA	1	550.00	550.00	1,500.00	1,500.00

Riverside County Transportation Department
Summary of Bids
Advertised: June 2, 2015 (Agenda Item: 3-28)
Addenda: 1 (6/25/2015), 2 (7/09/2015), 3 (7/16/2015), 4 (7/24/2015), 5 (7/29/15), 6 (8/6/2015)
Bids Open: 2 pm Date: Wednesday, August 12, 2015

PROJECT: Clinton Keith Road Construction Project - Phase 2
From Whitewood Road to Leon Road
In the City of Murrieta and French Valley Area
Project No. B2-04722

ALTERNATE BID SCHEDULE 1: CLINTON KEITH ROAD, 2-LANE OPTION

					6 Pulice Construction, Inc. San Diego, CA 92108		7 Riverside Construction Co., Inc. Riverside, CA 92502	
ITEM NO.	ITEM CODE	CONTRACT ITEM	UNITS	QUANTITY	BID UNIT PRICE	BID ESTIMATE	BID UNIT PRICE	BID ESTIMATE
38	160101	CLEARING AND GRUBBING	LS	1	250,000.00	250,000.00	250,000.00	250,000.00
39	170101	DEVELOP WATER SUPPLY	LS	1	50,000.00	50,000.00	50,000.00	50,000.00
40	(F) 190101	ROADWAY EXCAVATION	CY	420,501	10.00	4,205,010.00	10.50	4,415,260.50
41	190160	ROCK EXCAVATION	CY	70,000	5.00	350,000.00	4.00	280,000.00
42	(F) 192003	STRUCTURE EXCAVATION (BRIDGE)	CY	954	16.00	15,264.00	30.00	28,620.00
43	(F) 192037	STRUCTURE EXCAVATION (RETAINING WALL)	CY	2,974	17.00	50,558.00	80.00	237,920.00
44	(F) 193003	STRUCTURE BACKFILL (BRIDGE)	CY	585	87.00	50,895.00	150.00	87,750.00
45	(F) 193013	STRUCTURE BACKFILL (RETAINING WALL)	CY	2,432	34.50	83,904.00	8.00	19,456.00
46	(F) 193031	PERVIOUS BACKFILL (RETAINING WALL)	CY	81	68.00	5,508.00	125.00	10,125.00
47	198205A	SUBGRADE ENHANCEMENT GEOTEXTILE (MULTI-AXIAL)	SQYD	52,975	5.00	264,875.00	5.00	264,875.00
48	201600A	CONCRETE PAVER (TURFSTONE)	SQFT	1,800	9.00	16,200.00	7.50	13,500.00
49	203031	EROSION CONTROL (TYPE D)	SQFT	22,486	0.15	3,372.90	0.15	3,372.90
50	204099	PLANT ESTABLISHMENT WORK	LS	1	5,000.00	5,000.00	50,000.00	50,000.00
51	210250	EROSION CONTROL (BONDED FIBER MATRIX WITH SEEDS)	SQFT	1,201,338	0.20	240,267.60	0.16	192,214.08
52	210350	FIBER ROLLS	LF	69,185	2.50	172,962.50	3.00	207,555.00
53	210430A	HYDROSEED (WILDLIFE OVERCROSSING)	SQFT	137,692	0.50	68,846.00	0.30	41,307.60
54	210430B	HYDROSEED (RIPARIAN AREA)	SQFT	25,102	0.15	3,765.30	0.15	3,765.30
55	220101	FINISHING ROADWAY	LS	1	25,500.00	25,500.00	50,000.00	50,000.00
56	260203	CLASS 2 AGGREGATE BASE	CY	14,127	28.00	395,556.00	30.00	423,810.00
57	270014	CEMENT TREATED BASE (PLANT-MIXED, CLASS A) [BUS TURNOUT]	CY	86	140.00	12,040.00	225.00	19,350.00
58	390129	HOT MIX ASPHALT (TYPE C)	TON	10,821	57.00	616,797.00	58.00	627,618.00
59	390132	HOT MIX ASPHALT (TYPE A)	TON	7,240	64.00	463,360.00	65.00	470,600.00
60	394075	PLACE HOT MIX ASPHALT DIKE (TYPE D)	LF	1,414	11.00	15,554.00	5.00	7,070.00
61	405030	PORTLAND CEMENT CONCRETE [BUS TURNOUT]	CY	122	298.00	36,356.00	165.00	20,130.00
62	490603	24" CAST-IN-DRILLED-HOLE CONCRETE PILING	LF	3,621	264.00	955,944.00	95.00	343,995.00
63	490617	90" CAST-IN-DRILLED-HOLE CONCRETE PILING	LF	374	4,115.00	1,539,010.00	2,900.00	1,084,600.00
64	500001	PRESTRESSING CAST-IN-PLACE CONCRETE	LS	1	198,600.00	198,600.00	200,000.00	200,000.00
65	(F) 510051	STRUCTURAL CONCRETE, BRIDGE FOOTING	CY	313	280.00	87,640.00	400.00	125,200.00
66	(F) 510053	STRUCTURAL CONCRETE, BRIDGE	CY	4,342	637.00	2,765,854.00	975.00	4,233,450.00
67	(F) 510060	STRUCTURAL CONCRETE (RETAINING WALL)	CY	620	600.00	372,000.00	330.00	204,600.00
68	(F) 510086	STRUCTURAL CONCRETE, APPROACH SLAB (TYPE N)	CY	293	370.00	108,410.00	550.00	161,150.00
69	(F) 510502	MINOR CONCRETE (MINOR STRUCTURE)	CY	249	1,620.00	403,380.00	1,500.00	373,500.00
70	510502A	MINOR CONCRETE (RETAINING WALL)	CY	11	500.00	5,500.00	450.00	4,950.00
71	(F) 510526	MINOR CONCRETE (BACKFILL)	CY	9	176.00	1,584.00	175.00	1,575.00
72	(F) 511035	FRACTURED BASALT TEXTURE	SQFT	3,582	17.00	60,894.00	17.00	60,894.00
73	519092	JOINT SEAL ASSEMBLY (MR=2 1/2")	LF	273	350.00	95,550.00	285.00	77,805.00
74	(F) 519200A	WILDLIFE OVERCROSSING AND RETAINING WALL SYSTEM	LS	1	2,700,000.00	2,700,000.00	2,850,000.00	2,850,000.00

Riverside County Transportation Department
Summary of Bids
Advertised: June 2, 2015 (Agenda Item: 3-28)
Addenda: 1 (6/25/2015), 2 (7/09/2015), 3 (7/16/2015), 4 (7/24/2015), 5 (7/29/15), 6 (8/6/2015)
Bids Open: 2 pm Date: Wednesday, August 12, 2015

PROJECT: Clinton Keith Road Construction Project - Phase 2
From Whitewood Road to Leon Road
In the City of Murrieta and French Valley Area
Project No. B2-04722

ALTERNATE BID SCHEDULE 1: CLINTON KEITH ROAD, 2-LANE OPTION

					6 Pulice Construction, Inc. San Diego, CA 92108		7 Riverside Construction Co., Inc. Riverside, CA 92502	
ITEM NO.	ITEM CODE	CONTRACT ITEM	UNITS	QUANTITY	BID UNIT PRICE	BID ESTIMATE	BID UNIT PRICE	BID ESTIMATE
75	519205A	WILDLIFE UNDERCROSSING SKYLIGHT	EA	6	9,400.00	56,400.00	4,000.00	24,000.00
76	(F) 520102	BAR REINFORCING STEEL (BRIDGE)	LB	1,233,974	0.90	1,110,576.60	0.85	1,048,877.90
77	(F) 520103	BAR REINFORCING STEEL (RETAINING WALL)	LB	59,816	0.80	47,852.80	0.75	44,862.00
78	560252	FURNISH SINGLE SHEET ALUMINUM SIGN (0.80" - FRAMED)	SQFT	397	19.00	7,543.00	20.00	7,940.00
79	566011	ROADSIDE SIGN - ONE POST	EA	66	345.00	22,770.00	200.00	13,200.00
80	568001	INSTALL SIGN (STRAP AND SADDLE BRACKET METHOD)	EA	7	125.00	875.00	175.00	1,225.00
81	598001	ANTI-GRAFFITI COATING	SQFT	3,582	2.00	7,164.00	1.00	3,582.00
82	641125	36" PLASTIC PIPE	LF	428	89.00	38,092.00	185.00	79,180.00
83	650411	18" REINFORCED CONCRETE PIPE (CLASS IV)	LF	592	75.00	44,400.00	135.00	79,920.00
84	650416	24" REINFORCED CONCRETE PIPE (CLASS IV)	LF	4,510	94.00	423,940.00	95.00	428,450.00
85	650420	30" REINFORCED CONCRETE PIPE (CLASS IV)	LF	1,095	125.00	136,875.00	120.00	131,400.00
86	650424	36" REINFORCED CONCRETE PIPE (CLASS IV)	LF	1,958	192.00	375,936.00	140.00	274,120.00
87	650440	60" REINFORCED CONCRETE PIPE (CLASS IV)	LF	534	360.00	192,240.00	300.00	160,200.00
88	650480A	36" WILDLIFE CULVERT	LF	415	195.00	80,925.00	185.00	76,775.00
89	650432	48" REINFORCED CONCRETE PIPE (CLASS IV)	LF	234	256.00	59,904.00	240.00	56,160.00
90	665117	18" BITUMINOUS COATED STEEL PIPE (0.079" THICK)	LF	151	123.00	18,573.00	60.00	9,060.00
91	665136	36" BITUMINOUS COATED STEEL PIPE (0.079" THICK)	LF	134	240.00	32,160.00	100.00	13,400.00
92	665137	36" BITUMINOUS COATED STEEL PIPE RISER (0.109" THICK)	LF	24	911.00	21,864.00	635.00	15,240.00
92.A	692007	18" ENTRANCE TAPER	EA	2	1,500.00	3,000.00	8,000.00	16,000.00
93	703233	GRATED LINE DRAIN	LF	1,738	98.00	170,324.00	60.00	104,280.00
94	705011	18" STEEL FLARED END SECTION	EA	2	477.00	954.00	750.00	1,500.00
95	705048	36" STEEL FLARED END SECTION	EA	1	1,250.00	1,250.00	950.00	950.00
96	000001	ITEM DELETED BY ADDENDUM No. 1	—	—	—	—	—	—
97	721015	ROCK SLOPE PROTECTION (LIGHT, METHOD B)	CY	257	58.00	14,906.00	48.00	12,336.00
98	721017	ROCK SLOPE PROTECTION (FACING, METHOD B)	CY	3,109	44.00	136,796.00	48.00	149,232.00
99	(F) 721030	ROCK SLOPE PROTECTION (1/2 TON, METHOD B)	CY	117	80.00	9,360.00	48.00	5,616.00
100	729010	ROCK SLOPE PROTECTION FABRIC	SQYD	7,115	3.00	21,345.00	5.00	35,575.00
100.A	731511	MINOR CONCRETE (ISLAND PAVING)	CY	58	463.00	26,854.00	350.00	20,300.00
100.B	000003	MINOR CONCRETE (PEDESTRIAN GUARD)	LF	81	175.00	14,175.00	350.00	28,350.00
101	731516	MINOR CONCRETE (DRIVEWAY)	CY	17	295.00	5,015.00	500.00	8,500.00
102	731521	MINOR CONCRETE (SIDEWALK)	CY	765	306.00	234,090.00	225.00	172,125.00
103	(F) 750001	MISCELLANEOUS IRON AND STEEL	LB	11,274	6.00	67,644.00	3.00	33,822.00
104	(F) 750501	MISCELLANEOUS METAL (BRIDGE)	LB	38,307	10.00	383,070.00	5.00	191,535.00
105	800000A	ONE WAY ACCESS OPENING	EA	9	1,000.00	9,000.00	5,000.00	45,000.00
106	800300	WIRE MESH FENCE (3/8"x3/8" MESH)	LF	9,265	41.00	379,865.00	40.00	370,600.00
107	800360	CHAIN LINK FENCE (TYPE CL-6)	LF	1,775	16.50	29,287.50	15.00	26,625.00
108	800360A	FENCE (TYPE BW)	LF	870	9.50	8,265.00	10.00	8,700.00

Riverside County Transportation Department
Summary of Bids
Advertised: June 2, 2015 (Agenda Item: 3-28)
Addenda: 1 (6/25/2015), 2 (7/09/2015), 3 (7/16/2015), 4 (7/24/2015), 5 (7/29/15), 6 (8/6/2015)
Bids Open: 2 pm Date: Wednesday, August 12, 2015

PROJECT: Clinton Keith Road Construction Project - Phase 2
From Whitewood Road to Leon Road
In the City of Murrieta and French Valley Area
Project No. B2-04722

ALTERNATE BID SCHEDULE 1: CLINTON KEITH ROAD, 2-LANE OPTION

					6 Pulice Construction, Inc. San Diego, CA 92108		7 Riverside Construction Co., Inc. Riverside, CA 92502	
ITEM NO.	ITEM CODE	CONTRACT ITEM	UNITS	QUANTITY	BID UNIT PRICE	BID ESTIMATE	BID UNIT PRICE	BID ESTIMATE
109	800365	CHAIN LINK FENCE (TYPE CL-6,SLATTED)	LF	290	35.00	10,150.00	35.00	10,150.00
110	801100	WIRE MESH GATE (3/8"x3/8" MESH)	EA	6	1,300.00	7,800.00	1,300.00	7,800.00
111	801365A	TUBULAR STEEL GATE	EA	3	4,500.00	13,500.00	4,500.00	13,500.00
112	802620	16' CHAIN LINK GATE (TYPE CL-6)	EA	2	1,750.00	3,500.00	1,750.00	3,500.00
113	(F) 833000	METAL RAILING	LF	840	86.00	72,240.00	85.00	71,400.00
114	839521	CABLE RAILING	LF	302	35.50	10,721.00	35.00	10,570.00
115	839601	CRASH CUSHION (TYPE CAT)	EA	2	4,320.00	8,640.00	4,500.00	9,000.00
116	839602	CRASH CUSHION (TYPE CAT BACKUP)	EA	2	4,320.00	8,640.00	4,500.00	9,000.00
117	839701	CONCRETE BARRIER (TYPE 60)	LF	4,210	62.00	261,020.00	40.00	168,400.00
118	(F) 839702	CONCRETE BARRIER (TYPE 60A)	LF	840	77.00	64,680.00	40.00	33,600.00
119	839703	CONCRETE BARRIER (TYPE 60C)	LF	34	383.00	13,022.00	200.00	6,800.00
120	839705	CONCRETE BARRIER (TYPE 60E MODIFIED)	LF	220	113.00	24,860.00	70.00	15,400.00
121	(F) 839727	CONCRETE BARRIER (TYPE 736 MODIFIED)	LF	840	99.00	83,160.00	165.00	138,600.00
122	840504	4" THERMOPLASTIC TRAFFIC STRIPE	LF	91,938	0.40	36,775.20	0.35	32,178.30
123	840506	8" THERMOPLASTIC TRAFFIC STRIPE	LF	5,961	1.00	5,961.00	0.70	4,172.70
124	840519	THERMOPLASTIC CROSSWALK AND PAVEMENT MARKING	SQFT	2,321	3.30	7,659.30	3.50	8,123.50
125	850111	PAVEMENT MARKER (RETROREFLECTIVE)	EA	1,873	3.50	6,555.50	3.00	5,619.00
126	860251	SIGNAL AND LIGHTING (CLINTON KEITH/ TROIS VALLEY)	LS	1	246,000.00	246,000.00	250,000.00	250,000.00
127	860556	SOLAR LIGHTING ON WILDLIFE CROSSING (8 LIGHTS)	LS	1	82,000.00	82,000.00	80,000.00	80,000.00
128	860557	SOLAR LIGHTING ON WARM SPRINGS CREEK BRIDGE (4 LIGHTS)	LS	1	85,000.00	85,000.00	85,000.00	85,000.00
129	(F) 860704A	2" INTERCONNECT CONDUIT AND TRACER WIRE	LF	2,550	10.00	25,500.00	10.00	25,500.00
130	861497	MODIFY SIGNAL AND LIGHTING (CLINTON KEITH/WHITEWOOD)	LS	1	92,000.00	92,000.00	90,000.00	90,000.00
131	869039A	NO.6 PULL BOX	EA	9	400.00	3,600.00	400.00	3,600.00
132	760090	MOBILIZATION,DEMOBILZATION, AND FINAL CLEAN UP	LS	1	1,591,000.00	1,591,000.00	1,050,000.00	1,050,000.00
132.A	20052A	TREE TOPPING	LS	1	4,700.00	4,700.00	35,000.00	35,000.00
132.B	000003	DRAINAGE INLET FILTRATION SYSTEM (KRISTAR FLOGARD)	EA	1	5,900.00	5,900.00	5,000.00	5,000.00
132.C	000003	DRAINAGE INLET FILTRATION SYSTEM (CLEARWATER)	EA	1	5,600.00	5,600.00	5,000.00	5,000.00
		ALTERNATE BID SCHEDULE 1, 2-LANE OPTION, TOTAL ITEMS 1 - 132.C				**24,549,459.70**		**24,328,446.38**

Riverside County Transportation Department
Summary of Bids
Advertised: June 2, 2015 (Agenda Item: 3-28)
Addenda: 1 (6/25/2015), 2 (7/09/2015), 3 (7/16/2015), 4 (7/24/2015), 5 (7/29/15), 6 (8/6/2015)
Bids Open: 2 pm Date: Wednesday, August 12, 2015

PROJECT: Clinton Keith Road Construction Project - Phase 2
From Whitewood Road to Leon Road
In the City of Murrieta and French Valley Area
Project No. B2-04722

ALTERNATE BID SCHEDULE 2: CLINTON KEITH ROAD, 4-LANE OPTION

					6 Pulice Construction, Inc. San Diego, CA 92108		7 Riverside Construction Co., Inc. Riverside, CA 92502	
ITEM NO.	ITEM CODE	CONTRACT ITEM	UNITS	QUANTITY	BID UNIT PRICE	BID ESTIMATE	BID UNIT PRICE	BID ESTIMATE
133	016101	OBTAIN ENCROACHMENT PERMIT	FA	1	5,000.00	5,000.00	5,000.00	5,000.00
134	017101	MANHOLE (RCFC & WCDS MH 251)	EA	11	6,500.00	71,500.00	7,000.00	77,000.00
135	017103	MANHOLE (RCFC & WCDS MH 252)	EA	6	9,100.00	54,600.00	5,500.00	33,000.00
136	017701A	MODIFIED MANHOLE 1	EA	4	7,600.00	30,400.00	7,000.00	28,000.00
137	017701B	MODIFIED MANHOLE 2	EA	2	8,200.00	16,400.00	5,000.00	10,000.00
138	017105	JUNCTION STRUCTURE (RCFC & WCDS JS 227)	EA	17	1,800.00	30,600.00	3,000.00	51,000.00
139	017114	TRANSITION STRUCTURE (RCFC & WCDS TS 303)	EA	1	2,200.00	2,200.00	8,000.00	8,000.00
140	017305	MINOR CONCRETE (TYPE A-8 CURB) (CRS 201)	LF	12,316	17.50	215,530.00	14.00	172,424.00
141	017306	MINOR CONCRETE (CURB RAMP) (CRS 403)	EA	7	2,830.00	19,810.00	3,500.00	24,500.00
142	017309	MINOR CONCRETE (TYPE "D" CURB) (CRS 204)	LF	1,273	16.50	21,004.50	15.00	19,095.00
143	019902	COURSE OF CONSTRUCTION INSURANCE	LS	1	65,000.00	65,000.00	65,000.00	65,000.00
144	000001	ITEM DELETED BY ADDENDUM No. 5	----	----	----	----	----	----
145	066102	DUST ABATEMENT	LS	1	41,900.00	41,900.00	50,000.00	50,000.00
146	066105	RESIDENT ENGINEERS OFFICE	LS	1	60,000.00	60,000.00	60,000.00	60,000.00
147	066610	PARTNERING	LS	1	15,800.00	15,800.00	2,500.00	2,500.00
148	070010	PROGRESS SCHEDULE (CRITICAL PATH)	LS	1	15,000.00	15,000.00	15,000.00	15,000.00
149	070030	LEAD COMPLIANCE PLAN	LS	1	1,500.00	1,500.00	2,500.00	2,500.00
150	071321	TEMPORARY FENCE (TYPE CL-6)	LF	908	16.50	14,982.00	6.00	5,448.00
151	071325	TEMPORARY FENCE (TYPE ESA)	LF	2,770	4.00	11,080.00	6.00	16,620.00
152	074016	CONSTRUCTION SITE MANAGEMENT	LS	1	62,900.00	62,900.00	200,000.00	200,000.00
153	120090	CONSTRUCTION AREA SIGNS	LS	1	800.00	800.00	25,000.00	25,000.00
154	120100	TRAFFIC CONTROL SYSTEM	LS	1	43,300.00	43,300.00	25,000.00	25,000.00
155	120165	CHANNELIZER (SURFACE MOUNTED)	EA	17	25.00	425.00	50.00	850.00
156	130300	PREPARE STORM WATER POLLUTION PREVENTION PLAN	LS	1	30,000.00	30,000.00	30,000.00	30,000.00
157	150606	REMOVE FENCE (TYPE BW)	LF	1,197	3.00	3,591.00	4.00	4,788.00
158	150608	REMOVE CHAIN LINK FENCE	LF	3,179	4.00	12,716.00	4.00	12,716.00
159	150608A	REMOVE WROUGHT IRON FENCE	LF	185	10.00	1,850.00	10.00	1,850.00
160	000003	REMOVE CHAIN LINK FENCE (SLATTED)	LF	285	7.00	1,995.00	6.00	1,710.00
161	150662	REMOVE METAL BEAM GUARD RAIL	LF	110	18.00	1,980.00	35.00	3,850.00
162	150711	REMOVE PAINTED TRAFFIC STRIPE	LF	7,913	1.50	11,869.50	0.60	4,747.80
163	150712	REMOVE PAINTED PAVEMENT MARKING	SQFT	1,104	2.50	2,760.00	1.70	1,876.80
164	150742	REMOVE ROADSIDE SIGN	EA	12	134.00	1,608.00	150.00	1,800.00
165	150771	REMOVE ASPHALT CONCRETE DIKE	LF	35	11.00	385.00	5.00	175.00
166	152353	RECONSTRUCT IRRIGATION SYSTEM (TROIS VALLEY)	LS	1	5,000.00	5,000.00	8,500.00	8,500.00
167	152390	RELOCATE ROADSIDE SIGN	EA	3	250.00	750.00	250.00	750.00
168	153103	COLD PLANE AND ASPHALT CONCRETE PAVEMENT	SQYD	632	10.00	6,320.00	8.00	5,056.00
169	153130	REMOVE CONCRETE CURB	LF	77	8.00	616.00	10.00	770.00

Riverside County Transportation Department
Summary of Bids
Advertised: June 2, 2015 (Agenda Item: 3-28)
Addenda: 1 (6/25/2015), 2 (7/09/2015), 3 (7/16/2015), 4 (7/24/2015), 5 (7/29/15), 6 (8/6/2015)
Bids Open: 2 pm Date: Wednesday, August 12, 2015

PROJECT: Clinton Keith Road Construction Project - Phase 2
From Whitewood Road to Leon Road
In the City of Murrieta and French Valley Area
Project No. B2-04722

ALTERNATE BID SCHEDULE 2: CLINTON KEITH ROAD, 4-LANE OPTION

					6 Pulice Construction, Inc. San Diego, CA 92108		7 Riverside Construction Co., Inc. Riverside, CA 92502	
ITEM NO.	ITEM CODE	CONTRACT ITEM	UNITS	QUANTITY	BID UNIT PRICE	BID ESTIMATE	BID UNIT PRICE	BID ESTIMATE
170	153121	REMOVE CONCRETE (CURB AND GUTTER)	LF	348	6.00	2,088.00	10.00	3,480.00
171	153218	REMOVE CONCRETE SIDEWALK	SQFT	1,534	6.00	9,204.00	1.00	1,534.00
172	153242A	REMOVE CONCRETE (CURB RAMP)	EA	1	550.00	550.00	1,500.00	1,500.00
173	160101	CLEARING AND GRUBBING	LS	1	250,000.00	250,000.00	250,000.00	250,000.00
174	170101	DEVELOP WATER SUPPLY	LS	1	31,900.00	31,900.00	50,000.00	50,000.00
175	(F) 190101	ROADWAY EXCAVATION	CY	429,067	10.00	4,290,670.00	10.50	4,505,203.50
176	190160	ROCK EXCAVATION	CY	70,000	5.00	350,000.00	4.00	280,000.00
177	(F) 192003	STRUCTURE EXCAVATION (BRIDGE)	CY	954	17.00	16,218.00	30.00	28,620.00
178	(F) 192037	STRUCTURE EXCAVATION (RETAINING WALL)	CY	7,991	13.00	103,883.00	40.00	319,640.00
179	(F) 193003	STRUCTURE BACKFILL (BRIDGE)	CY	585	87.00	50,895.00	150.00	87,750.00
180	(F) 193013	STRUCTURE BACKFILL (RETAINING WALL)	CY	6,548	38.00	248,824.00	20.00	130,960.00
181	(F) 193031	PERVIOUS BACKFILL (RETAINING WALL)	CY	341	67.00	22,847.00	125.00	42,625.00
182	198205A	SUBGRADE ENHANCEMENT GEOTEXTILE (MULTI-AXIAL)	SQYD	72,678	5.00	363,390.00	5.00	363,390.00
183	201600A	CONCRETE PAVER (TURFSTONE)	SQFT	1,800	9.00	16,200.00	7.50	13,500.00
184	203031	EROSION CONTROL (TYPE D)	SQFT	22,486	0.15	3,372.90	0.15	3,372.90
185	204099	PLANT ESTABLISHMENT WORK	LS	1	5,000.00	5,000.00	50,000.00	50,000.00
186	210250	EROSION CONTROL (BONDED FIBER MATRIX WITH SEEDS)	SQFT	996,422	0.20	199,284.40	0.17	169,391.74
187	210350	FIBER ROLLS	LF	73,420	2.50	183,550.00	3.00	220,260.00
188	210430B	HYDROSEED (WILDLIFE OVERCROSSING)	SQFT	137,692	0.50	68,846.00	0.30	41,307.60
189	210430C	HYDROSEED (RIPARIAN AREA)	SQFT	25,102	0.15	3,765.30	0.15	3,765.30
190	220101	FINISHING ROADWAY	LS	1	25,500.00	25,500.00	50,000.00	50,000.00
191	260203	CLASS 2 AGGREGATE BASE	CY	19,701	28.00	551,628.00	28.00	551,628.00
192	270014	CEMENT TREATED BASE (PLANT-MIXED, CLASS A) [BUS TURNOUT]	CY	143	140.00	20,020.00	225.00	32,175.00
193	390129	HOT MIX ASPHALT (TYPE C)	TON	14,812	57.00	844,284.00	58.00	859,096.00
194	390132	HOT MIX ASPHALT (TYPE A)	TON	9,900	64.00	633,600.00	65.00	643,500.00
195	405030	PORTLAND CEMENT CONCRETE [BUS TURNOUT]	CY	204	275.00	56,100.00	175.00	35,700.00
196	490603	24" CAST-IN-DRILLED-HOLE CONCRETE PILING	LF	3,621	264.00	955,944.00	95.00	343,995.00
197	490617	90" CAST-IN-DRILLED-HOLE CONCRETE PILING	LF	374	4,115.00	1,539,010.00	2,900.00	1,084,600.00
198	500001	PRESTRESSING CAST-IN-PLACE CONCRETE	LS	1	198,600.00	198,600.00	200,000.00	200,000.00
199	(F) 510051	STRUCTURAL CONCRETE, BRIDGE FOOTING	CY	313	280.00	87,640.00	400.00	125,200.00
200	(F) 510053	STRUCTURAL CONCRETE, BRIDGE	CY	4,342	637.00	2,765,854.00	975.00	4,233,450.00
201	(F) 510060	STRUCTURAL CONCRETE (RETAINING WALL)	CY	1,437	430.00	617,910.00	400.00	574,800.00
202	(F) 510086	STRUCTURAL CONCRETE, APPROACH SLAB (TYPE N)	CY	293	370.00	108,410.00	585.00	171,405.00
203	(F) 510502	MINOR CONCRETE (MINOR STRUCTURE)	CY	236	1,500.00	354,000.00	2,000.00	472,000.00
204	510502A	MINOR CONCRETE (RETAINING WALL)	CY	26	500.00	13,000.00	350.00	9,100.00
205	(F) 510526	MINOR CONCRETE (BACKFILL)	CY	9	196.00	1,764.00	175.00	1,575.00
206	(F) 511035	FRACTURED BASALT TEXTURE	SQFT	11,433	8.00	91,464.00	8.00	91,464.00

Riverside County Transportation Department
Summary of Bids
Advertised: June 2, 2015 (Agenda Item: 3-28)
Addenda: 1 (6/25/2015), 2 (7/09/2015), 3 (7/16/2015), 4 (7/24/2015), 5 (7/29/15), 6 (8/6/2015)
Bids Open: 2 pm Date: Wednesday, August 12, 2015

PROJECT: Clinton Keith Road Construction Project - Phase 2
From Whitewood Road to Leon Road
In the City of Murrieta and French Valley Area
Project No. B2-04722

ALTERNATE BID SCHEDULE 2: CLINTON KEITH ROAD, 4-LANE OPTION

					6 Pulice Construction, Inc. San Diego, CA 92108		7 Riverside Construction Co., Inc. Riverside, CA 92502	
ITEM NO.	ITEM CODE	CONTRACT ITEM	UNITS	QUANTITY	BID UNIT PRICE	BID ESTIMATE	BID UNIT PRICE	BID ESTIMATE
207	519092	JOINT SEAL ASSEMBLY (MR=2 1/2")	LF	273	350.00	95,550.00	285.00	77,805.00
208	(F) 519200A	WILDLIFE OVERCROSSING AND RETAINING WALL SYSTEM	LS	1	2,700,000.00	2,700,000.00	2,850,000.00	2,850,000.00
209	519205A	WILDLIFE UNDERCROSSING SKYLIGHT	EA	6	9,400.00	56,400.00	4,000.00	24,000.00
210	(F) 520102	BAR REINFORCING STEEL (BRIDGE)	LB	1,233,974	0.90	1,110,576.60	0.85	1,048,877.90
211	(F) 520103	BAR REINFORCING STEEL (RETAINING WALL)	LB	161,977	1.00	161,977.00	1.00	161,977.00
212	560252	FURNISH SINGLE SHEET ALUMINUM SIGN (0.80" - FRAMED)	SQFT	377	19.00	7,163.00	20.00	7,540.00
213	566011	ROADSIDE SIGN - ONE POST	EA	69	345.00	23,805.00	200.00	13,800.00
214	586001	INSTALL SIGN (STRAP AND SADDLE BRACKET METHOD)	EA	3	125.00	375.00	175.00	525.00
215	598001	ANTI-GRAFFITI COATING	SQFT	11,433	2.00	22,866.00	1.00	11,433.00
216	641125	36" PLASTIC PIPE	LF	428	89.00	38,092.00	185.00	79,180.00
217	650411	18" REINFORCED CONCRETE PIPE (CLASS IV)	LF	1,088	87.00	94,656.00	125.00	136,000.00
218	650416	24" REINFORCED CONCRETE PIPE (CLASS IV)	LF	4,566	93.00	424,638.00	95.00	433,770.00
219	650420	30" REINFORCED CONCRETE PIPE (CLASS IV)	LF	1,103	125.00	137,875.00	120.00	132,360.00
220	650424	36" REINFORCED CONCRETE PIPE (CLASS IV)	LF	1,958	192.00	375,936.00	145.00	283,910.00
221	650440	60" REINFORCED CONCRETE PIPE (CLASS IV)	LF	534	360.00	192,240.00	300.00	160,200.00
222	650480A	36" WILDLIFE CULVERT	LF	415	195.00	80,925.00	190.00	78,850.00
223	650432	48" REINFORCED CONCRETE PIPE (CLASS IV)	LF	234	256.00	59,904.00	250.00	58,500.00
224	665117	18" BITUMINOUS COATED STEEL PIPE (0.079" THICK)	LF	305	90.00	27,450.00	75.00	22,875.00
225	665136	36" BITUMINOUS COATED STEEL PIPE (0.079" THICK)	LF	134	240.00	32,160.00	100.00	13,400.00
226	665137	36" BITUMINOUS COATED STEEL PIPE RISER (0.109" THICK)	LF	24	610.00	14,640.00	650.00	15,600.00
226.A	692007	18" ENTRANCE TAPER	EA	5	1,500.00	7,500.00	7,500.00	37,500.00
227	703233	GRATED LINE DRAIN	LF	79	98.00	7,742.00	80.00	6,320.00
228	705011	18" STEEL FLARED END SECTION	EA	5	500.00	2,500.00	750.00	3,750.00
229	705048	36" STEEL FLARED END SECTION	EA	1	850.00	850.00	1,000.00	1,000.00
230	721015	ROCK SLOPE PROTECTION (LIGHT, METHOD B)	CY	257	58.00	14,906.00	48.00	12,336.00
231	721017	ROCK SLOPE PROTECTION (FACING, METHOD B)	CY	4,866	44.00	214,104.00	48.00	233,568.00
232	(F) 721030	ROCK SLOPE PROTECTION (1/2 TON, METHOD B)	CY	117	80.00	9,360.00	48.00	5,616.00
233	729010	ROCK SLOPE PROTECTION FABRIC	SQYD	10,219	3.00	30,657.00	5.00	51,095.00
234	727901	MINOR CONCRETE (DITCH LINING)	CY	9	500.00	4,500.00	500.00	4,500.00
234.A	731511	MINOR CONCRETE (ISLAND PAVING)	CY	58	455.00	26,390.00	350.00	20,300.00
234.B	000003	MINOR CONCRETE (PEDESTRIAN GUARD)	LF	81	175.00	14,175.00	350.00	28,350.00
235	731516	MINOR CONCRETE (DRIVEWAY)	CY	17	291.00	4,947.00	650.00	11,050.00
236	731521	MINOR CONCRETE (SIDEWALK)	CY	853	291.00	248,223.00	225.00	191,925.00
237	(F) 750001	MISCELLANEOUS IRON AND STEEL	LB	3,433	6.00	20,598.00	3.00	10,299.00
238	(F) 750501	MISCELLANEOUS METAL (BRIDGE)	LB	38,307	10.00	383,070.00	5.00	191,535.00
239	800000A	ONE WAY ACCESS OPENING	EA	9	1,000.00	9,000.00	5,000.00	45,000.00
240	800300	WIRE MESH FENCE (3/8"x3/8" MESH)	LF	9,265	41.00	379,865.00	40.00	370,600.00

Riverside County Transportation Department
Summary of Bids
Advertised: June 2, 2015 (Agenda Item: 3-28)
Addenda: 1 (6/25/2015), 2 (7/09/2015), 3 (7/16/2015), 4 (7/24/2015), 5 (7/29/15), 6 (8/6/2015)
Bids Open: 2 pm Date: Wednesday, August 12, 2015

PROJECT: Clinton Keith Road Construction Project - Phase 2
From Whitewood Road to Leon Road
In the City of Murrieta and French Valley Area
Project No. B2-04722

ALTERNATE BID SCHEDULE 2: CLINTON KEITH ROAD, 4-LANE OPTION

					6 Pulice Construction, Inc. San Diego, CA 92108		7 Riverside Construction Co., Inc. Riverside, CA 92502	
ITEM NO.	ITEM CODE	CONTRACT ITEM	UNITS	QUANTITY	BID UNIT PRICE	BID ESTIMATE	BID UNIT PRICE	BID ESTIMATE
241	800360	CHAIN LINK FENCE (TYPE CL-6)	LF	1,775	16.50	29,287.50	15.00	26,625.00
242	800360A	FENCE (TYPE BW)	LF	870	9.50	8,265.00	10.00	8,700.00
243	800365	CHAIN LINK FENCE (TYPE CL-6,SLATTED)	LF	290	35.00	10,150.00	35.00	10,150.00
244	801100	WIRE MESH GATE (3/8"x3/8" MESH)	EA	4	1,300.00	5,200.00	1,300.00	5,200.00
245	801365A	TUBULAR STEEL GATE	EA	4	4,000.00	16,000.00	4,000.00	16,000.00
246	802620	16' CHAIN LINK GATE (TYPE CL-6)	EA	2	1,750.00	3,500.00	1,750.00	3,500.00
247	000003	WROUGHT IRON FENCE	LF	205	64.00	13,120.00	65.00	13,325.00
248	(F) 833000	METAL RAILING	LF	840	86.00	72,240.00	85.00	71,400.00
249	833020	CHAIN LINK RAILING	LF	415	41.00	17,015.00	35.00	14,525.00
250	839521	CABLE RAILING	LF	302	35.50	10,721.00	35.00	10,570.00
251	839601	CRASH CUSHION (TYPE CAT)	EA	2	4,320.00	8,640.00	4,500.00	9,000.00
252	839602	CRASH CUSHION (TYPE CAT BACKUP)	EA	2	4,320.00	8,640.00	4,500.00	9,000.00
253	839701	CONCRETE BARRIER (TYPE 60)	LF	4,280	62.00	265,360.00	40.00	171,200.00
254	(F) 839702	CONCRETE BARRIER (TYPE 60A)	LF	840	77.00	64,680.00	40.00	33,600.00
255	839703	CONCRETE BARRIER (TYPE 60C)	LF	34	383.00	13,022.00	200.00	6,800.00
256	839705	CONCRETE BARRIER (TYPE 60E MODIFIED)	LF	220	113.00	24,860.00	75.00	16,500.00
257	839726	CONCRETE BARRIER (TYPE 736A)	LF	415	99.00	41,085.00	150.00	62,250.00
258	(F) 839727	CONCRETE BARRIER (TYPE 736 MODIFIED)	LF	840	99.00	83,160.00	165.00	138,600.00
259	840504	4" THERMOPLASTIC TRAFFIC STRIPE	LF	72,085	0.40	28,834.00	0.35	25,229.75
260	840505	6" THERMOPLASTIC TRAFFIC STRIPE	LF	413	1.00	413.00	1.00	413.00
261	840506	8" THERMOPLASTIC TRAFFIC STRIPE	LF	5,103	1.00	5,103.00	1.00	5,103.00
262	840519	THERMOPLASTIC CROSSWALK AND PAVEMENT MARKING	SQFT	2,885	3.30	9,520.50	3.50	10,097.50
263	850111	PAVEMENT MARKER (RETROREFLECTIVE)	EA	1,680	3.50	5,880.00	3.50	5,880.00
264	860251	SIGNAL AND LIGHTING (CLINTON KEITH/MENIFEE)	LS	1	245,000.00	245,000.00	250,000.00	250,000.00
265	860251	SIGNAL AND LIGHTING (CLINTON KEITH/ TROIS VALLEY)	LS	1	246,000.00	246,000.00	250,000.00	250,000.00
266	860556	SOLAR LIGHTING ON WILDLIFE CROSSING (8 LIGHTS)	LS	1	82,000.00	82,000.00	80,000.00	80,000.00
267	860557	SOLAR LIGHTING ON WARM SPRINGS CREEK BRIDGE (4 LIGHTS)	LS	1	85,000.00	85,000.00	85,000.00	85,000.00
268	(F) 860704A	2" INTERCONNECT CONDUIT AND TRACER WIRE	LF	2,800	10.00	28,000.00	10.00	28,000.00
269	861497	MODIFY SIGNAL AND LIGHTING (CLINTON KEITH/WHITEWOOD)	LS	1	92,000.00	92,000.00	90,000.00	90,000.00
270	(F) 867014	12 SINGLE MODE FIBER OPTIC CABLE	LF	2,800	1.00	2,800.00	1.00	2,800.00
271	869039A	NO.6 PULL BOX	EA	11	400.00	4,400.00	400.00	4,400.00
272	019901	MOBILIZATION,DEMOBILZATION, AND FINAL CLEAN UP	LS	1	1,761,000.00	1,761,000.00	1,550,000.00	1,550,000.00
272.A	20052A	TREE TOPPING	LS	1	16.00	16.00	35,000.00	35,000.00
272.B	000003	DRAINAGE INLET FILTRATION SYSTEM (KRISTAR FLOGARD)	EA	2	5,900.00	11,800.00	4,500.00	9,000.00
272.C	000003	DRAINAGE INLET FILTRATION SYSTEM (CLEARWATER)	EA	1	5,600.00	5,600.00	4,500.00	4,500.00
		ALTERNATE BID SCHEDULE 2, 4-LANE OPTION, TOTAL ITEMS 133 - 272.C				**26,310,315.20**		**26,918,229.79**

Riverside County Transportation Department
Summary of Bids

Advertised: June 2, 2015 (Agenda Item: 3-28)
Addenda: 1 (6/25/2015), 2 (7/09/2015), 3 (7/16/2015), 4 (7/24/2015), 5 (7/29/15), 6 (8/6/2015)
Bids Open: 2 pm Date: Wednesday, August 12, 2015

PROJECT: Clinton Keith Road Construction Project - Phase 2
From Whitewood Road to Leon Road
In the City of Murrieta and French Valley Area
Project No. B2-04722

ALTERNATE BID SCHEDULE 3: EASTERN MUNICIPAL WATER DISTRICT					6 Pulice Construction, Inc. San Diego, CA 92108		7 Riverside Construction Co., Inc. Riverside, CA 92502	
ITEM NO.	ITEM CODE	CONTRACT ITEM	UNITS	QUANTITY	BID UNIT PRICE	BID ESTIMATE	BID UNIT PRICE	BID ESTIMATE
273	000003	EMWD WATER LINE THROUGH WARM SPRINGS CREEK	LS	1	138,000.00	138,000.00	170,000.00	170,000.00
		ALTERNATE BID SCHEDULE 3 TOTAL ITEM 273				**138,000.00**		**170,000.00**

ALTERNATE BID SCHEDULE 4: DEMOLISH BUILDINGS					6 Pulice Construction, Inc. San Diego, CA 92108		7 Riverside Construction Co., Inc. Riverside, CA 92502	
ITEM NO.	ITEM CODE	CONTRACT ITEM	UNITS	QUANTITY	BID UNIT PRICE	BID ESTIMATE	BID UNIT PRICE	BID ESTIMATE
274	000003	DEMOLISH BUILDINGS	LS	1	23,000.00	23,000.00	35,000.00	35,000.00
		ALTERNATE BID SCHEDULE 4 TOTAL ITEM 274				**23,000.00**		**35,000.00**

	6 Pulice Construction, Inc. San Diego, CA 92108	7 Riverside Construction Co., Inc. Riverside, CA 92502
ALTERNATE BID SCHEDULES 1, 2, 3, AND 4 TOTAL ITEMS 1 - 274	**51,020,774.90**	**51,451,676.17**

Riverside County Transportation Department
Summary of Bids
Advertised: June 2, 2015 (Agenda Item: 3-28)
Addenda: 1 (6/25/2015), 2 (7/09/2015), 3 (7/16/2015), 4 (7/24/2015), 5 (7/29/15), 6 (8/6/2015)
Bids Open: 2 pm Date: Wednesday, August 12, 2015

PROJECT: Clinton Keith Road Construction Project - Phase 2
From Whitewood Road to Leon Road
In the City of Murrieta and French Valley Area
Project No. B2-04722

ALTERNATE BID SCHEDULE 1: CLINTON KEITH ROAD, 2-LANE OPTION

					8		9	
					MCM Construction, Inc. Norht Highlands, CA 95660		OHL USA Irvine, CA 92614	
ITEM NO.	ITEM CODE	CONTRACT ITEM	UNITS	QUANTITY	BID UNIT PRICE	BID ESTIMATE	BID UNIT PRICE	BID ESTIMATE
1	016101	OBTAIN ENCROACHMENT PERMIT	FA	1	5,000.00	5,000.00	5,000.00	5,000.00
2	017101	MANHOLE (RCFC & WCDS MH 251)	EA	15	3,500.00	52,500.00	5,000.00	75,000.00
3	017103	MANHOLE (RCFC & WCDS MH 252)	EA	8	3,800.00	30,400.00	5,340.00	42,720.00
4	017105	JUNCTION STRUCTURE (RCFC & WCDS JS 227)	EA	17	1,500.00	25,500.00	2,090.00	35,530.00
5	017114	TRANSITION STRUCTURE (RCFC & WCDS TS 303)	EA	1	2,000.00	2,000.00	3,000.00	3,000.00
6	017305	MINOR CONCRETE (TYPE A-8 CURB) (CRS 201)	LF	9,141	13.00	118,833.00	18.00	164,538.00
7	017306	MINOR CONCRETE (CURB RAMP) (CRS 403)	EA	5	3,000.00	15,000.00	5,130.00	25,650.00
8	017307	MINOR CONCRETE (TYPE "C" CURB) (CRS 202)(MOD)	LF	257	15.00	3,855.00	33.00	8,481.00
9	017309	MINOR CONCRETE (TYPE "D" CURB) (CRS 204)	LF	4,008	10.00	40,080.00	14.50	58,116.00
10	019902	COURSE OF CONSTRUCTION INSURANCE	LS	1	65,000.00	65,000.00	65,000.00	65,000.00
11	000001	ITEM DELETED BY ADDENDUM No. 5	---	---	---	---	---	---
12	066102	DUST ABATEMENT	LS	1	50,000.00	50,000.00	65,000.00	65,000.00
13	066105	RESIDENT ENGINEERS OFFICE	LS	1	60,000.00	60,000.00	60,000.00	60,000.00
14	066610	PARTNERING	LS	1	5,000.00	5,000.00	12,000.00	12,000.00
15	070010	PROGRESS SCHEDULE (CRITICAL PATH)	LS	1	15,000.00	15,000.00	15,000.00	15,000.00
16	070030	LEAD COMPLIANCE PLAN	LS	1	1,000.00	1,000.00	2,500.00	2,500.00
17	071321	TEMPORARY FENCE (TYPE CL-6)	LF	908	15.00	13,620.00	20.00	18,160.00
18	071325	TEMPORARY FENCE (TYPE ESA)	LF	2,770	5.00	13,850.00	12.00	33,240.00
19	074016	CONSTRUCTION SITE MANAGEMENT	LS	1	150,000.00	150,000.00	35,000.00	35,000.00
20	120090	CONSTRUCTION AREA SIGNS	LS	1	10,000.00	10,000.00	23,000.00	23,000.00
21	120100	TRAFFIC CONTROL SYSTEM	LS	1	20,000.00	20,000.00	38,000.00	38,000.00
22	120165	CHANNELIZER (SURFACE MOUNTED)	EA	17	35.00	595.00	30.00	510.00
23	130300	PREPARE STORM WATER POLLUTION PREVENTION PLAN	LS	1	30,000.00	30,000.00	30,000.00	30,000.00
24	150606	REMOVE FENCE (TYPE BW)	LF	1,197	3.50	4,189.50	3.50	4,189.50
25	150608	REMOVE CHAIN LINK FENCE	LF	3,179	2.00	6,358.00	6.00	19,074.00
26	000003	REMOVE CHAIN LNK FENCE (SLATTED)	LF	285	2.50	712.50	7.00	1,995.00
27	150662	REMOVE METAL BEAM GUARD RAIL	LF	110	30.00	3,300.00	27.00	2,970.00
28	150711	REMOVE PAINTED TRAFFIC STRIPE	LF	7,913	0.60	4,747.80	0.60	4,747.80
29	150712	REMOVE PAINTED PAVEMENT MARKING	SQFT	1,104	1.70	1,876.80	0.60	662.40
30	150742	REMOVE ROADSIDE SIGN	EA	13	100.00	1,300.00	110.00	1,430.00
31	150771	REMOVE ASPHALT CONCRETE DIKE	LF	35	5.00	175.00	26.00	910.00
32	152390	RELOCATE ROADSIDE SIGN	EA	4	250.00	1,000.00	288.00	1,152.00
33	153103	COLD PLANE AND ASPHALT CONCRETE PAVEMENT	SQYD	632	11.00	6,952.00	10.00	6,320.00
34	153130	REMOVE CONCRETE CURB	LF	77	20.00	1,540.00	8.00	616.00
35	153121	REMOVE CONCRETE (CURB AND GUTTER)	LF	348	9.00	3,132.00	10.00	3,480.00
36	153218	REMOVE CONCRETE SIDEWALK	SQFT	1,534	2.00	3,068.00	2.00	3,068.00
37	153242A	REMOVE CONCRETE (CURB RAMP)	EA	1	700.00	700.00	720.00	720.00

Riverside County Transportation Department
Summary of Bids
Advertised: June 2, 2015 (Agenda Item: 3-28)
Addenda: 1 (6/25/2015), 2 (7/09/2015), 3 (7/16/2015), 4 (7/24/2015), 5 (7/29/15), 6 (8/6/2015)
Bids Open: 2 pm Date: Wednesday, August 12, 2015

PROJECT: Clinton Keith Road Construction Project - Phase 2
From Whitewood Road to Leon Road
In the City of Murrieta and French Valley Area
Project No. B2-04722

ALTERNATE BID SCHEDULE 1: CLINTON KEITH ROAD, 2-LANE OPTION

					8		9	
					MCM Construction, Inc. Norht Highlands, CA 95660		OHL USA Irvine, CA 92614	
ITEM NO.	ITEM CODE	CONTRACT ITEM	UNITS	QUANTITY	BID UNIT PRICE	BID ESTIMATE	BID UNIT PRICE	BID ESTIMATE
38	160101	CLEARING AND GRUBBING	LS	1	250,000.00	250,000.00	250,000.00	250,000.00
39	170101	DEVELOP WATER SUPPLY	LS	1	50,000.00	50,000.00	50,000.00	50,000.00
40	(F) 190101	ROADWAY EXCAVATION	CY	420,501	7.50	3,153,757.50	9.00	3,784,509.00
41	190160	ROCK EXCAVATION	CY	70,000	5.00	350,000.00	6.00	420,000.00
42	(F) 192003	STRUCTURE EXCAVATION (BRIDGE)	CY	954	100.00	95,400.00	66.00	62,964.00
43	(F) 192037	STRUCTURE EXCAVATION (RETAINING WALL)	CY	2,974	40.00	118,960.00	25.00	74,350.00
44	(F) 193003	STRUCTURE BACKFILL (BRIDGE)	CY	585	30.00	17,550.00	90.00	52,650.00
45	(F) 193013	STRUCTURE BACKFILL (RETAINING WALL)	CY	2,432	40.00	97,280.00	15.00	36,480.00
46	(F) 193031	PERVIOUS BACKFILL (RETAINING WALL)	CY	81	100.00	8,100.00	55.00	4,455.00
47	198205A	SUBGRADE ENHANCEMENT GEOTEXTILE (MULTI-AXIAL)	SQYD	52,975	5.30	280,767.50	6.40	339,040.00
48	201600A	CONCRETE PAVER (TURFSTONE)	SQFT	1,800	15.00	27,000.00	29.00	52,200.00
49	203031	EROSION CONTROL (TYPE D)	SQFT	22,486	0.19	4,272.34	0.20	4,497.20
50	204099	PLANT ESTABLISHMENT WORK	LS	1	5,000.00	5,000.00	23,500.00	23,500.00
51	210250	EROSION CONTROL (BONDED FIBER MATRIX WITH SEEDS)	SQFT	1,201,338	0.17	204,227.46	0.22	264,294.36
52	210350	FIBER ROLLS	LF	69,185	2.00	138,370.00	3.70	255,984.50
53	210430A	HYDROSEED (WILDLIFE OVERCROSSING)	SQFT	137,692	0.27	37,176.84	0.35	48,192.20
54	210430B	HYDROSEED (RIPARIAN AREA)	SQFT	25,102	0.30	7,530.60	0.24	6,024.48
55	220101	FINISHING ROADWAY	LS	1	150,000.00	150,000.00	330,000.00	330,000.00
56	260203	CLASS 2 AGGREGATE BASE	CY	14,127	35.00	494,445.00	23.00	324,921.00
57	270014	CEMENT TREATED BASE (PLANT-MIXED, CLASS A) [BUS TURNOUT]	CY	86	200.00	17,200.00	120.00	10,320.00
58	390129	HOT MIX ASPHALT (TYPE C)	TON	10,821	63.00	681,723.00	67.00	725,007.00
59	390132	HOT MIX ASPHALT (TYPE A)	TON	7,240	63.00	456,120.00	75.00	543,000.00
60	394075	PLACE HOT MIX ASPHALT DIKE (TYPE D)	LF	1,414	3.00	4,242.00	5.50	7,777.00
61	405030	PORTLAND CEMENT CONCRETE [BUS TURNOUT]	CY	122	280.00	34,160.00	285.00	34,770.00
62	490603	24" CAST-IN-DRILLED-HOLE CONCRETE PILING	LF	3,621	200.00	724,200.00	250.00	905,250.00
63	490617	90" CAST-IN-DRILLED-HOLE CONCRETE PILING	LF	374	3,100.00	1,159,400.00	2,630.00	983,620.00
64	500001	PRESTRESSING CAST-IN-PLACE CONCRETE	LS	1	200,000.00	200,000.00	235,000.00	235,000.00
65	(F) 510051	STRUCTURAL CONCRETE, BRIDGE FOOTING	CY	313	500.00	156,500.00	315.00	98,595.00
66	(F) 510053	STRUCTURAL CONCRETE, BRIDGE	CY	4,342	1,000.00	4,342,000.00	755.00	3,278,210.00
67	(F) 510060	STRUCTURAL CONCRETE (RETAINING WALL)	CY	620	400.00	248,000.00	345.00	213,900.00
68	(F) 510086	STRUCTURAL CONCRETE, APPROACH SLAB (TYPE N)	CY	293	650.00	190,450.00	550.00	161,150.00
69	(F) 510502	MINOR CONCRETE (MINOR STRUCTURE)	CY	249	1,000.00	249,000.00	1,180.00	293,820.00
70	510502A	MINOR CONCRETE (RETAINING WALL)	CY	11	675.00	7,425.00	650.00	7,150.00
71	(F) 510526	MINOR CONCRETE (BACKFILL)	CY	9	150.00	1,350.00	150.00	1,350.00
72	(F) 511035	FRACTURED BASALT TEXTURE	SQFT	3,582	14.00	50,148.00	35.00	125,370.00
73	519092	JOINT SEAL ASSEMBLY (MR=2 1/2")	LF	273	180.00	49,140.00	275.00	75,075.00
74	(F) 519200A	WILDLIFE OVERCROSSING AND RETAINING WALL SYSTEM	LS	1	2,988,104.00	2,988,104.00	2,800,000.00	2,800,000.00

Riverside County Transportation Department
Summary of Bids
Advertised: June 2, 2015 (Agenda Item: 3-28)
Addenda: 1 (6/25/2015), 2 (7/09/2015), 3 (7/16/2015), 4 (7/24/2015), 5 (7/29/15), 6 (8/6/2015)
Bids Open: 2 pm Date: Wednesday, August 12, 2015

PROJECT: Clinton Keith Road Construction Project - Phase 2
From Whitewood Road to Leon Road
In the City of Murrieta and French Valley Area
Project No. B2-04722

ALTERNATE BID SCHEDULE 1: CLINTON KEITH ROAD, 2-LANE OPTION

					8		9	
					MCM Construction, Inc. Norht Highlands, CA 95660		OHL USA Irvine, CA 92614	
ITEM NO.	ITEM CODE	CONTRACT ITEM	UNITS	QUANTITY	BID UNIT PRICE	BID ESTIMATE	BID UNIT PRICE	BID ESTIMATE
75	519205A	WILDLIFE UNDERCROSSING SKYLIGHT	EA	6	6,000.00	36,000.00	2,750.00	16,500.00
76	(F) 520102	BAR REINFORCING STEEL (BRIDGE)	LB	1,233,974	0.90	1,110,576.60	1.00	1,233,974.00
77	(F) 520103	BAR REINFORCING STEEL (RETAINING WALL)	LB	59,816	1.50	89,724.00	2.00	119,632.00
78	560252	FURNISH SINGLE SHEET ALUMINUM SIGN (0.80" - FRAMED)	SQFT	397	19.00	7,543.00	35.00	13,895.00
79	566011	ROADSIDE SIGN - ONE POST	EA	66	150.00	9,900.00	220.00	14,520.00
80	568001	INSTALL SIGN (STRAP AND SADDLE BRACKET METHOD)	EA	7	150.00	1,050.00	88.00	616.00
81	598001	ANTI-GRAFFITI COATING	SQFT	3,582	1.00	3,582.00	1.25	4,477.50
82	641125	36" PLASTIC PIPE	LF	428	75.00	32,100.00	110.00	47,080.00
83	650411	18" REINFORCED CONCRETE PIPE (CLASS IV)	LF	592	85.00	50,320.00	110.00	65,120.00
84	650416	24" REINFORCED CONCRETE PIPE (CLASS IV)	LF	4,510	108.00	487,080.00	91.00	410,410.00
85	650420	30" REINFORCED CONCRETE PIPE (CLASS IV)	LF	1,095	138.00	151,110.00	135.00	147,825.00
86	650424	36" REINFORCED CONCRETE PIPE (CLASS IV)	LF	1,958	159.00	311,322.00	134.00	262,372.00
87	650440	60" REINFORCED CONCRETE PIPE (CLASS IV)	LF	534	245.00	130,830.00	279.00	148,986.00
88	650480A	36" WILDLIFE CULVERT	LF	415	242.00	100,430.00	79.00	32,785.00
89	650432	48" REINFORCED CONCRETE PIPE (CLASS IV)	LF	234	244.00	57,096.00	229.00	53,586.00
90	665117	18" BITUMINOUS COATED STEEL PIPE (0.079" THICK)	LF	151	92.00	13,892.00	100.00	15,100.00
91	665136	36" BITUMINOUS COATED STEEL PIPE (0.079" THICK)	LF	134	165.00	22,110.00	117.00	15,678.00
92	665137	36" BITUMINOUS COATED STEEL PIPE RISER (0.109" THICK)	LF	24	437.00	10,488.00	542.00	13,008.00
92.A	692007	18" ENTRANCE TAPER	EA	2	2,800.00	5,600.00	577.00	1,154.00
93	703233	GRATED LINE DRAIN	LF	1,738	115.00	199,870.00	88.00	152,944.00
94	705011	18" STEEL FLARED END SECTION	EA	2	695.00	1,390.00	658.00	1,316.00
95	705048	36" STEEL FLARED END SECTION	EA	1	1,145.00	1,145.00	1,000.00	1,000.00
96	000001	ITEM DELETED BY ADDENDUM No. 1	---	---	---	---	---	---
97	721015	ROCK SLOPE PROTECTION (LIGHT, METHOD B)	CY	257	45.00	11,565.00	51.00	13,107.00
98	721017	ROCK SLOPE PROTECTION (FACING, METHOD B)	CY	3,109	45.00	139,905.00	51.00	158,559.00
99	(F) 721030	ROCK SLOPE PROTECTION (1/2 TON, METHOD B)	CY	117	45.00	5,265.00	51.00	5,967.00
100	729010	ROCK SLOPE PROTECTION FABRIC	SQYD	7,115	4.00	28,460.00	4.60	32,729.00
100.A	731511	MINOR CONCRETE (ISLAND PAVING)	CY	58	400.00	23,200.00	1,000.00	58,000.00
100.B	000003	MINOR CONCRETE (PEDESTRIAN GUARD)	LF	81	100.00	8,100.00	200.00	16,200.00
101	731516	MINOR CONCRETE (DRIVEWAY)	CY	17	210.00	3,570.00	650.00	11,050.00
102	731521	MINOR CONCRETE (SIDEWALK)	CY	765	250.00	191,250.00	365.00	279,225.00
103	(F) 750001	MISCELLANEOUS IRON AND STEEL	LB	11,274	1.35	15,219.90	3.50	39,459.00
104	(F) 750501	MISCELLANEOUS METAL (BRIDGE)	LB	38,307	10.00	383,070.00	7.50	287,302.50
105	800000A	ONE WAY ACCESS OPENING	EA	9	5,000.00	45,000.00	577.00	5,193.00
106	800300	WIRE MESH FENCE (3/8"x3/8" MESH)	LF	9,265	40.00	370,600.00	47.00	435,455.00
107	800360	CHAIN LINK FENCE (TYPE CL-6)	LF	1,775	16.00	28,400.00	19.00	33,725.00
108	800360A	FENCE (TYPE BW)	LF	870	9.00	7,830.00	11.00	9,570.00

Riverside County Transportation Department
Summary of Bids
Advertised: June 2, 2015 (Agenda Item: 3-28)
Addenda: 1 (6/25/2015), 2 (7/09/2015), 3 (7/16/2015), 4 (7/24/2015), 5 (7/29/15), 6 (8/6/2015)
Bids Open: 2 pm Date: Wednesday, August 12, 2015

PROJECT: Clinton Keith Road Construction Project - Phase 2
From Whitewood Road to Leon Road
In the City of Murrieta and French Valley Area
Project No. B2-04722

ALTERNATE BID SCHEDULE 1: CLINTON KEITH ROAD, 2-LANE OPTION

					8 MCM Construction, Inc. Norht Highlands, CA 95660		9 OHL USA Irvine, CA 92614	
ITEM NO.	ITEM CODE	CONTRACT ITEM	UNITS	QUANTITY	BID UNIT PRICE	BID ESTIMATE	BID UNIT PRICE	BID ESTIMATE
109	800365	CHAIN LINK FENCE (TYPE CL-6,SLATTED)	LF	290	34.00	9,860.00	40.00	11,600.00
110	801100	WIRE MESH GATE (3/8"x3/8" MESH)	EA	6	1,200.00	7,200.00	1,520.00	9,120.00
111	801365A	TUBULAR STEEL GATE	EA	3	4,000.00	12,000.00	5,160.00	15,480.00
112	802620	16' CHAIN LINK GATE (TYPE CL-6)	EA	2	1,600.00	3,200.00	2,050.00	4,100.00
113	(F) 833000	METAL RAILING	LF	840	85.00	71,400.00	100.00	84,000.00
114	839521	CABLE RAILING	LF	302	35.00	10,570.00	41.00	12,382.00
115	839601	CRASH CUSHION (TYPE CAT)	EA	2	4,000.00	8,000.00	5,000.00	10,000.00
116	839602	CRASH CUSHION (TYPE CAT BACKUP)	EA	2	4,000.00	8,000.00	5,000.00	10,000.00
117	839701	CONCRETE BARRIER (TYPE 60)	LF	4,210	70.00	294,700.00	70.00	294,700.00
118	(F) 839702	CONCRETE BARRIER (TYPE 60A)	LF	840	100.00	84,000.00	70.00	58,800.00
119	839703	CONCRETE BARRIER (TYPE 60C)	LF	34	600.00	20,400.00	100.00	3,400.00
120	839705	CONCRETE BARRIER (TYPE 60E MODIFIED)	LF	220	180.00	39,600.00	75.00	16,500.00
121	(F) 839727	CONCRETE BARRIER (TYPE 736 MODIFIED)	LF	840	200.00	168,000.00	90.00	75,600.00
122	840504	4" THERMOPLASTIC TRAFFIC STRIPE	LF	91,938	0.37	34,017.06	0.40	36,775.20
123	840506	8" THERMOPLASTIC TRAFFIC STRIPE	LF	5,961	1.00	5,961.00	1.15	6,855.15
124	840519	THERMOPLASTIC CROSSWALK AND PAVEMENT MARKING	SQFT	2,321	3.30	7,659.30	3.80	8,819.80
125	850111	PAVEMENT MARKER (RETROREFLECTIVE)	EA	1,873	3.50	6,555.50	4.00	7,492.00
126	860251	SIGNAL AND LIGHTING (CLINTON KEITH/ TROIS VALLEY)	LS	1	180,000.00	180,000.00	250,000.00	250,000.00
127	860556	SOLAR LIGHTING ON WILDLIFE CROSSING (8 LIGHTS)	LS	1	35,000.00	35,000.00	50,000.00	50,000.00
128	860557	SOLAR LIGHTING ON WARM SPRINGS CREEK BRIDGE (4 LIGHTS)	LS	1	25,000.00	25,000.00	40,000.00	40,000.00
129	(F) 860704A	2" INTERCONNECT CONDUIT AND TRACER WIRE	LF	2,550	25.00	63,750.00	20.00	51,000.00
130	861497	MODIFY SIGNAL AND LIGHTING (CLINTON KEITH/WHITEWOOD)	LS	1	50,000.00	50,000.00	100,000.00	100,000.00
131	869039A	NO.6 PULL BOX	EA	9	750.00	6,750.00	700.00	6,300.00
132	760090	MOBILIZATION,DEMOBILZATION, AND FINAL CLEAN UP	LS	1	1,591,000.00	1,591,000.00	1,591,000.00	1,591,000.00
132.A	20052A	TREE TOPPING	LS	1	5,000.00	5,000.00	25,000.00	25,000.00
132.B	000003	DRAINAGE INLET FILTRATION SYSTEM (KRISTAR FLOGARD)	EA	1	1,500.00	1,500.00	4,000.00	4,000.00
132.C	000003	DRAINAGE INLET FILTRATION SYSTEM (CLEARWATER)	EA	1	2,000.00	2,000.00	4,000.00	4,000.00
		ALTERNATE BID SCHEDULE 1, 2-LANE OPTION, TOTAL ITEMS 1 - 132.C				**24,661,000.20**		**24,694,649.59**

Riverside County Transportation Department
Summary of Bids
Advertised: June 2, 2015 (Agenda Item: 3-28)
Addenda: 1 (6/25/2015), 2 (7/09/2015), 3 (7/16/2015), 4 (7/24/2015), 5 (7/29/15), 6 (8/6/2015)
Bids Open: 2 pm Date: Wednesday, August 12, 2015

PROJECT: Clinton Keith Road Construction Project - Phase 2
From Whitewood Road to Leon Road
In the City of Murrieta and French Valley Area
Project No. B2-04722

ALTERNATE BID SCHEDULE 2: CLINTON KEITH ROAD, 4-LANE OPTION

					8 MCM Construction, Inc. Norht Highlands, CA 95660		9 OHL USA Irvine, CA 92614	
ITEM NO.	ITEM CODE	CONTRACT ITEM	UNITS	QUANTITY	BID UNIT PRICE	BID ESTIMATE	BID UNIT PRICE	BID ESTIMATE
133	016101	OBTAIN ENCROACHMENT PERMIT	FA	1	5,000.00	5,000.00	5,000.00	5,000.00
134	017101	MANHOLE (RCFC & WCDS MH 251)	EA	11	3,500.00	38,500.00	5,050.00	55,550.00
135	017103	MANHOLE (RCFC & WCDS MH 252)	EA	6	3,800.00	22,800.00	5,340.00	32,040.00
136	017701A	MODIFIED MANHOLE 1	EA	4	4,000.00	16,000.00	5,570.00	22,280.00
137	017701B	MODIFIED MANHOLE 2	EA	2	4,500.00	9,000.00	5,800.00	11,600.00
138	017105	JUNCTION STRUCTURE (RCFC & WCDS JS 227)	EA	17	1,500.00	25,500.00	2,090.00	35,530.00
139	017114	TRANSITION STRUCTURE (RCFC & WCDS TS 303)	EA	1	2,000.00	2,000.00	3,000.00	3,000.00
140	017305	MINOR CONCRETE (TYPE A-8 CURB) (CRS 201)	LF	12,316	12.50	153,950.00	17.00	209,372.00
141	017306	MINOR CONCRETE (CURB RAMP) (CRS 403)	EA	7	2,800.00	19,600.00	5,400.00	37,800.00
142	017309	MINOR CONCRETE (TYPE "D" CURB) (CRS 204)	LF	1,273	11.50	14,639.50	17.00	21,641.00
143	019902	COURSE OF CONSTRUCTION INSURANCE	LS	1	65,000.00	65,000.00	65,000.00	65,000.00
144	000001	ITEM DELETED BY ADDENDUM No. 5	----	----	----	----	----	----
145	066102	DUST ABATEMENT	LS	1	50,000.00	50,000.00	65,000.00	65,000.00
146	066105	RESIDENT ENGINEERS OFFICE	LS	1	60,000.00	60,000.00	60,000.00	60,000.00
147	066610	PARTNERING	LS	1	5,000.00	5,000.00	12,000.00	12,000.00
148	070010	PROGRESS SCHEDULE (CRITICAL PATH)	LS	1	15,000.00	15,000.00	15,000.00	15,000.00
149	070030	LEAD COMPLIANCE PLAN	LS	1	1,000.00	1,000.00	2,500.00	2,500.00
150	071321	TEMPORARY FENCE (TYPE CL-6)	LF	908	15.00	13,620.00	20.00	18,160.00
151	071325	TEMPORARY FENCE (TYPE ESA)	LF	2,770	5.00	13,850.00	12.00	33,240.00
152	074016	CONSTRUCTION SITE MANAGEMENT	LS	1	150,000.00	150,000.00	35,000.00	35,000.00
153	120090	CONSTRUCTION AREA SIGNS	LS	1	10,000.00	10,000.00	25,000.00	25,000.00
154	120100	TRAFFIC CONTROL SYSTEM	LS	1	20,000.00	20,000.00	38,000.00	38,000.00
155	120165	CHANNELIZER (SURFACE MOUNTED)	EA	17	35.00	595.00	25.00	425.00
156	130300	PREPARE STORM WATER POLLUTION PREVENTION PLAN	LS	1	30,000.00	30,000.00	30,000.00	30,000.00
157	150606	REMOVE FENCE (TYPE BW)	LF	1,197	3.50	4,189.50	4.00	4,788.00
158	150608	REMOVE CHAIN LINK FENCE	LF	3,179	2.00	6,358.00	6.00	19,074.00
159	150608A	REMOVE WROUGHT IRON FENCE	LF	185	6.00	1,110.00	12.00	2,220.00
160	000003	REMOVE CHAIN LINK FENCE (SLATTED)	LF	285	2.50	712.50	7.00	1,995.00
161	150662	REMOVE METAL BEAM GUARD RAIL	LF	110	30.00	3,300.00	18.00	1,980.00
162	150711	REMOVE PAINTED TRAFFIC STRIPE	LF	7,913	0.60	4,747.80	0.70	5,539.10
163	150712	REMOVE PAINTED PAVEMENT MARKING	SQFT	1,104	1.70	1,876.80	2.00	2,208.00
164	150742	REMOVE ROADSIDE SIGN	EA	12	100.00	1,200.00	115.00	1,380.00
165	150771	REMOVE ASPHALT CONCRETE DIKE	LF	35	5.00	175.00	17.00	595.00
166	152353	RECONSTRUCT IRRIGATION SYSTEM (TROIS VALLEY)	LS	1	5,000.00	5,000.00	31,000.00	31,000.00
167	152390	RELOCATE ROADSIDE SIGN	EA	3	250.00	750.00	174.00	522.00
168	153103	COLD PLANE AND ASPHALT CONCRETE PAVEMENT	SQYD	632	11.00	6,952.00	11.00	6,952.00
169	153130	REMOVE CONCRETE CURB	LF	77	20.00	1,540.00	9.00	693.00

Riverside County Transportation Department
Summary of Bids
Advertised: June 2, 2015 (Agenda Item: 3-28)
Addenda: 1 (6/25/2015), 2 (7/09/2015), 3 (7/16/2015), 4 (7/24/2015), 5 (7/29/15), 6 (8/6/2015)
Bids Open: 2 pm Date: Wednesday, August 12, 2015

PROJECT: Clinton Keith Road Construction Project - Phase 2
From Whitewood Road to Leon Road
In the City of Murrieta and French Valley Area
Project No. B2-04722

ALTERNATE BID SCHEDULE 2: CLINTON KEITH ROAD, 4-LANE OPTION

					8 MCM Construction, Inc. Norht Highlands, CA 95660		9 OHL USA Irvine, CA 92614	
ITEM NO.	ITEM CODE	CONTRACT ITEM	UNITS	QUANTITY	BID UNIT PRICE	BID ESTIMATE	BID UNIT PRICE	BID ESTIMATE
170	153121	REMOVE CONCRETE (CURB AND GUTTER)	LF	348	9.00	3,132.00	11.00	3,828.00
171	153218	REMOVE CONCRETE SIDEWALK	SQFT	1,534	2.00	3,068.00	2.00	3,068.00
172	153242A	REMOVE CONCRETE (CURB RAMP)	EA	1	700.00	700.00	720.00	720.00
173	160101	CLEARING AND GRUBBING	LS	1	250,000.00	250,000.00	250,000.00	250,000.00
174	170101	DEVELOP WATER SUPPLY	LS	1	50,000.00	50,000.00	50,000.00	50,000.00
175	(F) 190101	ROADWAY EXCAVATION	CY	429,067	7.50	3,218,002.50	9.15	3,925,963.05
176	190160	ROCK EXCAVATION	CY	70,000	5.00	350,000.00	6.00	420,000.00
177	(F) 192003	STRUCTURE EXCAVATION (BRIDGE)	CY	954	100.00	95,400.00	66.00	62,964.00
178	(F) 192037	STRUCTURE EXCAVATION (RETAINING WALL)	CY	7,991	35.00	279,685.00	25.00	199,775.00
179	(F) 193003	STRUCTURE BACKFILL (BRIDGE)	CY	585	30.00	17,550.00	90.00	52,650.00
180	(F) 193013	STRUCTURE BACKFILL (RETAINING WALL)	CY	6,548	35.00	229,180.00	15.00	98,220.00
181	(F) 193031	PERVIOUS BACKFILL (RETAINING WALL)	CY	341	100.00	34,100.00	55.00	18,755.00
182	198205A	SUBGRADE ENHANCEMENT GEOTEXTILE (MULTI-AXIAL)	SQYD	72,678	5.30	385,193.40	6.40	465,139.20
183	201600A	CONCRETE PAVER (TURFSTONE)	SQFT	1,800	15.00	27,000.00	29.00	52,200.00
184	203031	EROSION CONTROL (TYPE D)	SQFT	22,486	0.19	4,272.34	0.18	4,047.48
185	204099	PLANT ESTABLISHMENT WORK	LS	1	5,000.00	5,000.00	55,000.00	55,000.00
186	210250	EROSION CONTROL (BONDED FIBER MATRIX WITH SEEDS)	SQFT	996,422	0.17	169,391.74	0.19	189,320.18
187	210350	FIBER ROLLS	LF	73,420	2.00	146,840.00	2.80	205,576.00
188	210430B	HYDROSEED (WILDLIFE OVERCROSSING)	SQFT	137,692	0.27	37,176.84	0.30	41,307.60
189	210430C	HYDROSEED (RIPARIAN AREA)	SQFT	25,102	0.30	7,530.60	0.19	4,769.38
190	220101	FINISHING ROADWAY	LS	1	150,000.00	150,000.00	510,000.00	510,000.00
191	260203	CLASS 2 AGGREGATE BASE	CY	19,701	35.00	689,535.00	21.00	413,721.00
192	270014	CEMENT TREATED BASE (PLANT-MIXED, CLASS A) [BUS TURNOUT]	CY	143	180.00	25,740.00	167.00	23,881.00
193	390129	HOT MIX ASPHALT (TYPE C)	TON	14,812	62.00	918,344.00	65.00	962,780.00
194	390132	HOT MIX ASPHALT (TYPE A)	TON	9,900	62.00	613,800.00	75.00	742,500.00
195	405030	PORTLAND CEMENT CONCRETE [BUS TURNOUT]	CY	204	250.00	51,000.00	275.00	56,100.00
196	490603	24" CAST-IN-DRILLED-HOLE CONCRETE PILING	LF	3,621	200.00	724,200.00	255.00	923,355.00
197	490617	90" CAST-IN-DRILLED-HOLE CONCRETE PILING	LF	374	3,100.00	1,159,400.00	2,630.00	983,620.00
198	500001	PRESTRESSING CAST-IN-PLACE CONCRETE	LS	1	200,000.00	200,000.00	235,000.00	235,000.00
199	(F) 510051	STRUCTURAL CONCRETE, BRIDGE FOOTING	CY	313	500.00	156,500.00	315.00	98,595.00
200	(F) 510053	STRUCTURAL CONCRETE, BRIDGE	CY	4,342	1,000.00	4,342,000.00	755.00	3,278,210.00
201	(F) 510060	STRUCTURAL CONCRETE (RETAINING WALL)	CY	1,437	375.00	538,875.00	375.00	538,875.00
202	(F) 510086	STRUCTURAL CONCRETE, APPROACH SLAB (TYPE N)	CY	293	650.00	190,450.00	550.00	161,150.00
203	(F) 510502	MINOR CONCRETE (MINOR STRUCTURE)	CY	236	1,000.00	236,000.00	1,180.00	278,480.00
204	510502A	MINOR CONCRETE (RETAINING WALL)	CY	26	675.00	17,550.00	650.00	16,900.00
205	(F) 510526	MINOR CONCRETE (BACKFILL)	CY	9	150.00	1,350.00	150.00	1,350.00
206	(F) 511035	FRACTURED BASALT TEXTURE	SQFT	11,433	7.00	80,031.00	11.00	125,763.00

Riverside County Transportation Department
Summary of Bids
Advertised: June 2, 2015 (Agenda Item: 3-28)
Addenda: 1 (6/25/2015), 2 (7/09/2015), 3 (7/16/2015), 4 (7/24/2015), 5 (7/29/15), 6 (8/6/2015)
Bids Open: 2 pm Date: Wednesday, August 12, 2015

PROJECT: Clinton Keith Road Construction Project - Phase 2
From Whitewood Road to Leon Road
In the City of Murrieta and French Valley Area
Project No. B2-04722

ALTERNATE BID SCHEDULE 2: CLINTON KEITH ROAD, 4-LANE OPTION

					8		9	
					MCM Construction, Inc. Norht Highlands, CA 95660		OHL USA Irvine, CA 92614	
ITEM NO.	ITEM CODE	CONTRACT ITEM	UNITS	QUANTITY	BID UNIT PRICE	BID ESTIMATE	BID UNIT PRICE	BID ESTIMATE
207	519092	JOINT SEAL ASSEMBLY (MR=2 1/2")	LF	273	180.00	49,140.00	275.00	75,075.00
208	(F) 519200A	WILDLIFE OVERCROSSING AND RETAINING WALL SYSTEM	LS	1	2,962,385.00	2,962,385.00	2,800,000.00	2,800,000.00
209	519205A	WILDLIFE UNDERCROSSING SKYLIGHT	EA	6	6,000.00	36,000.00	2,750.00	16,500.00
210	(F) 520102	BAR REINFORCING STEEL (BRIDGE)	LB	1,233,974	0.90	1,110,576.60	1.00	1,233,974.00
211	(F) 520103	BAR REINFORCING STEEL (RETAINING WALL)	LB	161,977	1.30	210,570.10	2.00	323,954.00
212	560252	FURNISH SINGLE SHEET ALUMINUM SIGN (0.80" - FRAMED)	SQFT	377	19.00	7,163.00	30.00	11,310.00
213	566011	ROADSIDE SIGN - ONE POST	EA	69	150.00	10,350.00	190.00	13,110.00
214	586001	INSTALL SIGN (STRAP AND SADDLE BRACKET METHOD)	EA	3	150.00	450.00	75.00	225.00
215	598001	ANTI-GRAFFITI COATING	SQFT	11,433	1.00	11,433.00	1.25	14,291.25
216	641125	36" PLASTIC PIPE	LF	428	74.00	31,672.00	108.00	46,224.00
217	650411	18" REINFORCED CONCRETE PIPE (CLASS IV)	LF	1,088	85.00	92,480.00	102.00	110,976.00
218	650416	24" REINFORCED CONCRETE PIPE (CLASS IV)	LF	4,566	108.00	493,128.00	88.00	401,808.00
219	650420	30" REINFORCED CONCRETE PIPE (CLASS IV)	LF	1,103	138.00	152,214.00	133.00	146,699.00
220	650424	36" REINFORCED CONCRETE PIPE (CLASS IV)	LF	1,958	159.00	311,322.00	134.00	262,372.00
221	650440	60" REINFORCED CONCRETE PIPE (CLASS IV)	LF	534	245.00	130,830.00	282.00	150,588.00
222	650480A	36" WILDLIFE CULVERT	LF	415	241.00	100,015.00	79.00	32,785.00
223	650432	48" REINFORCED CONCRETE PIPE (CLASS IV)	LF	234	244.00	57,096.00	248.00	58,032.00
224	665117	18" BITUMINOUS COATED STEEL PIPE (0.079" THICK)	LF	305	92.00	28,060.00	102.00	31,110.00
225	665136	36" BITUMINOUS COATED STEEL PIPE (0.079" THICK)	LF	134	165.00	22,110.00	117.00	15,678.00
226	665137	36" BITUMINOUS COATED STEEL PIPE RISER (0.109" THICK)	LF	24	437.00	10,488.00	543.00	13,032.00
226.A	692007	18" ENTRANCE TAPER	EA	5	2,783.00	13,915.00	578.00	2,890.00
227	703233	GRATED LINE DRAIN	LF	79	115.00	9,085.00	133.00	10,507.00
228	705011	18" STEEL FLARED END SECTION	EA	5	300.00	1,500.00	658.00	3,290.00
229	705048	36" STEEL FLARED END SECTION	EA	1	1,145.00	1,145.00	1,000.00	1,000.00
230	721015	ROCK SLOPE PROTECTION (LIGHT, METHOD B)	CY	257	45.00	11,565.00	51.00	13,107.00
231	721017	ROCK SLOPE PROTECTION (FACING, METHOD B)	CY	4,866	45.00	218,970.00	51.00	248,166.00
232	(F) 721030	ROCK SLOPE PROTECTION (1/2 TON, METHOD B)	CY	117	45.00	5,265.00	51.00	5,967.00
233	729010	ROCK SLOPE PROTECTION FABRIC	SQYD	10,219	4.00	40,876.00	5.00	51,095.00
234	727901	MINOR CONCRETE (DITCH LINING)	CY	9	700.00	6,300.00	445.00	4,005.00
234.A	731511	MINOR CONCRETE (ISLAND PAVING)	CY	58	400.00	23,200.00	915.00	53,070.00
234.B	000003	MINOR CONCRETE (PEDESTRIAN GUARD)	LF	81	100.00	8,100.00	200.00	16,200.00
235	731516	MINOR CONCRETE (DRIVEWAY)	CY	17	230.00	3,910.00	650.00	11,050.00
236	731521	MINOR CONCRETE (SIDEWALK)	CY	853	240.00	204,720.00	370.00	315,610.00
237	(F) 750001	MISCELLANEOUS IRON AND STEEL	LB	3,433	1.35	4,634.55	3.50	12,015.50
238	(F) 750501	MISCELLANEOUS METAL (BRIDGE)	LB	38,307	10.00	383,070.00	7.50	287,302.50
239	800000A	ONE WAY ACCESS OPENING	EA	9	5,000.00	45,000.00	580.00	5,220.00
240	800300	WIRE MESH FENCE (3/8"x3/8" MESH)	LF	9,265	40.00	370,600.00	47.00	435,455.00

Riverside County Transportation Department
Summary of Bids
Advertised: June 2, 2015 (Agenda Item: 3-28)
Addenda: 1 (6/25/2015), 2 (7/09/2015), 3 (7/16/2015), 4 (7/24/2015), 5 (7/29/15), 6 (8/6/2015)
Bids Open: 2 pm Date: Wednesday, August 12, 2015

PROJECT: Clinton Keith Road Construction Project - Phase 2
From Whitewood Road to Leon Road
In the City of Murrieta and French Valley Area
Project No. B2-04722

ALTERNATE BID SCHEDULE 2: CLINTON KEITH ROAD, 4-LANE OPTION

					8 MCM Construction, Inc. Norht Highlands, CA 95660		9 OHL USA Irvine, CA 92614	
ITEM NO.	ITEM CODE	CONTRACT ITEM	UNITS	QUANTITY	BID UNIT PRICE	BID ESTIMATE	BID UNIT PRICE	BID ESTIMATE
241	800360	CHAIN LINK FENCE (TYPE CL-6)	LF	1,775	16.00	28,400.00	19.00	33,725.00
242	800360A	FENCE (TYPE BW)	LF	870	9.00	7,830.00	11.00	9,570.00
243	800365	CHAIN LINK FENCE (TYPE CL-6,SLATTED)	LF	290	34.00	9,860.00	40.00	11,600.00
244	801100	WIRE MESH GATE (3/8"x3/8" MESH)	EA	4	1,200.00	4,800.00	1,500.00	6,000.00
245	801365A	TUBULAR STEEL GATE	EA	4	4,000.00	16,000.00	4,500.00	18,000.00
246	802620	16' CHAIN LINK GATE (TYPE CL-6)	EA	2	1,600.00	3,200.00	2,050.00	4,100.00
247	000003	WROUGHT IRON FENCE	LF	205	60.00	12,300.00	75.00	15,375.00
248	(F) 833000	METAL RAILING	LF	840	85.00	71,400.00	100.00	84,000.00
249	833020	CHAIN LINK RAILING	LF	415	40.00	16,600.00	47.00	19,505.00
250	839521	CABLE RAILING	LF	302	35.00	10,570.00	41.00	12,382.00
251	839601	CRASH CUSHION (TYPE CAT)	EA	2	4,000.00	8,000.00	5,000.00	10,000.00
252	839602	CRASH CUSHION (TYPE CAT BACKUP)	EA	2	4,000.00	8,000.00	5,000.00	10,000.00
253	839701	CONCRETE BARRIER (TYPE 60)	LF	4,280	70.00	299,600.00	70.00	299,600.00
254	(F) 839702	CONCRETE BARRIER (TYPE 60A)	LF	840	100.00	84,000.00	70.00	58,800.00
255	839703	CONCRETE BARRIER (TYPE 60C)	LF	34	600.00	20,400.00	100.00	3,400.00
256	839705	CONCRETE BARRIER (TYPE 60E MODIFIED)	LF	220	180.00	39,600.00	75.00	16,500.00
257	839726	CONCRETE BARRIER (TYPE 736A)	LF	415	220.00	91,300.00	90.00	37,350.00
258	(F) 839727	CONCRETE BARRIER (TYPE 736 MODIFIED)	LF	840	200.00	168,000.00	90.00	75,600.00
259	840504	4" THERMOPLASTIC TRAFFIC STRIPE	LF	72,085	0.37	26,671.45	0.40	28,834.00
260	840505	6" THERMOPLASTIC TRAFFIC STRIPE	LF	413	1.00	413.00	1.15	474.95
261	840506	8" THERMOPLASTIC TRAFFIC STRIPE	LF	5,103	1.00	5,103.00	1.15	5,868.45
262	840519	THERMOPLASTIC CROSSWALK AND PAVEMENT MARKING	SQFT	2,885	3.30	9,520.50	3.75	10,818.75
263	850111	PAVEMENT MARKER (RETROREFLECTIVE)	EA	1,680	3.50	5,880.00	4.00	6,720.00
264	860251	SIGNAL AND LIGHTING (CLINTON KEITH/MENIFEE)	LS	1	180,000.00	180,000.00	250,000.00	250,000.00
265	860251	SIGNAL AND LIGHTING (CLINTON KEITH/ TROIS VALLEY)	LS	1	180,000.00	180,000.00	250,000.00	250,000.00
266	860556	SOLAR LIGHTING ON WILDLIFE CROSSING (8 LIGHTS)	LS	1	35,000.00	35,000.00	50,000.00	50,000.00
267	860557	SOLAR LIGHTING ON WARM SPRINGS CREEK BRIDGE (4 LIGHTS)	LS	1	25,000.00	25,000.00	35,000.00	35,000.00
268	(F) 860704A	2" INTERCONNECT CONDUIT AND TRACER WIRE	LF	2,800	25.00	70,000.00	20.00	56,000.00
269	861497	MODIFY SIGNAL AND LIGHTING (CLINTON KEITH/WHITEWOOD)	LS	1	50,000.00	50,000.00	100,000.00	100,000.00
270	(F) 867014	12 SINGLE MODE FIBER OPTIC CABLE	LF	2,800	5.00	14,000.00	5.00	14,000.00
271	869039A	NO.6 PULL BOX	EA	11	750.00	8,250.00	700.00	7,700.00
272	019901	MOBILIZATION,DEMOBILZATION, AND FINAL CLEAN UP	LS	1	1,761,000.00	1,761,000.00	1,761,000.00	1,761,000.00
272.A	20052A	TREE TOPPING	LS	1	5,000.00	5,000.00	25,000.00	25,000.00
272.B	000003	DRAINAGE INLET FILTRATION SYSTEM (KRISTAR FLOGARD)	EA	2	1,500.00	3,000.00	4,000.00	8,000.00
272.C	000003	DRAINAGE INLET FILTRATION SYSTEM (CLEARWATER)	EA	1	2,000.00	2,000.00	4,000.00	4,000.00
		ALTERNATE BID SCHEDULE 2, 4-LANE OPTION, TOTAL ITEMS 133 - 272.C				**26,646,999.72**		**26,938,283.39**

Riverside County Transportation Department
Summary of Bids

Advertised: June 2, 2015 (Agenda Item: 3-28)
Addenda: 1 (6/25/2015), 2 (7/09/2015), 3 (7/16/2015), 4 (7/24/2015), 5 (7/29/15), 6 (8/6/2015)
Bids Open: 2 pm Date: Wednesday, August 12, 2015

PROJECT: Clinton Keith Road Construction Project - Phase 2
From Whitewood Road to Leon Road
In the City of Murrieta and French Valley Area
Project No. B2-04722

ALTERNATE BID SCHEDULE 3: EASTERN MUNICIPAL WATER DISTRICT					8 MCM Construction, Inc. Norht Highlands, CA 95660		9 OHL USA Irvine, CA 92614	
ITEM NO.	ITEM CODE	CONTRACT ITEM	UNITS	QUANTITY	BID UNIT PRICE	BID ESTIMATE	BID UNIT PRICE	BID ESTIMATE
273	000003	EMWD WATER LINE THROUGH WARM SPRINGS CREEK	LS	1	150,000.00	150,000.00	150,000.00	150,000.00
		ALTERNATE BID SCHEDULE 3 TOTAL ITEM 273				**150,000.00**		**150,000.00**

ALTERNATE BID SCHEDULE 4: DEMOLISH BUILDINGS					8 MCM Construction, Inc. Norht Highlands, CA 95660		9 OHL USA Irvine, CA 92614	
ITEM NO.	ITEM CODE	CONTRACT ITEM	UNITS	QUANTITY	BID UNIT PRICE	BID ESTIMATE	BID UNIT PRICE	BID ESTIMATE
274	000003	DEMOLISH BUILDINGS	LS	1	38,000.00	38,000.00	74,000.00	74,000.00
		ALTERNATE BID SCHEDULE 4 TOTAL ITEM 274				**38,000.00**		**74,000.00**

	8 MCM Construction, Inc. Norht Highlands, CA 95660	9 OHL USA Irvine, CA 92614
ALTERNATE BID SCHEDULES 1, 2, 3, AND 4 TOTAL ITEMS 1 - 274	**51,495,999.92**	**51,856,932.98**

Riverside County Transportation Department
Summary of Bids
Advertised: June 2, 2015 (Agenda Item: 3-28)
Addenda: 1 (6/25/2015), 2 (7/09/2015), 3 (7/16/2015), 4 (7/24/2015), 5 (7/29/15), 6 (8/6/2015)
Bids Open: 2 pm Date: Wednesday, August 12, 2015

PROJECT: Clinton Keith Road Construction Project - Phase 2
From Whitewood Road to Leon Road
In the City of Murrieta and French Valley Area
Project No. B2-04722

ALTERNATE BID SCHEDULE 1: CLINTON KEITH ROAD, 2-LANE OPTION

					10 Flatiron West, Inc. San Marcos, CA 92078		11 USS Cal Builders Stanton, CA 90680	
ITEM NO.	ITEM CODE	CONTRACT ITEM	UNITS	QUANTITY	BID UNIT PRICE	BID ESTIMATE	BID UNIT PRICE	BID ESTIMATE
1	016101	OBTAIN ENCROACHMENT PERMIT	FA	1	5,000.00	5,000.00	5,000.00	5,000.00
2	017101	MANHOLE (RCFC & WCDS MH 251)	EA	15	6,400.00	96,000.00	4,000.00	60,000.00
3	017103	MANHOLE (RCFC & WCDS MH 252)	EA	8	7,200.00	57,600.00	4,000.00	32,000.00
4	017105	JUNCTION STRUCTURE (RCFC & WCDS JS 227)	EA	17	3,200.00	54,400.00	1,200.00	20,400.00
5	017114	TRANSITION STRUCTURE (RCFC & WCDS TS 303)	EA	1	10,300.00	10,300.00	3,000.00	3,000.00
6	017305	MINOR CONCRETE (TYPE A-8 CURB) (CRS 201)	LF	9,141	14.75	134,829.75	19.50	178,249.50
7	017306	MINOR CONCRETE (CURB RAMP) (CRS 403)	EA	5	4,750.00	23,750.00	1,700.00	8,500.00
8	017307	MINOR CONCRETE (TYPE "C" CURB) (CRS 202)(MOD)	LF	257	26.00	6,682.00	21.50	5,525.50
9	017309	MINOR CONCRETE (TYPE "D" CURB) (CRS 204)	LF	4,008	11.70	46,893.60	17.00	68,136.00
10	019902	COURSE OF CONSTRUCTION INSURANCE	LS	1	65,000.00	65,000.00	260,000.00	260,000.00
11	000001	ITEM DELETED BY ADDENDUM No. 5	----	----	----	----	----	----
12	066102	DUST ABATEMENT	LS	1	40,000.00	40,000.00	18,000.00	18,000.00
13	066105	RESIDENT ENGINEERS OFFICE	LS	1	60,000.00	60,000.00	25,000.00	25,000.00
14	066610	PARTNERING	LS	1	10,000.00	10,000.00	9,000.00	9,000.00
15	070010	PROGRESS SCHEDULE (CRITICAL PATH)	LS	1	15,000.00	15,000.00	15,000.00	15,000.00
16	070030	LEAD COMPLIANCE PLAN	LS	1	1,250.00	1,250.00	8,000.00	8,000.00
17	071321	TEMPORARY FENCE (TYPE CL-6)	LF	908	65.00	59,020.00	16.45	14,936.60
18	071325	TEMPORARY FENCE (TYPE ESA)	LF	2,770	5.00	13,850.00	2.11	5,844.70
19	074016	CONSTRUCTION SITE MANAGEMENT	LS	1	257,000.00	257,000.00	150,000.00	150,000.00
20	120090	CONSTRUCTION AREA SIGNS	LS	1	8,510.00	8,510.00	30,000.00	30,000.00
21	120100	TRAFFIC CONTROL SYSTEM	LS	1	55,200.00	55,200.00	90,000.00	90,000.00
22	120165	CHANNELIZER (SURFACE MOUNTED)	EA	17	45.00	765.00	35.00	595.00
23	130300	PREPARE STORM WATER POLLUTION PREVENTION PLAN	LS	1	30,000.00	30,000.00	1,750.00	1,750.00
24	150606	REMOVE FENCE (TYPE BW)	LF	1,197	2.70	3,231.90	3.50	4,189.50
25	150608	REMOVE CHAIN LINK FENCE	LF	3,179	4.10	13,033.90	2.00	6,358.00
26	000003	REMOVE CHAIN LNK FENCE (SLATTED)	LF	285	7.45	2,123.25	2.50	712.50
27	150662	REMOVE METAL BEAM GUARD RAIL	LF	110	2.70	297.00	30.00	3,300.00
28	150711	REMOVE PAINTED TRAFFIC STRIPE	LF	7,913	0.60	4,747.80	0.60	4,747.80
29	150712	REMOVE PAINTED PAVEMENT MARKING	SQFT	1,104	1.75	1,932.00	1.70	1,876.80
30	150742	REMOVE ROADSIDE SIGN	EA	13	125.00	1,625.00	50.00	650.00
31	150771	REMOVE ASPHALT CONCRETE DIKE	LF	35	26.50	927.50	8.00	280.00
32	152390	RELOCATE ROADSIDE SIGN	EA	4	275.00	1,100.00	125.00	500.00
33	153103	COLD PLANE AND ASPHALT CONCRETE PAVEMENT	SQYD	632	8.05	5,087.60	10.00	6,320.00
34	153130	REMOVE CONCRETE CURB	LF	77	11.00	847.00	4.40	338.80
35	153121	REMOVE CONCRETE (CURB AND GUTTER)	LF	348	5.70	1,983.60	6.60	2,296.80
36	153218	REMOVE CONCRETE SIDEWALK	SQFT	1,534	1.25	1,917.50	6.60	10,124.40
37	153242A	REMOVE CONCRETE (CURB RAMP)	EA	1	1,010.00	1,010.00	500.00	500.00

Riverside County Transportation Department
Summary of Bids
Advertised: June 2, 2015 (Agenda Item: 3-28)
Addenda: 1 (6/25/2015), 2 (7/09/2015), 3 (7/16/2015), 4 (7/24/2015), 5 (7/29/15), 6 (8/6/2015)
Bids Open: 2 pm Date: Wednesday, August 12, 2015

PROJECT: Clinton Keith Road Construction Project - Phase 2
From Whitewood Road to Leon Road
In the City of Murrieta and French Valley Area
Project No. B2-04722

ALTERNATE BID SCHEDULE 1: CLINTON KEITH ROAD, 2-LANE OPTION

					10 Flatiron West, Inc. San Marcos, CA 92078		11 USS Cal Builders Stanton, CA 90680	
ITEM NO.	ITEM CODE	CONTRACT ITEM	UNITS	QUANTITY	BID UNIT PRICE	BID ESTIMATE	BID UNIT PRICE	BID ESTIMATE
38	160101	CLEARING AND GRUBBING	LS	1	250,000.00	250,000.00	466,075.98	466,075.98
39	170101	DEVELOP WATER SUPPLY	LS	1	50,000.00	50,000.00	50,000.00	50,000.00
40	(F) 190101	ROADWAY EXCAVATION	CY	420,501	12.75	5,361,387.75	8.00	3,364,008.00
41	190160	ROCK EXCAVATION	CY	70,000	7.00	490,000.00	4.88	341,600.00
42	(F) 192003	STRUCTURE EXCAVATION (BRIDGE)	CY	954	20.60	19,652.40	40.00	38,160.00
43	(F) 192037	STRUCTURE EXCAVATION (RETAINING WALL)	CY	2,974	3.25	9,665.50	35.00	104,090.00
44	(F) 193003	STRUCTURE BACKFILL (BRIDGE)	CY	585	98.00	57,330.00	55.00	32,175.00
45	(F) 193013	STRUCTURE BACKFILL (RETAINING WALL)	CY	2,432	13.75	33,440.00	45.00	109,440.00
46	(F) 193031	PERVIOUS BACKFILL (RETAINING WALL)	CY	81	250.00	20,250.00	100.00	8,100.00
47	198205A	SUBGRADE ENHANCEMENT GEOTEXTILE (MULTI-AXIAL)	SQYD	52,975	5.05	267,523.75	5.36	283,946.00
48	201600A	CONCRETE PAVER (TURFSTONE)	SQFT	1,800	30.00	54,000.00	15.00	27,000.00
49	203031	EROSION CONTROL (TYPE D)	SQFT	22,486	0.15	3,372.90	0.16	3,597.76
50	204099	PLANT ESTABLISHMENT WORK	LS	1	55,555.00	55,555.00	21,200.00	21,200.00
51	210250	EROSION CONTROL (BONDED FIBER MATRIX WITH SEEDS)	SQFT	1,201,338	0.20	240,267.60	0.16	192,214.08
52	210350	FIBER ROLLS	LF	69,185	2.90	200,636.50	2.37	163,968.45
53	210430A	HYDROSEED (WILDLIFE OVERCROSSING)	SQFT	137,692	0.30	41,307.60	0.27	37,176.84
54	210430B	HYDROSEED (RIPARIAN AREA)	SQFT	25,102	0.15	3,765.30	0.15	3,765.30
55	220101	FINISHING ROADWAY	LS	1	12,400.00	12,400.00	279,833.83	279,833.83
56	260203	CLASS 2 AGGREGATE BASE	CY	14,127	36.00	508,572.00	12.50	176,587.50
57	270014	CEMENT TREATED BASE (PLANT-MIXED, CLASS A) [BUS TURNOUT]	CY	86	135.00	11,610.00	40.00	3,440.00
58	390129	HOT MIX ASPHALT (TYPE C)	TON	10,821	63.70	689,297.70	57.00	616,797.00
59	390132	HOT MIX ASPHALT (TYPE A)	TON	7,240	66.25	479,650.00	64.00	463,360.00
60	394075	PLACE HOT MIX ASPHALT DIKE (TYPE D)	LF	1,414	9.10	12,867.40	10.00	14,140.00
61	405030	PORTLAND CEMENT CONCRETE [BUS TURNOUT]	CY	122	330.00	40,260.00	340.00	41,480.00
62	490603	24" CAST-IN-DRILLED-HOLE CONCRETE PILING	LF	3,621	225.00	814,725.00	220.00	796,620.00
63	490617	90" CAST-IN-DRILLED-HOLE CONCRETE PILING	LF	374	2,765.00	1,034,110.00	2,660.00	994,840.00
64	500001	PRESTRESSING CAST-IN-PLACE CONCRETE	LS	1	208,000.00	208,000.00	195,000.00	195,000.00
65	(F) 510051	STRUCTURAL CONCRETE, BRIDGE FOOTING	CY	313	250.00	78,250.00	500.00	156,500.00
66	(F) 510053	STRUCTURAL CONCRETE, BRIDGE	CY	4,342	640.00	2,778,880.00	1,200.00	5,210,400.00
67	(F) 510060	STRUCTURAL CONCRETE (RETAINING WALL)	CY	620	360.00	223,200.00	570.00	353,400.00
68	(F) 510086	STRUCTURAL CONCRETE, APPROACH SLAB (TYPE N)	CY	293	620.00	181,660.00	1,200.00	351,600.00
69	(F) 510502	MINOR CONCRETE (MINOR STRUCTURE)	CY	249	1,600.00	398,400.00	1,106.00	275,394.00
70	510502A	MINOR CONCRETE (RETAINING WALL)	CY	11	1,400.00	15,400.00	600.00	6,600.00
71	(F) 510526	MINOR CONCRETE (BACKFILL)	CY	9	200.00	1,800.00	200.00	1,800.00
72	(F) 511035	FRACTURED BASALT TEXTURE	SQFT	3,582	10.30	36,894.60	46.00	164,772.00
73	519092	JOINT SEAL ASSEMBLY (MR=2 1/2")	LF	273	295.00	80,535.00	100.00	27,300.00
74	(F) 519200A	WILDLIFE OVERCROSSING AND RETAINING WALL SYSTEM	LS	1	2,500,000.00	2,500,000.00	2,750,000.00	2,750,000.00

Riverside County Transportation Department
Summary of Bids
Advertised: June 2, 2015 (Agenda Item: 3-28)
Addenda: 1 (6/25/2015), 2 (7/09/2015), 3 (7/16/2015), 4 (7/24/2015), 5 (7/29/15), 6 (8/6/2015)
Bids Open: 2 pm Date: Wednesday, August 12, 2015

PROJECT: Clinton Keith Road Construction Project - Phase 2
From Whitewood Road to Leon Road
In the City of Murrieta and French Valley Area
Project No. B2-04722

ALTERNATE BID SCHEDULE 1: CLINTON KEITH ROAD, 2-LANE OPTION

					10 Flatiron West, Inc. San Marcos, CA 92078		11 USS Cal Builders Stanton, CA 90680	
ITEM NO.	ITEM CODE	CONTRACT ITEM	UNITS	QUANTITY	BID UNIT PRICE	BID ESTIMATE	BID UNIT PRICE	BID ESTIMATE
75	519205A	WILDLIFE UNDERCROSSING SKYLIGHT	EA	6	3,740.00	22,440.00	2,500.00	15,000.00
76	(F) 520102	BAR REINFORCING STEEL (BRIDGE)	LB	1,233,974	0.85	1,048,877.90	0.99	1,221,634.26
77	(F) 520103	BAR REINFORCING STEEL (RETAINING WALL)	LB	59,816	0.80	47,852.80	0.93	55,628.88
78	560252	FURNISH SINGLE SHEET ALUMINUM SIGN (0.80" - FRAMED)	SQFT	397	19.00	7,543.00	20.00	7,940.00
79	566011	ROADSIDE SIGN - ONE POST	EA	66	345.00	22,770.00	125.00	8,250.00
80	568001	INSTALL SIGN (STRAP AND SADDLE BRACKET METHOD)	EA	7	125.00	875.00	50.00	350.00
81	598001	ANTI-GRAFFITI COATING	SQFT	3,582	1.75	6,268.50	1.00	3,582.00
82	641125	36" PLASTIC PIPE	LF	428	110.00	47,080.00	150.00	64,200.00
83	650411	18" REINFORCED CONCRETE PIPE (CLASS IV)	LF	592	120.00	71,040.00	88.00	52,096.00
84	650416	24" REINFORCED CONCRETE PIPE (CLASS IV)	LF	4,510	105.00	473,550.00	92.00	414,920.00
85	650420	30" REINFORCED CONCRETE PIPE (CLASS IV)	LF	1,095	125.00	136,875.00	128.00	140,160.00
86	650424	36" REINFORCED CONCRETE PIPE (CLASS IV)	LF	1,958	130.00	254,540.00	152.00	297,616.00
87	650440	60" REINFORCED CONCRETE PIPE (CLASS IV)	LF	534	285.00	152,190.00	310.00	165,540.00
88	650480A	36" WILDLIFE CULVERT	LF	415	140.00	58,100.00	150.00	62,250.00
89	650432	48" REINFORCED CONCRETE PIPE (CLASS IV)	LF	234	190.00	44,460.00	230.00	53,820.00
90	665117	18" BITUMINOUS COATED STEEL PIPE (0.079" THICK)	LF	151	85.00	12,835.00	97.00	14,647.00
91	665136	36" BITUMINOUS COATED STEEL PIPE (0.079" THICK)	LF	134	90.00	12,060.00	110.00	14,740.00
92	665137	36" BITUMINOUS COATED STEEL PIPE RISER (0.109" THICK)	LF	24	815.00	19,560.00	800.00	19,200.00
92.A	692007	18" ENTRANCE TAPER	EA	2	650.00	1,300.00	1,500.00	3,000.00
93	703233	GRATED LINE DRAIN	LF	1,738	85.00	147,730.00	150.00	260,700.00
94	705011	18" STEEL FLARED END SECTION	EA	2	650.00	1,300.00	1,200.00	2,400.00
95	705048	36" STEEL FLARED END SECTION	EA	1	980.00	980.00	1,500.00	1,500.00
96	000001	ITEM DELETED BY ADDENDUM No. 1	---	---	---	---	---	---
97	721015	ROCK SLOPE PROTECTION (LIGHT, METHOD B)	CY	257	124.00	31,868.00	250.00	64,250.00
98	721017	ROCK SLOPE PROTECTION (FACING, METHOD B)	CY	3,109	57.00	177,213.00	400.00	1,243,600.00
99	(F) 721030	ROCK SLOPE PROTECTION (1/2 TON, METHOD B)	CY	117	106.00	12,402.00	180.00	21,060.00
100	729010	ROCK SLOPE PROTECTION FABRIC	SQYD	7,115	2.70	19,210.50	3.20	22,768.00
100.A	731511	MINOR CONCRETE (ISLAND PAVING)	CY	58	650.00	37,700.00	400.00	23,200.00
100.B	000003	MINOR CONCRETE (PEDESTRIAN GUARD)	LF	81	45.00	3,645.00	250.00	20,250.00
101	731516	MINOR CONCRETE (DRIVEWAY)	CY	17	470.00	7,990.00	400.00	6,800.00
102	731521	MINOR CONCRETE (SIDEWALK)	CY	765	280.00	214,200.00	260.00	198,900.00
103	(F) 750001	MISCELLANEOUS IRON AND STEEL	LB	11,274	1.75	19,729.50	2.90	32,694.60
104	(F) 750501	MISCELLANEOUS METAL (BRIDGE)	LB	38,307	8.60	329,440.20	8.56	327,907.92
105	800000A	ONE WAY ACCESS OPENING	EA	9	4,300.00	38,700.00	3,140.00	28,260.00
106	800300	WIRE MESH FENCE (3/8"x3/8" MESH)	LF	9,265	42.00	389,130.00	40.77	377,734.05
107	800360	CHAIN LINK FENCE (TYPE CL-6)	LF	1,775	17.00	30,175.00	16.42	29,145.50
108	800360A	FENCE (TYPE BW)	LF	870	9.45	8,221.50	9.36	8,143.20

Riverside County Transportation Department
Summary of Bids
Advertised: June 2, 2015 (Agenda Item: 3-28)
Addenda: 1 (6/25/2015), 2 (7/09/2015), 3 (7/16/2015), 4 (7/24/2015), 5 (7/29/15), 6 (8/6/2015)
Bids Open: 2 pm Date: Wednesday, August 12, 2015

PROJECT: Clinton Keith Road Construction Project - Phase 2
From Whitewood Road to Leon Road
In the City of Murrieta and French Valley Area
Project No. B2-04722

ALTERNATE BID SCHEDULE 1: CLINTON KEITH ROAD, 2-LANE OPTION

					10 Flatiron West, Inc. San Marcos, CA 92078		11 USS Cal Builders Stanton, CA 90680	
ITEM NO.	ITEM CODE	CONTRACT ITEM	UNITS	QUANTITY	BID UNIT PRICE	BID ESTIMATE	BID UNIT PRICE	BID ESTIMATE
109	800365	CHAIN LINK FENCE (TYPE CL-6,SLATTED)	LF	290	35.00	10,150.00	34.69	10,060.10
110	801100	WIRE MESH GATE (3/8"x3/8" MESH)	EA	6	1,325.00	7,950.00	1,300.00	7,800.00
111	801365A	TUBULAR STEEL GATE	EA	3	4,455.00	13,365.00	2,791.00	8,373.00
112	802620	16' CHAIN LINK GATE (TYPE CL-6)	EA	2	1,800.00	3,600.00	1,750.00	3,500.00
113	(F) 833000	METAL RAILING	LF	840	87.00	73,080.00	85.79	72,063.60
114	839521	CABLE RAILING	LF	302	36.00	10,872.00	35.25	10,645.50
115	839601	CRASH CUSHION (TYPE CAT)	EA	2	4,400.00	8,800.00	4,319.00	8,638.00
116	839602	CRASH CUSHION (TYPE CAT BACKUP)	EA	2	4,400.00	8,800.00	4,319.00	8,638.00
117	839701	CONCRETE BARRIER (TYPE 60)	LF	4,210	62.25	262,072.50	84.40	355,324.00
118	(F) 839702	CONCRETE BARRIER (TYPE 60A)	LF	840	77.55	65,142.00	151.95	127,638.00
119	839703	CONCRETE BARRIER (TYPE 60C)	LF	34	390.00	13,260.00	181.27	6,163.18
120	839705	CONCRETE BARRIER (TYPE 60E MODIFIED)	LF	220	115.00	25,300.00	123.80	27,236.00
121	(F) 839727	CONCRETE BARRIER (TYPE 736 MODIFIED)	LF	840	102.00	85,680.00	217.68	182,851.20
122	840504	4" THERMOPLASTIC TRAFFIC STRIPE	LF	91,938	0.40	36,775.20	0.15	13,790.70
123	840506	8" THERMOPLASTIC TRAFFIC STRIPE	LF	5,961	1.05	6,259.05	1.00	5,961.00
124	840519	THERMOPLASTIC CROSSWALK AND PAVEMENT MARKING	SQFT	2,321	3.35	7,775.35	3.27	7,589.67
125	850111	PAVEMENT MARKER (RETROREFLECTIVE)	EA	1,873	3.55	6,649.15	1.50	2,809.50
126	860251	SIGNAL AND LIGHTING (CLINTON KEITH/ TROIS VALLEY)	LS	1	249,000.00	249,000.00	250,000.00	250,000.00
127	860556	SOLAR LIGHTING ON WILDLIFE CROSSING (8 LIGHTS)	LS	1	83,000.00	83,000.00	50,000.00	50,000.00
128	860557	SOLAR LIGHTING ON WARM SPRINGS CREEK BRIDGE (4 LIGHTS)	LS	1	86,000.00	86,000.00	40,000.00	40,000.00
129	(F) 860704A	2" INTERCONNECT CONDUIT AND TRACER WIRE	LF	2,550	10.10	25,755.00	25.00	63,750.00
130	861497	MODIFY SIGNAL AND LIGHTING (CLINTON KEITH/WHITEWOOD)	LS	1	93,000.00	93,000.00	100,000.00	100,000.00
131	869039A	NO.6 PULL BOX	EA	9	405.00	3,645.00	750.00	6,750.00
132	760090	MOBILIZATION,DEMOBILZATION, AND FINAL CLEAN UP	LS	1	1,591,000.00	1,591,000.00	1,125,000.00	1,125,000.00
132.A	20052A	TREE TOPPING	LS	1	25,000.00	25,000.00	21,000.00	21,000.00
132.B	000003	DRAINAGE INLET FILTRATION SYSTEM (KRISTAR FLOGARD)	EA	1	3,000.00	3,000.00	6,500.00	6,500.00
132.C	000003	DRAINAGE INLET FILTRATION SYSTEM (CLEARWATER)	EA	1	3,000.00	3,000.00	6,500.00	6,500.00
		ALTERNATE BID SCHEDULE 1, 2-LANE OPTION, TOTAL ITEMS 1 - 132.C				**25,073,362.55**		**26,989,982.50**

Riverside County Transportation Department
Summary of Bids
Advertised: June 2, 2015 (Agenda Item: 3-28)
Addenda: 1 (6/25/2015), 2 (7/09/2015), 3 (7/16/2015), 4 (7/24/2015), 5 (7/29/15), 6 (8/6/2015)
Bids Open: 2 pm Date: Wednesday, August 12, 2015

PROJECT: Clinton Keith Road Construction Project - Phase 2
From Whitewood Road to Leon Road
In the City of Murrieta and French Valley Area
Project No. B2-04722

ALTERNATE BID SCHEDULE 2: CLINTON KEITH ROAD, 4-LANE OPTION

					10 Flatiron West, Inc. San Marcos, CA 92078		11 USS Cal Builders Stanton, CA 90680	
ITEM NO.	ITEM CODE	CONTRACT ITEM	UNITS	QUANTITY	BID UNIT PRICE	BID ESTIMATE	BID UNIT PRICE	BID ESTIMATE
133	016101	OBTAIN ENCROACHMENT PERMIT	FA	1	5,000.00	5,000.00	5,000.00	5,000.00
134	017101	MANHOLE (RCFC & WCDS MH 251)	EA	11	6,700.00	73,700.00	4,000.00	44,000.00
135	017103	MANHOLE (RCFC & WCDS MH 252)	EA	6	7,300.00	43,800.00	4,000.00	24,000.00
136	017701A	MODIFIED MANHOLE 1	EA	4	8,300.00	33,200.00	4,500.00	18,000.00
137	017701B	MODIFIED MANHOLE 2	EA	2	7,500.00	15,000.00	4,500.00	9,000.00
138	017105	JUNCTION STRUCTURE (RCFC & WCDS JS 227)	EA	17	3,200.00	54,400.00	1,200.00	20,400.00
139	017114	TRANSITION STRUCTURE (RCFC & WCDS TS 303)	EA	1	10,300.00	10,300.00	3,000.00	3,000.00
140	017305	MINOR CONCRETE (TYPE A-8 CURB) (CRS 201)	LF	12,316	13.70	168,729.20	19.00	234,004.00
141	017306	MINOR CONCRETE (CURB RAMP) (CRS 403)	EA	7	5,000.00	35,000.00	1,700.00	11,900.00
142	017309	MINOR CONCRETE (TYPE "D" CURB) (CRS 204)	LF	1,273	15.35	19,540.55	17.00	21,641.00
143	019902	COURSE OF CONSTRUCTION INSURANCE	LS	1	65,000.00	65,000.00	300,000.00	300,000.00
144	000001	ITEM DELETED BY ADDENDUM No. 5	----	----	----	----	----	----
145	066102	DUST ABATEMENT	LS	1	40,000.00	40,000.00	18,000.00	18,000.00
146	066105	RESIDENT ENGINEERS OFFICE	LS	1	60,000.00	60,000.00	25,000.00	25,000.00
147	066610	PARTNERING	LS	1	10,000.00	10,000.00	9,000.00	9,000.00
148	070010	PROGRESS SCHEDULE (CRITICAL PATH)	LS	1	15,000.00	15,000.00	15,000.00	15,000.00
149	070030	LEAD COMPLIANCE PLAN	LS	1	1,250.00	1,250.00	8,000.00	8,000.00
150	071321	TEMPORARY FENCE (TYPE CL-6)	LF	908	17.00	15,436.00	16.45	14,936.60
151	071325	TEMPORARY FENCE (TYPE ESA)	LF	2,770	5.00	13,850.00	2.11	5,844.70
152	074016	CONSTRUCTION SITE MANAGEMENT	LS	1	257,000.00	257,000.00	150,000.00	150,000.00
153	120090	CONSTRUCTION AREA SIGNS	LS	1	8,555.00	8,555.00	30,000.00	30,000.00
154	120100	TRAFFIC CONTROL SYSTEM	LS	1	55,200.00	55,200.00	90,000.00	90,000.00
155	120165	CHANNELIZER (SURFACE MOUNTED)	EA	17	45.00	765.00	45.00	765.00
156	130300	PREPARE STORM WATER POLLUTION PREVENTION PLAN	LS	1	30,000.00	30,000.00	1,750.00	1,750.00
157	150606	REMOVE FENCE (TYPE BW)	LF	1,197	2.70	3,231.90	2.67	3,195.99
158	150608	REMOVE CHAIN LINK FENCE	LF	3,179	4.10	13,033.90	4.02	12,779.58
159	150608A	REMOVE WROUGHT IRON FENCE	LF	185	19.50	3,607.50	19.23	3,557.55
160	000003	REMOVE CHAIN LINK FENCE (SLATTED)	LF	285	7.45	2,123.25	7.38	2,103.30
161	150662	REMOVE METAL BEAM GUARD RAIL	LF	110	23.50	2,585.00	2.21	243.10
162	150711	REMOVE PAINTED TRAFFIC STRIPE	LF	7,913	0.60	4,747.80	0.60	4,747.80
163	150712	REMOVE PAINTED PAVEMENT MARKING	SQFT	1,104	1.75	1,932.00	1.70	1,876.80
164	150742	REMOVE ROADSIDE SIGN	EA	12	125.00	1,500.00	50.00	600.00
165	150771	REMOVE ASPHALT CONCRETE DIKE	LF	35	25.05	876.75	8.00	280.00
166	152353	RECONSTRUCT IRRIGATION SYSTEM (TROIS VALLEY)	LS	1	17,200.00	17,200.00	17,000.00	17,000.00
167	152390	RELOCATE ROADSIDE SIGN	EA	3	275.00	825.00	150.00	450.00
168	153103	COLD PLANE AND ASPHALT CONCRETE PAVEMENT	SQYD	632	8.05	5,087.60	10.00	6,320.00
169	153130	REMOVE CONCRETE CURB	LF	77	8.35	642.95	4.40	338.80

Riverside County Transportation Department
Summary of Bids
Advertised: June 2, 2015 (Agenda Item: 3-28)
Addenda: 1 (6/25/2015), 2 (7/09/2015), 3 (7/16/2015), 4 (7/24/2015), 5 (7/29/15), 6 (8/6/2015)
Bids Open: 2 pm Date: Wednesday, August 12, 2015

PROJECT: Clinton Keith Road Construction Project - Phase 2
From Whitewood Road to Leon Road
In the City of Murrieta and French Valley Area
Project No. B2-04722

ALTERNATE BID SCHEDULE 2: CLINTON KEITH ROAD, 4-LANE OPTION

					10 Flatiron West, Inc. San Marcos, CA 92078		11 USS Cal Builders Stanton, CA 90680	
ITEM NO.	ITEM CODE	CONTRACT ITEM	UNITS	QUANTITY	BID UNIT PRICE	BID ESTIMATE	BID UNIT PRICE	BID ESTIMATE
170	153121	REMOVE CONCRETE (CURB AND GUTTER)	LF	348	5.55	1,931.40	6.60	2,296.80
171	153218	REMOVE CONCRETE SIDEWALK	SQFT	1,534	1.40	2,147.60	6.60	10,124.40
172	153242A	REMOVE CONCRETE (CURB RAMP)	EA	1	495.00	495.00	500.00	500.00
173	160101	CLEARING AND GRUBBING	LS	1	250,000.00	250,000.00	466,075.98	466,075.98
174	170101	DEVELOP WATER SUPPLY	LS	1	50,000.00	50,000.00	50,000.00	50,000.00
175	(F) 190101	ROADWAY EXCAVATION	CY	429,067	12.80	5,492,057.60	7.54	3,235,165.18
176	190160	ROCK EXCAVATION	CY	70,000	7.00	490,000.00	4.88	341,600.00
177	(F) 192003	STRUCTURE EXCAVATION (BRIDGE)	CY	954	20.60	19,652.40	80.00	76,320.00
178	(F) 192037	STRUCTURE EXCAVATION (RETAINING WALL)	CY	7,991	4.25	33,961.75	60.00	479,460.00
179	(F) 193003	STRUCTURE BACKFILL (BRIDGE)	CY	585	98.00	57,330.00	60.00	35,100.00
180	(F) 193013	STRUCTURE BACKFILL (RETAINING WALL)	CY	6,548	33.45	219,030.60	40.00	261,920.00
181	(F) 193031	PERVIOUS BACKFILL (RETAINING WALL)	CY	341	225.00	76,725.00	100.00	34,100.00
182	198205A	SUBGRADE ENHANCEMENT GEOTEXTILE (MULTI-AXIAL)	SQYD	72,678	5.05	367,023.90	5.36	389,554.08
183	201600A	CONCRETE PAVER (TURFSTONE)	SQFT	1,800	30.00	54,000.00	15.00	27,000.00
184	203031	EROSION CONTROL (TYPE D)	SQFT	22,486	0.15	3,372.90	0.16	3,597.76
185	204099	PLANT ESTABLISHMENT WORK	LS	1	55,555.00	55,555.00	20,000.00	20,000.00
186	210250	EROSION CONTROL (BONDED FIBER MATRIX WITH SEEDS)	SQFT	996,422	0.20	199,284.40	0.16	159,427.52
187	210350	FIBER ROLLS	LF	73,420	2.90	212,918.00	2.37	174,005.40
188	210430B	HYDROSEED (WILDLIFE OVERCROSSING)	SQFT	137,692	0.30	41,307.60	0.27	37,176.84
189	210430C	HYDROSEED (RIPARIAN AREA)	SQFT	25,102	0.15	3,765.30	0.16	4,016.32
190	220101	FINISHING ROADWAY	LS	1	12,400.00	12,400.00	426,157.85	426,157.85
191	260203	CLASS 2 AGGREGATE BASE	CY	19,701	36.00	709,236.00	40.00	788,040.00
192	270014	CEMENT TREATED BASE (PLANT-MIXED, CLASS A) [BUS TURNOUT]	CY	143	106.00	15,158.00	80.00	11,440.00
193	390129	HOT MIX ASPHALT (TYPE C)	TON	14,812	61.20	906,494.40	57.00	844,284.00
194	390132	HOT MIX ASPHALT (TYPE A)	TON	9,900	64.00	633,600.00	64.00	633,600.00
195	405030	PORTLAND CEMENT CONCRETE [BUS TURNOUT]	CY	204	250.00	51,000.00	340.00	69,360.00
196	490603	24" CAST-IN-DRILLED-HOLE CONCRETE PILING	LF	3,621	225.00	814,725.00	120.00	434,520.00
197	490617	90" CAST-IN-DRILLED-HOLE CONCRETE PILING	LF	374	2,765.00	1,034,110.00	600.00	224,400.00
198	500001	PRESTRESSING CAST-IN-PLACE CONCRETE	LS	1	208,000.00	208,000.00	195,000.00	195,000.00
199	(F) 510051	STRUCTURAL CONCRETE, BRIDGE FOOTING	CY	313	250.00	78,250.00	500.00	156,500.00
200	(F) 510053	STRUCTURAL CONCRETE, BRIDGE	CY	4,342	640.00	2,778,880.00	800.00	3,473,600.00
201	(F) 510060	STRUCTURAL CONCRETE (RETAINING WALL)	CY	1,437	400.00	574,800.00	550.00	790,350.00
202	(F) 510086	STRUCTURAL CONCRETE, APPROACH SLAB (TYPE N)	CY	293	620.00	181,660.00	1,200.00	351,600.00
203	(F) 510502	MINOR CONCRETE (MINOR STRUCTURE)	CY	236	1,600.00	377,600.00	1,106.00	261,016.00
204	510502A	MINOR CONCRETE (RETAINING WALL)	CY	26	1,100.00	28,600.00	600.00	15,600.00
205	(F) 510526	MINOR CONCRETE (BACKFILL)	CY	9	200.00	1,800.00	300.00	2,700.00
206	(F) 511035	FRACTURED BASALT TEXTURE	SQFT	11,433	5.65	64,596.45	46.00	525,918.00

Riverside County Transportation Department
Summary of Bids
Advertised: June 2, 2015 (Agenda Item: 3-28)
Addenda: 1 (6/25/2015), 2 (7/09/2015), 3 (7/16/2015), 4 (7/24/2015), 5 (7/29/15), 6 (8/6/2015)
Bids Open: 2 pm Date: Wednesday, August 12, 2015

PROJECT: Clinton Keith Road Construction Project - Phase 2
From Whitewood Road to Leon Road
In the City of Murrieta and French Valley Area
Project No. B2-04722

ALTERNATE BID SCHEDULE 2: CLINTON KEITH ROAD, 4-LANE OPTION

					10 Flatiron West, Inc. San Marcos, CA 92078		11 USS Cal Builders Stanton, CA 90680	
ITEM NO.	ITEM CODE	CONTRACT ITEM	UNITS	QUANTITY	BID UNIT PRICE	BID ESTIMATE	BID UNIT PRICE	BID ESTIMATE
207	519092	JOINT SEAL ASSEMBLY (MR=2 1/2")	LF	273	295.00	80,535.00	100.00	27,300.00
208	(F) 519200A	WILDLIFE OVERCROSSING AND RETAINING WALL SYSTEM	LS	1	2,603,930.00	2,603,930.00	2,541,902.56	2,541,902.56
209	519205A	WILDLIFE UNDERCROSSING SKYLIGHT	EA	6	4,000.00	24,000.00	1,500.00	9,000.00
210	(F) 520102	BAR REINFORCING STEEL (BRIDGE)	LB	1,233,974	0.85	1,048,877.90	0.99	1,221,634.26
211	(F) 520103	BAR REINFORCING STEEL (RETAINING WALL)	LB	161,977	1.00	161,977.00	1.16	187,893.32
212	560252	FURNISH SINGLE SHEET ALUMINUM SIGN (0.80" - FRAMED)	SQFT	377	19.00	7,163.00	25.00	9,425.00
213	566011	ROADSIDE SIGN - ONE POST	EA	69	345.00	23,805.00	300.00	20,700.00
214	586001	INSTALL SIGN (STRAP AND SADDLE BRACKET METHOD)	EA	3	125.00	375.00	300.00	900.00
215	598001	ANTI-GRAFFITI COATING	SQFT	11,433	1.75	20,007.75	1.00	11,433.00
216	641125	36" PLASTIC PIPE	LF	428	120.00	51,360.00	150.00	64,200.00
217	650411	18" REINFORCED CONCRETE PIPE (CLASS IV)	LF	1,088	105.00	114,240.00	88.00	95,744.00
218	650416	24" REINFORCED CONCRETE PIPE (CLASS IV)	LF	4,566	100.00	456,600.00	92.00	420,072.00
219	650420	30" REINFORCED CONCRETE PIPE (CLASS IV)	LF	1,103	115.00	126,845.00	128.00	141,184.00
220	650424	36" REINFORCED CONCRETE PIPE (CLASS IV)	LF	1,958	130.00	254,540.00	152.00	297,616.00
221	650440	60" REINFORCED CONCRETE PIPE (CLASS IV)	LF	534	300.00	160,200.00	310.00	165,540.00
222	650480A	36" WILDLIFE CULVERT	LF	415	150.00	62,250.00	150.00	62,250.00
223	650432	48" REINFORCED CONCRETE PIPE (CLASS IV)	LF	234	200.00	46,800.00	230.00	53,820.00
224	665117	18" BITUMINOUS COATED STEEL PIPE (0.079" THICK)	LF	305	90.00	27,450.00	97.00	29,585.00
225	665136	36" BITUMINOUS COATED STEEL PIPE (0.079" THICK)	LF	134	85.00	11,390.00	110.00	14,740.00
226	665137	36" BITUMINOUS COATED STEEL PIPE RISER (0.109" THICK)	LF	24	815.00	19,560.00	800.00	19,200.00
226.A	692007	18" ENTRANCE TAPER	EA	5	650.00	3,250.00	1,500.00	7,500.00
227	703233	GRATED LINE DRAIN	LF	79	105.00	8,295.00	150.00	11,850.00
228	705011	18" STEEL FLARED END SECTION	EA	5	260.00	1,300.00	1,200.00	6,000.00
229	705048	36" STEEL FLARED END SECTION	EA	1	980.00	980.00	1,500.00	1,500.00
230	721015	ROCK SLOPE PROTECTION (LIGHT, METHOD B)	CY	257	83.00	21,331.00	250.00	64,250.00
231	721017	ROCK SLOPE PROTECTION (FACING, METHOD B)	CY	4,866	70.00	340,620.00	400.00	1,946,400.00
232	(F) 721030	ROCK SLOPE PROTECTION (1/2 TON, METHOD B)	CY	117	87.00	10,179.00	180.00	21,060.00
233	729010	ROCK SLOPE PROTECTION FABRIC	SQYD	10,219	3.50	35,766.50	5.00	51,095.00
234	727901	MINOR CONCRETE (DITCH LINING)	CY	9	750.00	6,750.00	2,000.00	18,000.00
234.A	731511	MINOR CONCRETE (ISLAND PAVING)	CY	58	715.00	41,470.00	400.00	23,200.00
234.B	000003	MINOR CONCRETE (PEDESTRIAN GUARD)	LF	81	45.00	3,645.00	250.00	20,250.00
235	731516	MINOR CONCRETE (DRIVEWAY)	CY	17	290.00	4,930.00	400.00	6,800.00
236	731521	MINOR CONCRETE (SIDEWALK)	CY	853	250.00	213,250.00	260.00	221,780.00
237	(F) 750001	MISCELLANEOUS IRON AND STEEL	LB	3,433	3.00	10,299.00	9.25	31,755.25
238	(F) 750501	MISCELLANEOUS METAL (BRIDGE)	LB	38,307	8.60	329,440.20	8.33	319,097.31
239	800000A	ONE WAY ACCESS OPENING	EA	9	4,300.00	38,700.00	3,140.00	28,260.00
240	800300	WIRE MESH FENCE (3/8"x3/8" MESH)	LF	9,265	41.20	381,718.00	40.77	377,734.05

Riverside County Transportation Department
Summary of Bids
Advertised: June 2, 2015 (Agenda Item: 3-28)
Addenda: 1 (6/25/2015), 2 (7/09/2015), 3 (7/16/2015), 4 (7/24/2015), 5 (7/29/15), 6 (8/6/2015)
Bids Open: 2 pm Date: Wednesday, August 12, 2015

PROJECT: Clinton Keith Road Construction Project - Phase 2
From Whitewood Road to Leon Road
In the City of Murrieta and French Valley Area
Project No. B2-04722

ALTERNATE BID SCHEDULE 2: CLINTON KEITH ROAD, 4-LANE OPTION

					10 Flatiron West, Inc. San Marcos, CA 92078		11 USS Cal Builders Stanton, CA 90680	
ITEM NO.	ITEM CODE	CONTRACT ITEM	UNITS	QUANTITY	BID UNIT PRICE	BID ESTIMATE	BID UNIT PRICE	BID ESTIMATE
241	800360	CHAIN LINK FENCE (TYPE CL-6)	LF	1,775	16.60	29,465.00	16.42	29,145.50
242	800360A	FENCE (TYPE BW)	LF	870	9.45	8,221.50	9.36	8,143.20
243	800365	CHAIN LINK FENCE (TYPE CL-6,SLATTED)	LF	290	35.00	10,150.00	25.00	7,250.00
244	801100	WIRE MESH GATE (3/8"x3/8" MESH)	EA	4	1,325.00	5,300.00	1,300.00	5,200.00
245	801365A	TUBULAR STEEL GATE	EA	4	4,000.00	16,000.00	2,791.00	11,164.00
246	802620	16' CHAIN LINK GATE (TYPE CL-6)	EA	2	1,800.00	3,600.00	5,000.00	10,000.00
247	000003	WROUGHT IRON FENCE	LF	205	65.00	13,325.00	483.00	99,015.00
248	(F) 833000	METAL RAILING	LF	840	87.00	73,080.00	175.00	147,000.00
249	833020	CHAIN LINK RAILING	LF	415	41.00	17,015.00	25.00	10,375.00
250	839521	CABLE RAILING	LF	302	36.00	10,872.00	20.00	6,040.00
251	839601	CRASH CUSHION (TYPE CAT)	EA	2	4,400.00	8,800.00	4,319.00	8,638.00
252	839602	CRASH CUSHION (TYPE CAT BACKUP)	EA	2	4,400.00	8,800.00	4,319.00	8,638.00
253	839701	CONCRETE BARRIER (TYPE 60)	LF	4,280	62.25	266,430.00	84.40	361,232.00
254	(F) 839702	CONCRETE BARRIER (TYPE 60A)	LF	840	77.55	65,142.00	154.33	129,637.20
255	839703	CONCRETE BARRIER (TYPE 60C)	LF	34	390.00	13,260.00	181.27	6,163.18
256	839705	CONCRETE BARRIER (TYPE 60E MODIFIED)	LF	220	115.00	25,300.00	123.82	27,240.40
257	839726	CONCRETE BARRIER (TYPE 736A)	LF	415	102.00	42,330.00	314.26	130,417.90
258	(F) 839727	CONCRETE BARRIER (TYPE 736 MODIFIED)	LF	840	102.00	85,680.00	217.68	182,851.20
259	840504	4" THERMOPLASTIC TRAFFIC STRIPE	LF	72,085	0.40	28,834.00	0.37	26,671.45
260	840505	6" THERMOPLASTIC TRAFFIC STRIPE	LF	413	1.00	413.00	1.00	413.00
261	840506	8" THERMOPLASTIC TRAFFIC STRIPE	LF	5,103	1.00	5,103.00	1.00	5,103.00
262	840519	THERMOPLASTIC CROSSWALK AND PAVEMENT MARKING	SQFT	2,885	3.35	9,664.75	3.30	9,520.50
263	850111	PAVEMENT MARKER (RETROREFLECTIVE)	EA	1,680	3.55	5,964.00	3.50	5,880.00
264	860251	SIGNAL AND LIGHTING (CLINTON KEITH/MENIFEE)	LS	1	248,000.00	248,000.00	248,250.00	248,250.00
265	860251	SIGNAL AND LIGHTING (CLINTON KEITH/ TROIS VALLEY)	LS	1	249,000.00	249,000.00	246,000.00	246,000.00
266	860556	SOLAR LIGHTING ON WILDLIFE CROSSING (8 LIGHTS)	LS	1	83,000.00	83,000.00	50,000.00	50,000.00
267	860557	SOLAR LIGHTING ON WARM SPRINGS CREEK BRIDGE (4 LIGHTS)	LS	1	86,000.00	86,000.00	85,000.00	85,000.00
268	(F) 860704A	2" INTERCONNECT CONDUIT AND TRACER WIRE	LF	2,800	10.10	28,280.00	10.00	28,000.00
269	861497	MODIFY SIGNAL AND LIGHTING (CLINTON KEITH/WHITEWOOD)	LS	1	93,000.00	93,000.00	92,000.00	92,000.00
270	(F) 867014	12 SINGLE MODE FIBER OPTIC CABLE	LF	2,800	1.00	2,800.00	1.00	2,800.00
271	869039A	NO.6 PULL BOX	EA	11	405.00	4,455.00	400.00	4,400.00
272	019901	MOBILIZATION,DEMOBILZATION, AND FINAL CLEAN UP	LS	1	1,761,000.00	1,761,000.00	908,900.00	908,900.00
272.A	20052A	TREE TOPPING	LS	1	45,000.00	45,000.00	21,000.00	21,000.00
272.B	000003	DRAINAGE INLET FILTRATION SYSTEM (KRISTAR FLOGARD)	EA	2	3,000.00	6,000.00	6,500.00	13,000.00
272.C	000003	DRAINAGE INLET FILTRATION SYSTEM (CLEARWATER)	EA	1	3,000.00	3,000.00	6,500.00	6,500.00
		ALTERNATE BID SCHEDULE 2, 4-LANE OPTION, TOTAL ITEMS 133 - 272.C				**27,305,701.30**		**27,616,519.63**

Riverside County Transportation Department
Summary of Bids

Advertised: June 2, 2015 (Agenda Item: 3-28)
Addenda: 1 (6/25/2015), 2 (7/09/2015), 3 (7/16/2015), 4 (7/24/2015), 5 (7/29/15), 6 (8/6/2015)
Bids Open: 2 pm Date: Wednesday, August 12, 2015

PROJECT: Clinton Keith Road Construction Project - Phase 2
From Whitewood Road to Leon Road
In the City of Murrieta and French Valley Area
Project No. B2-04722

ALTERNATE BID SCHEDULE 3: EASTERN MUNICIPAL WATER DISTRICT					10 Flatiron West, Inc. San Marcos, CA 92078		11 USS Cal Builders Stanton, CA 90680	
ITEM NO.	ITEM CODE	CONTRACT ITEM	UNITS	QUANTITY	BID UNIT PRICE	BID ESTIMATE	BID UNIT PRICE	BID ESTIMATE
273	000003	EMWD WATER LINE THROUGH WARM SPRINGS CREEK	LS	1	175,000.00	175,000.00	220,000.00	220,000.00
		ALTERNATE BID SCHEDULE 3 TOTAL ITEM 273				**175,000.00**		**220,000.00**

ALTERNATE BID SCHEDULE 4: DEMOLISH BUILDINGS					10 Flatiron West, Inc. San Marcos, CA 92078		11 USS Cal Builders Stanton, CA 90680	
ITEM NO.	ITEM CODE	CONTRACT ITEM	UNITS	QUANTITY	BID UNIT PRICE	BID ESTIMATE	BID UNIT PRICE	BID ESTIMATE
274	000003	DEMOLISH BUILDINGS	LS	1	25,000.00	25,000.00	80,000.00	80,000.00
		ALTERNATE BID SCHEDULE 4 TOTAL ITEM 274				**25,000.00**		**80,000.00**

	10 Flatiron West, Inc. San Marcos, CA 92078	11 USS Cal Builders Stanton, CA 90680
ALTERNATE BID SCHEDULES 1, 2, 3, AND 4 TOTAL ITEMS 1 - 274	**52,579,063.85**	**54,906,502.13**

Riverside County Transportation Department
Summary of Bids
Advertised: June 2, 2015 (Agenda Item: 3-28)
Addenda: 1 (6/25/2015), 2 (7/09/2015), 3 (7/16/2015), 4 (7/24/2015), 5 (7/29/15), 6 (8/6/2015)
Bids Open: 2 pm Date: Wednesday, August 12, 2015

PROJECT: Clinton Keith Road Construction Project - Phase 2
From Whitewood Road to Leon Road
In the City of Murrieta and French Valley Area
Project No. B2-04722

ALTERNATE BID SCHEDULE 1: CLINTON KEITH ROAD, 2-LANE OPTION

					12 Granite Construction Company Carlsbad, CA 92008			
ITEM NO.	ITEM CODE	CONTRACT ITEM	UNITS	QUANTITY	BID UNIT PRICE	BID ESTIMATE		
1	016101	OBTAIN ENCROACHMENT PERMIT	FA	1	5,000.00	5,000.00		
2	017101	MANHOLE (RCFC & WCDS MH 251)	EA	15	5,000.00	75,000.00		
3	017103	MANHOLE (RCFC & WCDS MH 252)	EA	8	5,200.00	41,600.00		
4	017105	JUNCTION STRUCTURE (RCFC & WCDS JS 227)	EA	17	1,500.00	25,500.00		
5	017114	TRANSITION STRUCTURE (RCFC & WCDS TS 303)	EA	1	4,500.00	4,500.00		
6	017305	MINOR CONCRETE (TYPE A-8 CURB) (CRS 201)	LF	9,141	20.00	182,820.00		
7	017306	MINOR CONCRETE (CURB RAMP) (CRS 403)	EA	5	2,500.00	12,500.00		
8	017307	MINOR CONCRETE (TYPE "C" CURB) (CRS 202)(MOD)	LF	257	20.00	5,140.00		
9	017309	MINOR CONCRETE (TYPE "D" CURB) (CRS 204)	LF	4,008	20.00	80,160.00		
10	019902	COURSE OF CONSTRUCTION INSURANCE	LS	1	65,000.00	65,000.00		
11	000001	ITEM DELETED BY ADDENDUM No. 5	----	----	----	----		
12	066102	DUST ABATEMENT	LS	1	50,000.00	50,000.00		
13	066105	RESIDENT ENGINEERS OFFICE	LS	1	60,000.00	60,000.00		
14	066610	PARTNERING	LS	1	5,000.00	5,000.00		
15	070010	PROGRESS SCHEDULE (CRITICAL PATH)	LS	1	15,000.00	15,000.00		
16	070030	LEAD COMPLIANCE PLAN	LS	1	2,000.00	2,000.00		
17	071321	TEMPORARY FENCE (TYPE CL-6)	LF	908	15.00	13,620.00		
18	071325	TEMPORARY FENCE (TYPE ESA)	LF	2,770	10.00	27,700.00		
19	074016	CONSTRUCTION SITE MANAGEMENT	LS	1	300,000.00	300,000.00		
20	120090	CONSTRUCTION AREA SIGNS	LS	1	15,000.00	15,000.00		
21	120100	TRAFFIC CONTROL SYSTEM	LS	1	40,000.00	40,000.00		
22	120165	CHANNELIZER (SURFACE MOUNTED)	EA	17	150.00	2,550.00		
23	130300	PREPARE STORM WATER POLLUTION PREVENTION PLAN	LS	1	5,000.00	5,000.00		
24	150606	REMOVE FENCE (TYPE BW)	LF	1,197	8.00	9,576.00		
25	150608	REMOVE CHAIN LINK FENCE	LF	3,179	7.00	22,253.00		
26	000003	REMOVE CHAIN LNK FENCE (SLATTED)	LF	285	8.00	2,280.00		
27	150662	REMOVE METAL BEAM GUARD RAIL	LF	110	20.00	2,200.00		
28	150711	REMOVE PAINTED TRAFFIC STRIPE	LF	7,913	1.00	7,913.00		
29	150712	REMOVE PAINTED PAVEMENT MARKING	SQFT	1,104	1.00	1,104.00		
30	150742	REMOVE ROADSIDE SIGN	EA	13	150.00	1,950.00		
31	150771	REMOVE ASPHALT CONCRETE DIKE	LF	35	30.00	1,050.00		
32	152390	RELOCATE ROADSIDE SIGN	EA	4	400.00	1,600.00		
33	153103	COLD PLANE AND ASPHALT CONCRETE PAVEMENT	SQYD	632	20.00	12,640.00		
34	153130	REMOVE CONCRETE CURB	LF	77	35.00	2,695.00		
35	153121	REMOVE CONCRETE (CURB AND GUTTER)	LF	348	15.00	5,220.00		
36	153218	REMOVE CONCRETE SIDEWALK	SQFT	1,534	4.00	6,136.00		
37	153242A	REMOVE CONCRETE (CURB RAMP)	EA	1	1,200.00	1,200.00		

Riverside County Transportation Department
Summary of Bids
Advertised: June 2, 2015 (Agenda Item: 3-28)
Addenda: 1 (6/25/2015), 2 (7/09/2015), 3 (7/16/2015), 4 (7/24/2015), 5 (7/29/15), 6 (8/6/2015)
Bids Open: 2 pm Date: Wednesday, August 12, 2015

PROJECT: Clinton Keith Road Construction Project - Phase 2
From Whitewood Road to Leon Road
In the City of Murrieta and French Valley Area
Project No. B2-04722

ALTERNATE BID SCHEDULE 1: CLINTON KEITH ROAD, 2-LANE OPTION

					12 Granite Construction Company Carlsbad, CA 92008			
ITEM NO.	ITEM CODE	CONTRACT ITEM	UNITS	QUANTITY	BID UNIT PRICE	BID ESTIMATE		
38	160101	CLEARING AND GRUBBING	LS	1	250,000.00	250,000.00		
39	170101	DEVELOP WATER SUPPLY	LS	1	50,000.00	50,000.00		
40	(F) 190101	ROADWAY EXCAVATION	CY	420,501	8.00	3,364,008.00		
41	190160	ROCK EXCAVATION	CY	70,000	5.25	367,500.00		
42	(F) 192003	STRUCTURE EXCAVATION (BRIDGE)	CY	954	30.00	28,620.00		
43	(F) 192037	STRUCTURE EXCAVATION (RETAINING WALL)	CY	2,974	28.00	83,272.00		
44	(F) 193003	STRUCTURE BACKFILL (BRIDGE)	CY	585	100.00	58,500.00		
45	(F) 193013	STRUCTURE BACKFILL (RETAINING WALL)	CY	2,432	35.00	85,120.00		
46	(F) 193031	PERVIOUS BACKFILL (RETAINING WALL)	CY	81	100.00	8,100.00		
47	198205A	SUBGRADE ENHANCEMENT GEOTEXTILE (MULTI-AXIAL)	SQYD	52,975	5.00	264,875.00		
48	201600A	CONCRETE PAVER (TURFSTONE)	SQFT	1,800	20.00	36,000.00		
49	203031	EROSION CONTROL (TYPE D)	SQFT	22,486	0.15	3,372.90		
50	204099	PLANT ESTABLISHMENT WORK	LS	1	20,400.00	20,400.00		
51	210250	EROSION CONTROL (BONDED FIBER MATRIX WITH SEEDS)	SQFT	1,201,338	0.16	192,214.08		
52	210350	FIBER ROLLS	LF	69,185	2.30	159,125.50		
53	210430A	HYDROSEED (WILDLIFE OVERCROSSING)	SQFT	137,692	0.30	41,307.60		
54	210430B	HYDROSEED (RIPARIAN AREA)	SQFT	25,102	0.20	5,020.40		
55	220101	FINISHING ROADWAY	LS	1	430,000.00	430,000.00		
56	260203	CLASS 2 AGGREGATE BASE	CY	14,127	25.00	353,175.00		
57	270014	CEMENT TREATED BASE (PLANT-MIXED, CLASS A) [BUS TURNOUT]	CY	86	120.00	10,320.00		
58	390129	HOT MIX ASPHALT (TYPE C)	TON	10,821	56.00	605,976.00		
59	390132	HOT MIX ASPHALT (TYPE A)	TON	7,240	64.00	463,360.00		
60	394075	PLACE HOT MIX ASPHALT DIKE (TYPE D)	LF	1,414	2.50	3,535.00		
61	405030	PORTLAND CEMENT CONCRETE [BUS TURNOUT]	CY	122	250.00	30,500.00		
62	490603	24" CAST-IN-DRILLED-HOLE CONCRETE PILING	LF	3,621	107.00	387,447.00		
63	490617	90" CAST-IN-DRILLED-HOLE CONCRETE PILING	LF	374	3,040.00	1,136,960.00		
64	500001	PRESTRESSING CAST-IN-PLACE CONCRETE	LS	1	200,000.00	200,000.00		
65	(F) 510051	STRUCTURAL CONCRETE, BRIDGE FOOTING	CY	313	400.00	125,200.00		
66	(F) 510053	STRUCTURAL CONCRETE, BRIDGE	CY	4,342	1,400.00	6,078,800.00		
67	(F) 510060	STRUCTURAL CONCRETE (RETAINING WALL)	CY	620	750.00	465,000.00		
68	(F) 510086	STRUCTURAL CONCRETE, APPROACH SLAB (TYPE N)	CY	293	600.00	175,800.00		
69	(F) 510502	MINOR CONCRETE (MINOR STRUCTURE)	CY	249	1,500.00	373,500.00		
70	510502A	MINOR CONCRETE (RETAINING WALL)	CY	11	1,000.00	11,000.00		
71	(F) 510526	MINOR CONCRETE (BACKFILL)	CY	9	300.00	2,700.00		
72	(F) 511035	FRACTURED BASALT TEXTURE	SQFT	3,582	8.00	28,656.00		
73	519092	JOINT SEAL ASSEMBLY (MR=2 1/2")	LF	273	300.00	81,900.00		
74	(F) 519200A	WILDLIFE OVERCROSSING AND RETAINING WALL SYSTEM	LS	1	2,850,000.00	2,850,000.00		

Riverside County Transportation Department
Summary of Bids
Advertised: June 2, 2015 (Agenda Item: 3-28)
Addenda: 1 (6/25/2015), 2 (7/09/2015), 3 (7/16/2015), 4 (7/24/2015), 5 (7/29/15), 6 (8/6/2015)
Bids Open: 2 pm Date: Wednesday, August 12, 2015

PROJECT: Clinton Keith Road Construction Project - Phase 2
From Whitewood Road to Leon Road
In the City of Murrieta and French Valley Area
Project No. B2-04722

ALTERNATE BID SCHEDULE 1: CLINTON KEITH ROAD, 2-LANE OPTION

					12 Granite Construction Company Carlsbad, CA 92008			
ITEM NO.	ITEM CODE	CONTRACT ITEM	UNITS	QUANTITY	BID UNIT PRICE	BID ESTIMATE		
75	519205A	WILDLIFE UNDERCROSSING SKYLIGHT	EA	6	9,000.00	54,000.00		
76	(F) 520102	BAR REINFORCING STEEL (BRIDGE)	LB	1,233,974	0.87	1,073,557.38		
77	(F) 520103	BAR REINFORCING STEEL (RETAINING WALL)	LB	59,816	0.80	47,852.80		
78	560252	FURNISH SINGLE SHEET ALUMINUM SIGN (0.80" - FRAMED)	SQFT	397	20.00	7,940.00		
79	566011	ROADSIDE SIGN - ONE POST	EA	66	350.00	23,100.00		
80	568001	INSTALL SIGN (STRAP AND SADDLE BRACKET METHOD)	EA	7	750.00	5,250.00		
81	598001	ANTI-GRAFFITI COATING	SQFT	3,582	1.50	5,373.00		
82	641125	36" PLASTIC PIPE	LF	428	90.00	38,520.00		
83	650411	18" REINFORCED CONCRETE PIPE (CLASS IV)	LF	592	100.00	59,200.00		
84	650416	24" REINFORCED CONCRETE PIPE (CLASS IV)	LF	4,510	105.00	473,550.00		
85	650420	30" REINFORCED CONCRETE PIPE (CLASS IV)	LF	1,095	130.00	142,350.00		
86	650424	36" REINFORCED CONCRETE PIPE (CLASS IV)	LF	1,958	140.00	274,120.00		
87	650440	60" REINFORCED CONCRETE PIPE (CLASS IV)	LF	534	315.00	168,210.00		
88	650480A	36" WILDLIFE CULVERT	LF	415	170.00	70,550.00		
89	650432	48" REINFORCED CONCRETE PIPE (CLASS IV)	LF	234	200.00	46,800.00		
90	665117	18" BITUMINOUS COATED STEEL PIPE (0.079" THICK)	LF	151	50.00	7,550.00		
91	665136	36" BITUMINOUS COATED STEEL PIPE (0.079" THICK)	LF	134	100.00	13,400.00		
92	665137	36" BITUMINOUS COATED STEEL PIPE RISER (0.109" THICK)	LF	24	900.00	21,600.00		
92.A	692007	18" ENTRANCE TAPER	EA	2	7,500.00	15,000.00		
93	703233	GRATED LINE DRAIN	LF	1,738	90.00	156,420.00		
94	705011	18" STEEL FLARED END SECTION	EA	2	1,300.00	2,600.00		
95	705048	36" STEEL FLARED END SECTION	EA	1	1,800.00	1,800.00		
96	000001	ITEM DELETED BY ADDENDUM No. 1	----	----	----	----		
97	721015	ROCK SLOPE PROTECTION (LIGHT, METHOD B)	CY	257	118.00	30,326.00		
98	721017	ROCK SLOPE PROTECTION (FACING, METHOD B)	CY	3,109	45.00	139,905.00		
99	(F) 721030	ROCK SLOPE PROTECTION (1/2 TON, METHOD B)	CY	117	115.00	13,455.00		
100	729010	ROCK SLOPE PROTECTION FABRIC	SQYD	7,115	4.00	28,460.00		
100.A	731511	MINOR CONCRETE (ISLAND PAVING)	CY	58	300.00	17,400.00		
100.B	000003	MINOR CONCRETE (PEDESTRIAN GUARD)	LF	81	300.00	24,300.00		
101	731516	MINOR CONCRETE (DRIVEWAY)	CY	17	1,000.00	17,000.00		
102	731521	MINOR CONCRETE (SIDEWALK)	CY	765	320.00	244,800.00		
103	(F) 750001	MISCELLANEOUS IRON AND STEEL	LB	11,274	2.00	22,548.00		
104	(F) 750501	MISCELLANEOUS METAL (BRIDGE)	LB	38,307	7.00	268,149.00		
105	800000A	ONE WAY ACCESS OPENING	EA	9	150.00	1,350.00		
106	800300	WIRE MESH FENCE (3/8"x3/8" MESH)	LF	9,265	40.00	370,600.00		
107	800360	CHAIN LINK FENCE (TYPE CL-6)	LF	1,775	16.00	28,400.00		
108	800360A	FENCE (TYPE BW)	LF	870	9.50	8,265.00		

Riverside County Transportation Department
Summary of Bids

Advertised: June 2, 2015 (Agenda Item: 3-28)
Addenda: 1 (6/25/2015), 2 (7/09/2015), 3 (7/16/2015), 4 (7/24/2015), 5 (7/29/15), 6 (8/6/2015)
Bids Open: 2 pm Date: Wednesday, August 12, 2015

PROJECT: Clinton Keith Road Construction Project - Phase 2
From Whitewood Road to Leon Road
In the City of Murrieta and French Valley Area
Project No. B2-04722

ALTERNATE BID SCHEDULE 1: CLINTON KEITH ROAD, 2-LANE OPTION

					12 Granite Construction Company Carlsbad, CA 92008			
ITEM NO.	ITEM CODE	CONTRACT ITEM	UNITS	QUANTITY	BID UNIT PRICE	BID ESTIMATE		
109	800365	CHAIN LINK FENCE (TYPE CL-6,SLATTED)	LF	290	35.00	10,150.00		
110	801100	WIRE MESH GATE (3/8"x3/8" MESH)	EA	6	1,300.00	7,800.00		
111	801365A	TUBULAR STEEL GATE	EA	3	4,000.00	12,000.00		
112	802620	16' CHAIN LINK GATE (TYPE CL-6)	EA	2	1,700.00	3,400.00		
113	(F) 833000	METAL RAILING	LF	840	85.00	71,400.00		
114	839521	CABLE RAILING	LF	302	35.00	10,570.00		
115	839601	CRASH CUSHION (TYPE CAT)	EA	2	10,000.00	20,000.00		
116	839602	CRASH CUSHION (TYPE CAT BACKUP)	EA	2	8,000.00	16,000.00		
117	839701	CONCRETE BARRIER (TYPE 60)	LF	4,210	60.00	252,600.00		
118	(F) 839702	CONCRETE BARRIER (TYPE 60A)	LF	840	75.00	63,000.00		
119	839703	CONCRETE BARRIER (TYPE 60C)	LF	34	250.00	8,500.00		
120	839705	CONCRETE BARRIER (TYPE 60E MODIFIED)	LF	220	125.00	27,500.00		
121	(F) 839727	CONCRETE BARRIER (TYPE 736 MODIFIED)	LF	840	80.00	67,200.00		
122	840504	4" THERMOPLASTIC TRAFFIC STRIPE	LF	91,938	0.35	32,178.30		
123	840506	8" THERMOPLASTIC TRAFFIC STRIPE	LF	5,961	1.00	5,961.00		
124	840519	THERMOPLASTIC CROSSWALK AND PAVEMENT MARKING	SQFT	2,321	3.30	7,659.30		
125	850111	PAVEMENT MARKER (RETROREFLECTIVE)	EA	1,873	3.50	6,555.50		
126	860251	SIGNAL AND LIGHTING (CLINTON KEITH/ TROIS VALLEY)	LS	1	250,000.00	250,000.00		
127	860556	SOLAR LIGHTING ON WILDLIFE CROSSING (8 LIGHTS)	LS	1	50,000.00	50,000.00		
128	860557	SOLAR LIGHTING ON WARM SPRINGS CREEK BRIDGE (4 LIGHTS)	LS	1	40,000.00	40,000.00		
129	(F) 860704A	2" INTERCONNECT CONDUIT AND TRACER WIRE	LF	2,550	25.00	63,750.00		
130	861497	MODIFY SIGNAL AND LIGHTING (CLINTON KEITH/WHITEWOOD)	LS	1	100,000.00	100,000.00		
131	869039A	NO.6 PULL BOX	EA	9	450.00	4,050.00		
132	760090	MOBILIZATION,DEMOBILZATION, AND FINAL CLEAN UP	LS	1	1,591,000.00	1,591,000.00		
132.A	20052A	TREE TOPPING	LS	1	7,500.00	7,500.00		
132.B	000003	DRAINAGE INLET FILTRATION SYSTEM (KRISTAR FLOGARD)	EA	1	3,500.00	3,500.00		
132.C	000003	DRAINAGE INLET FILTRATION SYSTEM (CLEARWATER)	EA	1	4,000.00	4,000.00		
		ALTERNATE BID SCHEDULE 1, 2-LANE OPTION, TOTAL ITEMS 1 - 132.C				**26,602,146.76**		

Riverside County Transportation Department
Summary of Bids
Advertised: June 2, 2015 (Agenda Item: 3-28)
Addenda: 1 (6/25/2015), 2 (7/09/2015), 3 (7/16/2015), 4 (7/24/2015), 5 (7/29/15), 6 (8/6/2015)
Bids Open: 2 pm Date: Wednesday, August 12, 2015

PROJECT: Clinton Keith Road Construction Project - Phase 2
From Whitewood Road to Leon Road
In the City of Murrieta and French Valley Area
Project No. B2-04722

ALTERNATE BID SCHEDULE 2: CLINTON KEITH ROAD, 4-LANE OPTION

					12 Granite Construction Company Carlsbad, CA 92008			
ITEM NO.	ITEM CODE	CONTRACT ITEM	UNITS	QUANTITY	BID UNIT PRICE	BID ESTIMATE		
133	016101	OBTAIN ENCROACHMENT PERMIT	FA	1	5,000.00	5,000.00		
134	017101	MANHOLE (RCFC & WCDS MH 251)	EA	11	6,500.00	71,500.00		
135	017103	MANHOLE (RCFC & WCDS MH 252)	EA	6	7,000.00	42,000.00		
136	017701A	MODIFIED MANHOLE 1	EA	4	5,000.00	20,000.00		
137	017701B	MODIFIED MANHOLE 2	EA	2	5,000.00	10,000.00		
138	017105	JUNCTION STRUCTURE (RCFC & WCDS JS 227)	EA	17	1,500.00	25,500.00		
139	017114	TRANSITION STRUCTURE (RCFC & WCDS TS 303)	EA	1	4,500.00	4,500.00		
140	017305	MINOR CONCRETE (TYPE A-8 CURB) (CRS 201)	LF	12,316	20.00	246,320.00		
141	017306	MINOR CONCRETE (CURB RAMP) (CRS 403)	EA	7	3,500.00	24,500.00		
142	017309	MINOR CONCRETE (TYPE "D" CURB) (CRS 204)	LF	1,273	20.00	25,460.00		
143	019902	COURSE OF CONSTRUCTION INSURANCE	LS	1	65,000.00	65,000.00		
144	000001	ITEM DELETED BY ADDENDUM No. 5	---	---	---	---		
145	066102	DUST ABATEMENT	LS	1	50,000.00	50,000.00		
146	066105	RESIDENT ENGINEERS OFFICE	LS	1	60,000.00	60,000.00		
147	066610	PARTNERING	LS	1	5,000.00	5,000.00		
148	070010	PROGRESS SCHEDULE (CRITICAL PATH)	LS	1	15,000.00	15,000.00		
149	070030	LEAD COMPLIANCE PLAN	LS	1	2,000.00	2,000.00		
150	071321	TEMPORARY FENCE (TYPE CL-6)	LF	908	15.00	13,620.00		
151	071325	TEMPORARY FENCE (TYPE ESA)	LF	2,770	10.00	27,700.00		
152	074016	CONSTRUCTION SITE MANAGEMENT	LS	1	300.00	300.00		
153	120090	CONSTRUCTION AREA SIGNS	LS	1	15,000.00	15,000.00		
154	120100	TRAFFIC CONTROL SYSTEM	LS	1	40,000.00	40,000.00		
155	120165	CHANNELIZER (SURFACE MOUNTED)	EA	17	150.00	2,550.00		
156	130300	PREPARE STORM WATER POLLUTION PREVENTION PLAN	LS	1	5,000.00	5,000.00		
157	150606	REMOVE FENCE (TYPE BW)	LF	1,197	8.00	9,576.00		
158	150608	REMOVE CHAIN LINK FENCE	LF	3,179	7.00	22,253.00		
159	150608A	REMOVE WROUGHT IRON FENCE	LF	185	12.00	2,220.00		
160	000003	REMOVE CHAIN LINK FENCE (SLATTED)	LF	285	8.00	2,280.00		
161	150662	REMOVE METAL BEAM GUARD RAIL	LF	110	20.00	2,200.00		
162	150711	REMOVE PAINTED TRAFFIC STRIPE	LF	7,913	1.00	7,913.00		
163	150712	REMOVE PAINTED PAVEMENT MARKING	SQFT	1,104	1.00	1,104.00		
164	150742	REMOVE ROADSIDE SIGN	EA	12	150.00	1,800.00		
165	150771	REMOVE ASPHALT CONCRETE DIKE	LF	35	30.00	1,050.00		
166	152353	RECONSTRUCT IRRIGATION SYSTEM (TROIS VALLEY)	LS	1	28,500.00	28,500.00		
167	152390	RELOCATE ROADSIDE SIGN	EA	3	400.00	1,200.00		
168	153103	COLD PLANE AND ASPHALT CONCRETE PAVEMENT	SQYD	632	20.00	12,640.00		
169	153130	REMOVE CONCRETE CURB	LF	77	35.00	2,695.00		

Riverside County Transportation Department
Summary of Bids
Advertised: June 2, 2015 (Agenda Item: 3-28)
Addenda: 1 (6/25/2015), 2 (7/09/2015), 3 (7/16/2015), 4 (7/24/2015), 5 (7/29/15), 6 (8/6/2015)
Bids Open: 2 pm Date: Wednesday, August 12, 2015

PROJECT: Clinton Keith Road Construction Project - Phase 2
From Whitewood Road to Leon Road
In the City of Murrieta and French Valley Area
Project No. B2-04722

ALTERNATE BID SCHEDULE 2: CLINTON KEITH ROAD, 4-LANE OPTION

					12 Granite Construction Company Carlsbad, CA 92008			
ITEM NO.	ITEM CODE	CONTRACT ITEM	UNITS	QUANTITY	BID UNIT PRICE	BID ESTIMATE		
170	153121	REMOVE CONCRETE (CURB AND GUTTER)	LF	348	15.00	5,220.00		
171	153218	REMOVE CONCRETE SIDEWALK	SQFT	1,534	4.00	6,136.00		
172	153242A	REMOVE CONCRETE (CURB RAMP)	EA	1	1,200.00	1,200.00		
173	160101	CLEARING AND GRUBBING	LS	1	250,000.00	250,000.00		
174	170101	DEVELOP WATER SUPPLY	LS	1	50,000.00	50,000.00		
175	(F) 190101	ROADWAY EXCAVATION	CY	429,067	8.00	3,432,536.00		
176	190160	ROCK EXCAVATION	CY	70,000	6.00	420,000.00		
177	(F) 192003	STRUCTURE EXCAVATION (BRIDGE)	CY	954	30.00	28,620.00		
178	(F) 192037	STRUCTURE EXCAVATION (RETAINING WALL)	CY	7,991	25.00	199,775.00		
179	(F) 193003	STRUCTURE BACKFILL (BRIDGE)	CY	585	100.00	58,500.00		
180	(F) 193013	STRUCTURE BACKFILL (RETAINING WALL)	CY	6,548	35.00	229,180.00		
181	(F) 193031	PERVIOUS BACKFILL (RETAINING WALL)	CY	341	75.00	25,575.00		
182	198205A	SUBGRADE ENHANCEMENT GEOTEXTILE (MULTI-AXIAL)	SQYD	72,678	5.00	363,390.00		
183	201600A	CONCRETE PAVER (TURFSTONE)	SQFT	1,800	20.00	36,000.00		
184	203031	EROSION CONTROL (TYPE D)	SQFT	22,486	0.15	3,372.90		
185	204099	PLANT ESTABLISHMENT WORK	LS	1	20,400.00	20,400.00		
186	210250	EROSION CONTROL (BONDED FIBER MATRIX WITH SEEDS)	SQFT	996,422	0.16	159,427.52		
187	210350	FIBER ROLLS	LF	73,420	2.30	168,866.00		
188	210430B	HYDROSEED (WILDLIFE OVERCROSSING)	SQFT	137,692	0.30	41,307.60		
189	210430C	HYDROSEED (RIPARIAN AREA)	SQFT	25,102	0.20	5,020.40		
190	220101	FINISHING ROADWAY	LS	1	300,000.00	300,000.00		
191	260203	CLASS 2 AGGREGATE BASE	CY	19,701	25.00	492,525.00		
192	270014	CEMENT TREATED BASE (PLANT-MIXED, CLASS A) [BUS TURNOUT]	CY	143	120.00	17,160.00		
193	390129	HOT MIX ASPHALT (TYPE C)	TON	14,812	57.00	844,284.00		
194	390132	HOT MIX ASPHALT (TYPE A)	TON	9,900	64.00	633,600.00		
195	405030	PORTLAND CEMENT CONCRETE [BUS TURNOUT]	CY	204	300.00	61,200.00		
196	490603	24" CAST-IN-DRILLED-HOLE CONCRETE PILING	LF	3,621	107.00	387,447.00		
197	490617	90" CAST-IN-DRILLED-HOLE CONCRETE PILING	LF	374	3,020.00	1,129,480.00		
198	500001	PRESTRESSING CAST-IN-PLACE CONCRETE	LS	1	200,000.00	200,000.00		
199	(F) 510051	STRUCTURAL CONCRETE, BRIDGE FOOTING	CY	313	400.00	125,200.00		
200	(F) 510053	STRUCTURAL CONCRETE, BRIDGE	CY	4,342	1,400.00	6,078,800.00		
201	(F) 510060	STRUCTURAL CONCRETE (RETAINING WALL)	CY	1,437	600.00	862,200.00		
202	(F) 510086	STRUCTURAL CONCRETE, APPROACH SLAB (TYPE N)	CY	293	600.00	175,800.00		
203	(F) 510502	MINOR CONCRETE (MINOR STRUCTURE)	CY	236	1,500.00	354,000.00		
204	510502A	MINOR CONCRETE (RETAINING WALL)	CY	26	1,000.00	26,000.00		
205	(F) 510526	MINOR CONCRETE (BACKFILL)	CY	9	300.00	2,700.00		
206	(F) 511035	FRACTURED BASALT TEXTURE	SQFT	11,433	8.00	91,464.00		

Riverside County Transportation Department
Summary of Bids
Advertised: June 2, 2015 (Agenda Item: 3-28)
Addenda: 1 (6/25/2015), 2 (7/09/2015), 3 (7/16/2015), 4 (7/24/2015), 5 (7/29/15), 6 (8/6/2015)
Bids Open: 2 pm Date: Wednesday, August 12, 2015

PROJECT: Clinton Keith Road Construction Project - Phase 2
From Whitewood Road to Leon Road
In the City of Murrieta and French Valley Area
Project No. B2-04722

ALTERNATE BID SCHEDULE 2: CLINTON KEITH ROAD, 4-LANE OPTION

					12 Granite Construction Company Carlsbad, CA 92008			
ITEM NO.	ITEM CODE	CONTRACT ITEM	UNITS	QUANTITY	BID UNIT PRICE	BID ESTIMATE		
207	519092	JOINT SEAL ASSEMBLY (MR=2 1/2")	LF	273	300.00	81,900.00		
208	(F) 519200A	WILDLIFE OVERCROSSING AND RETAINING WALL SYSTEM	LS	1	3,060,000.00	3,060,000.00		
209	519205A	WILDLIFE UNDERCROSSING SKYLIGHT	EA	6	9,000.00	54,000.00		
210	(F) 520102	BAR REINFORCING STEEL (BRIDGE)	LB	1,233,974	0.90	1,110,576.60		
211	(F) 520103	BAR REINFORCING STEEL (RETAINING WALL)	LB	161,977	1.00	161,977.00		
212	560252	FURNISH SINGLE SHEET ALUMINUM SIGN (0.80" - FRAMED)	SQFT	377	20.00	7,540.00		
213	566011	ROADSIDE SIGN - ONE POST	EA	69	350.00	24,150.00		
214	586001	INSTALL SIGN (STRAP AND SADDLE BRACKET METHOD)	EA	3	750.00	2,250.00		
215	598001	ANTI-GRAFFITI COATING	SQFT	11,433	1.50	17,149.50		
216	641125	36" PLASTIC PIPE	LF	428	90.00	38,520.00		
217	650411	18" REINFORCED CONCRETE PIPE (CLASS IV)	LF	1,088	100.00	108,800.00		
218	650416	24" REINFORCED CONCRETE PIPE (CLASS IV)	LF	4,566	105.00	479,430.00		
219	650420	30" REINFORCED CONCRETE PIPE (CLASS IV)	LF	1,103	130.00	143,390.00		
220	650424	36" REINFORCED CONCRETE PIPE (CLASS IV)	LF	1,958	140.00	274,120.00		
221	650440	60" REINFORCED CONCRETE PIPE (CLASS IV)	LF	534	315.00	168,210.00		
222	650480A	36" WILDLIFE CULVERT	LF	415	170.00	70,550.00		
223	650432	48" REINFORCED CONCRETE PIPE (CLASS IV)	LF	234	200.00	46,800.00		
224	665117	18" BITUMINOUS COATED STEEL PIPE (0.079" THICK)	LF	305	50.00	15,250.00		
225	665136	36" BITUMINOUS COATED STEEL PIPE (0.079" THICK)	LF	134	100.00	13,400.00		
226	665137	36" BITUMINOUS COATED STEEL PIPE RISER (0.109" THICK)	LF	24	900.00	21,600.00		
226.A	692007	18" ENTRANCE TAPER	EA	5	7,500.00	37,500.00		
227	703233	GRATED LINE DRAIN	LF	79	120.00	9,480.00		
228	705011	18" STEEL FLARED END SECTION	EA	5	1,300.00	6,500.00		
229	705048	36" STEEL FLARED END SECTION	EA	1	1,800.00	1,800.00		
230	721015	ROCK SLOPE PROTECTION (LIGHT, METHOD B)	CY	257	118.00	30,326.00		
231	721017	ROCK SLOPE PROTECTION (FACING, METHOD B)	CY	4,866	45.00	218,970.00		
232	(F) 721030	ROCK SLOPE PROTECTION (1/2 TON, METHOD B)	CY	117	115.00	13,455.00		
233	729010	ROCK SLOPE PROTECTION FABRIC	SQYD	10,219	4.00	40,876.00		
234	727901	MINOR CONCRETE (DITCH LINING)	CY	9	1,000.00	9,000.00		
234.A	731511	MINOR CONCRETE (ISLAND PAVING)	CY	58	300.00	17,400.00		
234.B	000003	MINOR CONCRETE (PEDESTRIAN GUARD)	LF	81	300.00	24,300.00		
235	731516	MINOR CONCRETE (DRIVEWAY)	CY	17	1,000.00	17,000.00		
236	731521	MINOR CONCRETE (SIDEWALK)	CY	853	330.00	281,490.00		
237	(F) 750001	MISCELLANEOUS IRON AND STEEL	LB	3,433	2.00	6,866.00		
238	(F) 750501	MISCELLANEOUS METAL (BRIDGE)	LB	38,307	7.00	268,149.00		
239	800000A	ONE WAY ACCESS OPENING	EA	9	150.00	1,350.00		
240	800300	WIRE MESH FENCE (3/8"x3/8" MESH)	LF	9,265	40.00	370,600.00		

Riverside County Transportation Department
Summary of Bids
Advertised: June 2, 2015 (Agenda Item: 3-28)
Addenda: 1 (6/25/2015), 2 (7/09/2015), 3 (7/16/2015), 4 (7/24/2015), 5 (7/29/15), 6 (8/6/2015)
Bids Open: 2 pm Date: Wednesday, August 12, 2015

PROJECT: Clinton Keith Road Construction Project - Phase 2
From Whitewood Road to Leon Road
In the City of Murrieta and French Valley Area
Project No. B2-04722

ALTERNATE BID SCHEDULE 2: CLINTON KEITH ROAD, 4-LANE OPTION

					12 Granite Construction Company Carlsbad, CA 92008			
ITEM NO.	ITEM CODE	CONTRACT ITEM	UNITS	QUANTITY	BID UNIT PRICE	BID ESTIMATE		
241	800360	CHAIN LINK FENCE (TYPE CL-6)	LF	1,775	16.00	28,400.00		
242	800360A	FENCE (TYPE BW)	LF	870	9.50	8,265.00		
243	800365	CHAIN LINK FENCE (TYPE CL-6,SLATTED)	LF	290	35.00	10,150.00		
244	801100	WIRE MESH GATE (3/8"x3/8" MESH)	EA	4	1,300.00	5,200.00		
245	801365A	TUBULAR STEEL GATE	EA	4	4,000.00	16,000.00		
246	802620	16' CHAIN LINK GATE (TYPE CL-6)	EA	2	1,700.00	3,400.00		
247	000003	WROUGHT IRON FENCE	LF	205	64.00	13,120.00		
248	(F) 833000	METAL RAILING	LF	840	85.00	71,400.00		
249	833020	CHAIN LINK RAILING	LF	415	40.00	16,600.00		
250	839521	CABLE RAILING	LF	302	35.00	10,570.00		
251	839601	CRASH CUSHION (TYPE CAT)	EA	2	10,000.00	20,000.00		
252	839602	CRASH CUSHION (TYPE CAT BACKUP)	EA	2	8,000.00	16,000.00		
253	839701	CONCRETE BARRIER (TYPE 60)	LF	4,280	60.00	256,800.00		
254	(F) 839702	CONCRETE BARRIER (TYPE 60A)	LF	840	75.00	63,000.00		
255	839703	CONCRETE BARRIER (TYPE 60C)	LF	34	250.00	8,500.00		
256	839705	CONCRETE BARRIER (TYPE 60E MODIFIED)	LF	220	125.00	27,500.00		
257	839726	CONCRETE BARRIER (TYPE 736A)	LF	415	90.00	37,350.00		
258	(F) 839727	CONCRETE BARRIER (TYPE 736 MODIFIED)	LF	840	80.00	67,200.00		
259	840504	4" THERMOPLASTIC TRAFFIC STRIPE	LF	72,085	0.35	25,229.75		
260	840505	6" THERMOPLASTIC TRAFFIC STRIPE	LF	413	1.00	413.00		
261	840506	8" THERMOPLASTIC TRAFFIC STRIPE	LF	5,103	1.00	5,103.00		
262	840519	THERMOPLASTIC CROSSWALK AND PAVEMENT MARKING	SQFT	2,885	3.30	9,520.50		
263	850111	PAVEMENT MARKER (RETROREFLECTIVE)	EA	1,680	3.50	5,880.00		
264	860251	SIGNAL AND LIGHTING (CLINTON KEITH/MENIFEE)	LS	1	250,000.00	250,000.00		
265	860251	SIGNAL AND LIGHTING (CLINTON KEITH/ TROIS VALLEY)	LS	1	250,000.00	250,000.00		
266	860556	SOLAR LIGHTING ON WILDLIFE CROSSING (8 LIGHTS)	LS	1	50,000.00	50,000.00		
267	860557	SOLAR LIGHTING ON WARM SPRINGS CREEK BRIDGE (4 LIGHTS)	LS	1	35,000.00	35,000.00		
268	(F) 860704A	2" INTERCONNECT CONDUIT AND TRACER WIRE	LF	2,800	25.00	70,000.00		
269	861497	MODIFY SIGNAL AND LIGHTING (CLINTON KEITH/WHITEWOOD)	LS	1	100,000.00	100,000.00		
270	(F) 867014	12 SINGLE MODE FIBER OPTIC CABLE	LF	2,800	5.00	14,000.00		
271	869039A	NO.6 PULL BOX	EA	11	450.00	4,950.00		
272	019901	MOBILIZATION,DEMOBILZATION, AND FINAL CLEAN UP	LS	1	1,761,000.00	1,761,000.00		
272.A	20052A	TREE TOPPING	LS	1	7,500.00	7,500.00		
272.B	000003	DRAINAGE INLET FILTRATION SYSTEM (KRISTAR FLOGARD)	EA	2	3,500.00	7,000.00		
272.C	000003	DRAINAGE INLET FILTRATION SYSTEM (CLEARWATER)	EA	1	4,000.00	4,000.00		
		ALTERNATE BID SCHEDULE 2, 4-LANE OPTION, TOTAL ITEMS 133 - 272.C				**28,691,493.77**		

Riverside County Transportation Department
Summary of Bids
Advertised: June 2, 2015 (Agenda Item: 3-28)
Addenda: 1 (6/25/2015), 2 (7/09/2015), 3 (7/16/2015), 4 (7/24/2015), 5 (7/29/15), 6 (8/6/2015)
Bids Open: 2 pm Date: Wednesday, August 12, 2015

PROJECT: Clinton Keith Road Construction Project - Phase 2
From Whitewood Road to Leon Road
In the City of Murrieta and French Valley Area
Project No. B2-04722

ALTERNATE BID SCHEDULE 3: EASTERN MUNICIPAL WATER DISTRICT					12 Granite Construction Company Carlsbad, CA 92008			
ITEM NO.	ITEM CODE	CONTRACT ITEM	UNITS	QUANTITY	BID UNIT PRICE	BID ESTIMATE		
273	000003	EMWD WATER LINE THROUGH WARM SPRINGS CREEK	LS	1	90,000.00	90,000.00		
		ALTERNATE BID SCHEDULE 3 TOTAL ITEM 273				**90,000.00**		

ALTERNATE BID SCHEDULE 4: DEMOLISH BUILDINGS					12 Granite Construction Company Carlsbad, CA 92008			
ITEM NO.	ITEM CODE	CONTRACT ITEM	UNITS	QUANTITY	BID UNIT PRICE	BID ESTIMATE		
274	000003	DEMOLISH BUILDINGS	LS	1	30,000.00	30,000.00		
		ALTERNATE BID SCHEDULE 4 TOTAL ITEM 274				**30,000.00**		

	12 Granite Construction Company Carlsbad, CA 92008	
ALTERNATE BID SCHEDULES 1, 2, 3, AND 4 TOTAL ITEMS 1 - 274	**55,413,640.53**	

Juan C. Perez, P.E., T.E.
Director of Transportation and Land Management

COUNTY OF RIVERSIDE

TRANSPORTATION AND LAND MANAGEMENT AGENCY

Transportation Department

Patricia Romo, P.E.
Assistant Director of Transportation

ADDENDUM NUMBER 1

Dated June 25, 2015

to the
Specifications and Contract Documents
for the construction of

Clinton Keith Road Construction Project – Phase 2
From Whitewood Road to Leon Road
In the City of Murrieta and French Valley Area
Project No. B2-0472

Bids Due: **Wednesday, July 15, 2014; 2:00 p.m.**
14th Street Transportation Annex
3525 14th Street; Riverside, CA 92501
(951) 955-6780

This Addendum is issued pursuant to the Instructions to Bidders, Item No. 8, of the Contract Documents for the reference project. This Addendum is issued as a supplement to the specification and special provisions for the referenced project. The revisions to the specifications shall become a part of the Contract Documents, and each bidder shall acknowledge receipt thereof on the Bid (Proposal). Bidders are directed to sign this addendum as acknowledged, and attach the signed addendum to the contractor's submitted proposal.

Note: During the advertisement period of this project, this document and attachments (if any) are available upon request at the office of the Transportation Department, and are available as a free download at the Transportation Department's website:

http://rctlma.org/trans/Contractors-Corner/Notices-Inviting-Bids

MODIFICATIONS / CLARIFICATIONS TO SPECIAL PROVISIONS:

Item 1: **Revised Proposal.** Refer to "Proposal" pages B2-B12. Delete and replace "Proposal" (pages B2 through B12) with "Proposal (Revised)" attached herewith as **Attachment "A".** The following changes have been made to the Proposal:

a. "Estimated Quantities" are revised for the following bid items:
Item 2, "MANHOLE (RFC & WCDS MH 251)"
Item 40, "ROADWAY EXCAVATION"
Item 54, "HYDROSEED (RIPARIAN AREA)"
Item 98, "ROCK SLOPE PROTECTION (FACING, METHOD B)"
Item 99, "ROCK SLOPE PROTECTION (1/2 TON, METHOD B)"
Item 100, "ROCK SLOPE PROTECTION FABRIC"
Item 175, "ROADWAY EXCAVATION"
Item 189, "HYDROSEED (RIPARIAN AREA)"
Item 217, "18" REINFORCED CONCRETE PIPE (CLASS IV)"
Item 233, "ROCK SLOPE PROTECTION FABRIC"

3525 14th Street · Riverside, CA 92501 · (951) 955-6800
FAX (951) 955-3164

b. The following bid item has been deleted:
Item 96, "ROCK SLOPE PROTECTION (1/4 TON, METHOD B)"

c. The following bid items have been added:
Item 132.A, "TREE TOPPING"
Item 132.B, "DRAINAGE INLET FILTRATION SYSTEM (KRISTAR FLOGARD)"
Item 132.C, "DRAINAGE INLET FILTRATION SYSTEM (CLEARWATER)"
Item 272.A, "TREE TOPPING"
Item 272.B, "DRAINAGE INLET FILTRATION SYSTEM (KRISTAR FLOGARD)"
Item 272.C, "DRAINAGE INLET FILTRATION SYSTEM (CLEARWATER)"
Item 274, "DEMOLISH BUILDINGS"

d. Descriptions have been revised for the following bid items:
Item 72 "FRACTURED BASALT TEXTURE"
Item 206 "FRACTURED BASALT TEXTURE"

Item 2: **Modification to Special Provision.** Refer to modification to Section 5-1.20A on page 21 of the Special Provisions. Modification to Section 5-1.20A is revised as follows:

Add to section 5-1.20A:

The Contractor is encouraged to schedule operations during vacation periods of the school year. The Contractor shall schedule operations at the intersection of Whitewood Ave and Clinton Keith Road to avoid traffic interruptions during AM and PM peak school hours. Lane closures are not allowed during AM or PM peak hours. Vista Murrieta High School AM Peak hours are 6-8 AM weekdays, PM Peak hours are from 2:30 to 4:30 PM on weekdays. Contractor's construction vehicles and equipment is prohibited to be stored or parked near the school during AM and PM peak school hours.

School year calendars are available for reference at http://www.murrieta.k12.ca.us/

Item 3: **Modification to Special Provision.** Refer to modification to Section 7-1.03 on page 27 of the Special Provisions. Modification to Section 7-1.3 is revised as follows:

Add to section 7-1.03:

Contractor shall not access the project from Los Alamos Road. Construction equipment and materials shall not be stored within Los Alamos Road right of way. Contractor's personnel is prohibited from parking vehicles in Los Alamos Road right of way. The Contractor is prohibited from using Los Alamos Road and Briggs Road as a truck haul route.

Item 4: **Modification to Special Provision.** Refer to Section 8, "Prosecution and Progress," on page 27-28 of the Special Provisions. Delete Section 8 on the Special Provisions and replace with the following:

8 PROSECUTION AND PROGRESS

Contractor is advised of the schedule constraints within these special provision and the standard specifications. The table below is included in the special provisions for convenience only and is not a comprehensive listing of all schedule constraints. You are responsible to comply with all schedule constraints necessary to accomplish the work.

Schedule Constraint

Section	Description	Schedule requirements
00-1.14	Traffic Control Revisions	15 days
5-1.20E	TCE	Varies
5-1.36D	Utility Coordination	30 days
5-1.36D	SCE Utility Coordination	90 days
8-1.04H	Pre-construction Survey	Varies
12-2	Construction Funding Sign	10 working days
13-1	SWPPP	10 working days after award
13-1	De Minimus Permit	45 days
13-1	NOT	30 days
14-2	AMA	5 days
14-6	Pre-construction survey and Training program	30 days
14-6.02	Biological	March 1 – August 15
14-7	Paleontological	5 days
19-3	AMA Protection Plan	30 days
19-4	Preblast	15 days
26-4	Aggregate Base	45 days
47-6	MSE	45 days
48-2.01C	False work	35 days
49-3	CIDH	5 working days
51-1	WLOC	45 days
51-1	Methacrylate Crack Treatment	7 days

Add to the 2nd paragraph of Section 8-1.02D(2) with the following:

4. Construction activities that prioritize TCE use prior to expiration. Refer to section 5-1.20E for TCE durations.

Item 5: Addition to Special Provision. The following Special Provisions are added and made part hereof:

15 EXISTING FACILITIES

Replace "Reserved" in Section 15-2.02M with:

15-2.02M Demolish Buildings

15-2.02M(1) General

The County is considering various options for the buildings located at the north east corner of Clinton Keith Road and Avenida Manana. One of the options is the complete removal of the buildings. The decision to keep the buildings is pending a thorough investigation by County Agencies and the processing of agreements. The timing of the

decision to move forward with the demolition remains uncertain. Nevertheless, for bidding purposes, Contractors are required to provide a cost for this item of work.

Commencement of the demolition of the buildings will not start until a written notice to proceed with demolition is issued by the Resident Engineer.

The buildings are located at the northeast corner of Clinton Keith Road and Avenida Manana, north of Station 279+00. The buildings consist of the following structures:

- One 2-story wood frame house of approximately 1,344 SQFT, constructed in 1984,
- One detached wood frame garage of approximately 670 SQFT, constructed in 1997, and
- One Barn/Shed (40' x 60')

The lot and buildings are the property of the County of Riverside; however, Contractor is advised that a tenant is currently occupying the buildings, and access for inspection of buildings during the project advertisement period is restricted. The County anticipates that the buildings will be vacated after the issuance of the Notice to Proceed with construction.

Buildings shall be removed in their entirety and properly disposed of.

The Contractor shall provide all shoring, bracing, tarps, temporary partitions, barricades deemed necessary by the Engineer during demolition work.

The entire foundations shall be removed.

Seal storm and sanitary sewer lines leading from the buildings being demolished at the property line.

Wells, piping and conduits to be abandoned shall be capped or plugged immediately after being disconnected.

Water and Gas services shall be turned off at existing valves by and under the supervision of the utility company owning the service. Notification to the appropriate owner shall be made by the Contractor.

Disconnect electric and telephone wires as per rules and regulations of the utility owner having jurisdiction. Notification of termination of service shall be made by the Contactor to the appropriate utility owner.

The Contractor shall take whatever steps necessary to control dust during the demolition and removal. Water shall be sprayed to adequately wet the debris to control dust during the entire demolition process.

Burying waste material in an embankment will not be allowed.

In the event that the Contractor encounters any materials containing mold or asbestos, the Contractor shall immediately notify the Engineer, and will cease work in the vicinity of the encountered material. You or your sub-contractor will remove and dispose of materials containing or suspected of containing mold or asbestos in accordance with the health and safety requirements for handling the material, using properly trained and licensed personnel.

The Contractor shall take special precautions for the portion of work that may involve handling of materials which contain asbestos. Materials containing asbestos shall be hauled and disposed of away from the premises in strict accordance with all applicable

Federal, State and local regulations, standards and codes governing asbestos removal and abatement.

The Contractor shall apply and have all required permits and licenses to perform asbestos removal/abatement work as required by Federal, State and local regulations.

15-2.02M(2) Payment

The contract lump sum price paid for demolish buildings includes full compensation for furnishing all labor, materials, tools, equipment, and incidentals, permits required, and for doing all work involved in removing and properly disposing of existing buildings, as specified in the Standard Specifications and these special provisions, and as directed by the Engineer.

Item 6: **Addition to Special Provision.** The following Special Provisions are added and made part hereof:

Add as section 20-1.03E:

20-1.03E Topping

Tree topping includes cutting back large-diameter branches or truncating the main stem.

Submit a work plan that describes topping of the tree as shown on the plans. Include in the work plan the equipment, methods, safety plan, and disposal. Obtain Engineer's authorization of the work plan before commencing work activity.

Dispose of topped materials.

Add to section 20-1.04:

The lump sum price paid for tree topping shall include full compensation for furnishing all labor, materials, tools, equipment, and incidentals, and for doing all the work involved in tree topping, complete in place, as shown on the plans, and as specified in the Standard Specifications and these Special Provisions. No additional compensation will be allowed therefor.

Item 7: **Addition to Special Provision.** The following Special Provisions are added and made part hereof:

Add to section 51-1.03G(1):

The Fractured Basalt concrete surface texture, at locations shown on plans, must match the pattern number 1550.

Form liner information is available for reference at:

http://www.specformliners.com/patterns/rock-patterns-2.html

Replace the 5th paragraph in section 51-1.03G(1) with:

Construct three (3) test panels for each concrete color noted in this section. The colors shall be determined from the following standard colors:

1. 6063 "Winter Beige"
2. 0288 "Autumn Beige"
3. C-15 "Coachella Sand"

The Engineer determines the color of the surface texture that will be used from the completed test panels.

Add to section 51-1.03G(2):

The form liners can be obtained from the manufacturer, Spec Formliners., 1038 E. 4th Street, Santa Ana, CA 92701, telephone (714) 429–9500

You may use other form liners if approved by the Engineer.

The Contractor shall submit the manufacturer's construction details to the Engineer for review and approval prior to installation.

Item 8: **Addition to Special Provision.** The following Special Provisions are added and made part hereof:

Add to section 49:

The shaft bottoms must be thoroughly cleaned and inspected. At the Contractor's expense, a Mini Shaft Inspection Device (Mini SID) downhole camera shall be used to inspect the shaft bottoms, under the supervision of the Resident Engineer.

Item 9: **Addition to Special Provision.** The following Special Provisions are added and made part hereof:

Add as section 70-5.04A:

70-5.04A DRAINAGE INLET FILTRATION SYSTEM

Section 70-5.04A includes specifications for constructing drainage inlet filtration systems.

Submit a certificate of compliance from the manufacturer.

70-5.04A (2) MATERIALS

Drainage inlet filtration system must be furnished and installed as shown on the plans and under these special provisions.

The allowable drainage inlet filtration systems as shown on the plans must consist of the following or a Department-authorized equal.

1. Kristar – Flogard Plus Catch Basin Insert Filter. The Flogard can be obtained from the manufacturer Oldcastle Stormwater Solutions, 7921 Southpark Plaza, Suite 200, Littleton, CO 80120.
   Phone 1-800-579-8819.
2. ClearWater BMP-01. The Clearwater BMP-01 can be obtained from the manufacturer, Clearwater Solutions Inc, P.O. Box 2078, Vista CA, 92085.
   Phone 1-800-758-8817.

70-5.04A(3) CONSTRUCTION

Installation of drainage inlet filtration system must comply with the manufacturer's instructions.

70-5.04A(4) PAYMENT

Drainage inlet filtration system will be measured and paid for by the unit, determined from actual count of units installed in place.

The unit price paid for installation of the drainage inlet filtration system shall include full compensation for furnishing all labor, materials, tools, equipment, and incidentals, and for doing the work involved installing the drainage inlet filtration system as shown on the plans, and as directed by the Engineer.

Item 10: Supplemental Project Information. Refer to section 2-1.06B, Supplemental Project Information, page 20 of the special provisions. The following additional Supplemental Project Information is available for inspection on the County of Riverside Transportation Department website:

http://rctlma.org/trans/Contractors-Corner/Notices-Inviting-Bids

- MSE Wall Calculations
- Revised Standard Specifications, Dated 02-22-13
- Cross Sections, 2 Lane Option
- Cross Sections, 4 Lane Option

Item 11: Supplemental Project Information – Environmental Permits. Refer to section 2-1.06B, Supplemental Project Information, page 20 of the special provisions. A draft copy of the "California Department of Fish and Game Streambed Alteration Agreement" is available for inspection on the County of Riverside Transportation Department website:

http://rctlma.org/trans/Contractors-Corner/Notices-Inviting-Bids

No major deviations are expected between the final Streambed Alteration Agreement and the draft copy provided.

A final copy of the "California Department of Fish and Wildlife Streambed Alteration Agreement", the "California Regional Water Quality Control Board Water Quality Certification", and the "United States Army Corps of Engineers Permit" will become available to the awarded contractor.

In the event that new restrictions are required by the final "California Department of Fish and Game Streambed Alteration Agreement" or by the "California Regional Water Quality Control Board Water Quality Certification", or by the "United States Army Corps of Engineers Permit", any extra work performed by the Contractor as a result of such restrictions shall be handled as time and materials as approved by the Resident Engineer.

When the final "California Department of Fish and Game Streambed Alteration Agreement", "California Regional Water Quality Control Board Water Quality Certification", and "United States Army Corps of Engineers Permit" become available, these shall become part of the Contract Documents.

MODIFICATIONS / CLARIFICATIONS TO THE PLANS

Item 12: Plan sheet revisions. The following Plan sheets are revised by **Attachment "B"** and made a part hereof

a. Delete and replace the following sixteen *(16)* plan sheets from the 2-lane option set:

1. Plan sheet 18 of 191
2. Plan sheet 19 of 191
3. Plan sheet 20 of 191
4. Plan sheet 21 of 191
5. Plan sheet 22 of 191
6. Plan sheet 23 of 191
7. Plan sheet 24 of 191
8. Plan sheet 25 of 191
9. Plan sheet 26 of 191
10. Plan sheet 27 of 191
11. Plan sheet 28 of 191
12. Plan sheet 54 of 191
13. Plan sheet 115 of 191
14. Plan sheet 116 of 191
15. Plan sheet 117 of 191
16. Plan sheet 118 of 191

b. Delete and replace the following nineteen *(19)* plan sheets from the 4-lane option set:

1. Plan sheet 18 of 195
2. Plan sheet 19 of 195
3. Plan sheet 20 of 195
4. Plan sheet 21 of 195
5. Plan sheet 22 of 195
6. Plan sheet 23 of 195
7. Plan sheet 24 of 195
8. Plan sheet 25 of 195
9. Plan sheet 26 of 195
10. Plan sheet 27 of 195
11. Plan sheet 28 of 195
12. Plan sheet 29 of 195
13. Plan sheet 56 of 195
14. Plan sheet 117 of 195
15. Plan sheet 118 of 195
16. Plan sheet 119 of 195
17. Plan sheet 120 of 195
18. Plan sheet 121 of 195
19. Plan sheet 122 of 195

Note: All revised plan sheets are posted on the County website and are available for download during the advertisement period.
http://rctlma.org/trans/Contractors-Corner/Notices-Inviting-Bids

This addendum has been prepared under the direction of the following registered Civil Engineer(s):

Alicia Cannon

Alicia Cannon, PE

REGISTERED PROFESSIONAL ENGINEER
ALICIA CANNON
No. C- 69168
CIVIL
STATE OF CALIFORNIA

Recommended By:

Signature on File

John Marcinek, PE
County Project Manager

Concurrence:

6/25/15

Khalid Nasim, PE
Engineering Division Manager

Acknowledged: _____ Date: _____
(Contractor)

JRJ:jrj:rr

Note: Refer to Instruction to Bidders Item No. 8, "Addenda". Submission of all addendum pages and non-bidding document attachments of addendum are not necessary for Bid submittal. Submittal of this acknowledgement page is adequate for Bid reception. Bidders are reminded to list addendum number(s) received on the first page of the Bid form (Proposal).

ATTACHMENTS

A – Revised Proposal

B – Revised Clinton Keith Road Plan Sheets
(16) Plan sheets from the 2-lane option set
(19) Plan sheets from the 4-lane option set

C – Contractors Questions and Responses

Clinton Keith Road Construction Project - Phase 2
From Whitewood Road to Leon Road
In the City of Murrieta and French Valley Area
Project No. B2-0472

REVISED PROPOSAL (2-Lane Option)

ITEM No.	ITEM CODE	ITEM	UNIT	ESTIMATED QUANTITY	ITEM PRICE (IN FIGURES)	TOTAL (IN FIGURES)
ALTERNATE BID SCHEDULE 1: CLINTON KEITH ROAD, 2-LANE OPTION						
1	016101	OBTAIN ENCROACHMENT PERMIT	FA	1	5,000.00	5,000.00
2	017101	MANHOLE (RCFC & WCDS MH 251)	EA	15		
3	017103	MANHOLE (RCFC & WCDS MH 252)	EA	8		
4	017105	JUNCTION STRUCTURE (RCFC & WCDS JS 227)	EA	17		
5	017114	TRANSITION STRUCTURE (RCFC & WCDS TS 303)	EA	1		
6	017305	MINOR CONCRETE (TYPE A-8 CURB) (CRS 201)	LF	9,141		
7	017306	MINOR CONCRETE (CURB RAMP) (CRS 403)	EA	5		
8	017307	MINOR CONCRETE (TYPE "C" CURB) (CRS 202)(MOD)	LF	257		
9	017309	MINOR CONCRETE (TYPE "D" CURB) (CRS 204)	LF	4,008		
10	019902	COURSE OF CONSTRUCTION INSURANCE	LS	1		
11	000003	PRECONSTRUCTION SURVEY	LS	1		
12	066102	DUST ABATEMENT	LS	1		
13	066105	RESIDENT ENGINEERS OFFICE	LS	1		
14	066610	PARTNERING	LS	1		
15	070010	PROGRESS SCHEDULE (CRITICAL PATH)	LS	1		
16	070030	LEAD COMPLIANCE PLAN	LS	1		
17	071321	TEMPORARY FENCE (TYPE CL-6)	LF	908		
18	071325	TEMPORARY FENCE (TYPE ESA)	LF	2,770		
19	074016	CONSTRUCTION SITE MANAGEMENT	LS	1		
20	120090	CONSTRUCTION AREA SIGNS	LS	1		
21	120100	TRAFFIC CONTROL SYSTEM	LS	1		
22	120165	CHANNELIZER (SURFACE MOUNTED)	EA	17		
23	130300	PREPARE STORM WATER POLLUTION PREVENTION PLAN	LS	1		
24	150606	REMOVE FENCE (TYPE BW)	LF	1,197		
25	150608	REMOVE CHAIN LINK FENCE	LF	3,179		
26	000003	REMOVE CHAIN LNK FENCE (SLATTED)	LF	285		

Note: See 'Instructions to Bidders' item 15, Like Bid Items. "Like Bid Item" bidding requirement does not apply to this project.

REVISED PROPOSAL (2-Lane Option)

ITEM No.	ITEM CODE	ITEM	UNIT	ESTIMATED QUANTITY	ITEM PRICE (IN FIGURES)	TOTAL (IN FIGURES)
ALTERNATE BID SCHEDULE 1: CLINTON KEITH ROAD, 2-LANE OPTION						
27	150662	REMOVE METAL BEAM GUARD RAIL	LF	110		
28	150711	REMOVE PAINTED TRAFFIC STRIPE	LF	7,913		
29	150712	REMOVE PAINTED PAVEMENT MARKING	SQFT	1,104		
30	150742	REMOVE ROADSIDE SIGN	EA	13		
31	150771	REMOVE ASPHALT CONCRETE DIKE	LF	35		
32	152390	RELOCATE ROADSIDE SIGN	EA	4		
33	153103	COLD PLANE AND ASPHALT CONCRETE PAVEMENT	SQYD	347		
34	153130	REMOVE CONCRETE CURB	LF	77		
35	153121	REMOVE CONCRETE (CURB AND GUTTER)	LF	348		
36	153218	REMOVE CONCRETE SIDEWALK	SQFT	1,534		
37	153242A	REMOVE CONCRETE (CURB RAMP)	EA	1		
38	160101	CLEARING AND GRUBBING	LS	1		
39	170101	DEVELOP WATER SUPPLY	LS	1		
40	(F) 190101	ROADWAY EXCAVATION	CY	**350,501**		
41	(F) 190160	ROCK EXCAVATION (CONTROLLED BLASTING)	CY	70,000		
42	(F) 192003	STRUCTURE EXCAVATION (BRIDGE)	CY	954		
43	(F) 192037	STRUCTURE EXCAVATION (RETAINING WALL)	CY	2,974		
44	(F) 193003	STRUCTURE BACKFILL (BRIDGE)	CY	585		
45	(F) 193013	STRUCTURE BACKFILL (RETAINING WALL)	CY	2,432		
46	(F) 193031	PERVIOUS BACKFILL (RETAINING WALL)	CY	81		
47	198205A	SUBGRADE ENHANCEMENT GEOTEXTILE (MULTI-AXIAL)	SQYD	52,975		
48	201600A	CONCRETE PAVER (TURFSTONE)	EA	630		
49	203031	EROSION CONTROL (TYPE D)	SQFT	22,486		
50	204099	PLANT ESTABLISHMENT WORK	LS	1		
51	210250	EROSION CONTROL (BONDED FIBER MATRIX WITH SEEDS)	SQFT	1,201,338		
52	210350	FIBER ROLLS	LF	69,185		
53	210430A	HYDROSEED (WILDLIFE OVERCROSSING)	SQFT	137,692		
54	210430B	HYDROSEED (RIPARIAN AREA)	SQFT	**25,102**		
55	220101	FINISHING ROADWAY	LS	1		

Note: See 'Instructions to Bidders' item 15, Like Bid Items. "Like Bid Item" bidding requirement does not apply to this project.

REVISED PROPOSAL (2-Lane Option)

ITEM No.	ITEM CODE	ITEM	UNIT	ESTIMATED QUANTITY	ITEM PRICE (IN FIGURES)	TOTAL (IN FIGURES)
ALTERNATE BID SCHEDULE 1: CLINTON KEITH ROAD, 2-LANE OPTION						
56	260203	CLASS 2 AGGREGATE BASE	CY	14,127		
57	270014	CEMENT TREATED BASE (PLANT-MIXED, CLASS A)	CY	86		
58	390129	HOT MIX ASPHALT (TYPE C)	TON	10,821		
59	390132	HOT MIX ASPHALT (TYPE A)	TON	7,240		
60	394075	PLACE HOT MIX ASPHALT DIKE (TYPE D)	LF	1,414		
61	405030	PORTLAND CEMENT CONCRETE	CY	122		
62	490603	24" CAST-IN-DRILLED-HOLE CONCRETE PILING	LF	3,162		
63	490617	90" CAST-IN-DRILLED-HOLE CONCRETE PILING	LF	384		
64	500001	PRESTRESSING CAST-IN-PLACE CONCRETE	LS	1		
65	(F) 510051	STRUCTURAL CONCRETE, BRIDGE FOOTING	CY	313		
66	(F) 510053	STRUCTURAL CONCRETE, BRIDGE	CY	4,342		
67	(F) 510060	STRUCTURAL CONCRETE (RETAINING WALL)	CY	530		
68	(F) 510086	STRUCTURAL CONCRETE, APPROACH SLAB (TYPE N)	CY	293		
69	(F) 510502	MINOR CONCRETE (MINOR STRUCTURE)	CY	217		
70	510502A	MINOR CONCRETE (RETAINING WALL)	CY	11		
71	(F) 510526	MINOR CONCRETE (BACKFILL)	CY	9		
72	**(F) 511035**	FRACTURED **BASALT** TEXTURE	SQFT	3,582		
73	519092	JOINT SEAL ASSEMBLY (MR=2 1/2")	LF	273		
74	(F) 519200A	WILDLIFE OVERCROSSING AND RETAINING WALL SYSTEM	LS	1		
75	519205A	WILDLIFE UNDERCROSSING SKYLIGHT	EA	6		
76	(F) 520102	BAR REINFORCING STEEL (BRIDGE)	LB	1,233,974		
77	(F) 520103	BAR REINFORCING STEEL (RETAINING WALL)	LB	59,816		
78	560252	FURNISH SINGLE SHEET ALUMINUM SIGN (0.80" - FRAMED)	SQFT	397		
79	566011	ROADSIDE SIGN - ONE POST	EA	66		
80	568001	INSTALL SIGN (STRAP AND SADDLE BRACKET METHOD)	EA	7		
81	598001	ANTI-GRAFFITI COATING	SQFT	3,582		
82	641125	36" PLASTIC PIPE	LF	428		
83	650411	18" REINFORCED CONCRETE PIPE (CLASS IV)	LF	592		
84	650416	24" REINFORCED CONCRETE PIPE (CLASS IV)	LF	4,510		

Note: See 'Instructions to Bidders' item 15, Like Bid Items. "Like Bid Item" bidding requirement does not apply to this project.

REVISED PROPOSAL (2-Lane Option)

ITEM No.	ITEM CODE	ITEM	UNIT	ESTIMATED QUANTITY	ITEM PRICE (IN FIGURES)	TOTAL (IN FIGURES)
ALTERNATE BID SCHEDULE 1: CLINTON KEITH ROAD, 2-LANE OPTION						
85	650420	30" REINFORCED CONCRETE PIPE (CLASS IV)	LF	1,095		
86	650424	36" REINFORCED CONCRETE PIPE (CLASS IV)	LF	1,958		
87	650440	60" REINFORCED CONCRETE PIPE (CLASS IV)	LF	534		
88	650480A	36" WILDLIFE CULVERT	LF	415		
89	650432	48" REINFORCED CONCRETE PIPE (CLASS IV)	LF	234		
90	665117	18" BITUMINOUS COATED STEEL PIPE (0.079" THICK)	LF	151		
91	665136	36" BITUMINOUS COATED STEEL PIPE (0.079" THICK)	LF	134		
92	665137	36" BITUMINOUS COATED STEEL PIPE RISER (0.109" THICK)	LF	24		
93	703233	GRATED LINE DRAIN	LF	1,738		
94	705011	18" STEEL FLARED END SECTION	EA	2		
95	705048	36" STEEL FLARED END SECTION	EA	1		
96	**000001**	**ITEM DELETED BY ADDENDUM**	-----	-----	-----	-----
97	721015	ROCK SLOPE PROTECTION (LIGHT, METHOD B)	CY	257		
98	721017	ROCK SLOPE PROTECTION (FACING, METHOD B)	CY	**3,171**		
99	(F) 721030	ROCK SLOPE PROTECTION (1/2 TON, METHOD B)	CY	**117**		
100	729010	ROCK SLOPE PROTECTION FABRIC	SQYD	**7,247**		
101	731516	MINOR CONCRETE (DRIVEWAY)	CY	17		
102	731521	MINOR CONCRETE (SIDEWALK)	CY	765		
103	(F) 750001	MISCELLANEOUS IRON AND STEEL	LB	11,084		
104	(F) 750501	MISCELLANEOUS METAL (BRIDGE)	LB	38,307		
105	800000A	ONE WAY ACCESS OPENING	EA	9		
106	800300	WIRE MESH FENCE (3/8"x3/8" MESH)	LF	9,265		
107	800360	CHAIN LINK FENCE (TYPE CL-6)	LF	1,775		
108	800360A	FENCE (TYPE BW)	LF	870		
109	800365	CHAIN LINK FENCE (TYPE CL-6,SLATTED)	LF	290		
110	801100	WIRE MESH GATE (3/8"x3/8" MESH)	EA	6		
111	801365A	TUBULAR STEEL GATE	EA	3		
112	802620	16' CHAIN LINK GATE (TYPE CL-6)	EA	2		
113	(F) 833000	METAL RAILING	LF	840		

Note: See 'Instructions to Bidders' item 15, Like Bid Items. "Like Bid Item" bidding requirement does not apply to this project.

REVISED PROPOSAL (2-Lane Option)

ITEM No.	ITEM CODE	ITEM	UNIT	ESTIMATED QUANTITY	ITEM PRICE (IN FIGURES)	TOTAL (IN FIGURES)
ALTERNATE BID SCHEDULE 1: CLINTON KEITH ROAD, 2-LANE OPTION						
114	839521	CABLE RAILING	LF	302		
115	839601	CRASH CUSHION (TYPE CAT)	EA	2		
116	839602	CRASH CUSHION (TYPE CAT BACKUP)	EA	2		
117	839701	CONCRETE BARRIER (TYPE 60)	LF	4,210		
118	(F) 839702	CONCRETE BARRIER (TYPE 60A)	LF	840		
119	839703	CONCRETE BARRIER (TYPE 60C)	LF	34		
120	839705	CONCRETE BARRIER (TYPE 60E MODIFIED)	LF	220		
121	(F) 839727	CONCRETE BARRIER (TYPE 736 MODIFIED)	LF	840		
122	840504	4" THERMOPLASTIC TRAFFIC STRIPE	LF	91,938		
123	840506	8" THERMOPLASTIC TRAFFIC STRIPE	LF	5,961		
124	840519	THERMOPLASTIC CROSSWALK AND PAVEMENT MARKING	SQFT	2,321		
125	850111	PAVEMENT MARKER (RETROREFLECTIVE)	EA	1,873		
126	860251	SIGNAL AND LIGHTING (CLINTON KEITH/ TROIS VALLEY)	LS	1		
127	860556	SOLAR LIGHTING ON WILDLIFE CROSSING (8 LIGHTS)	LS	1		
128	860557	SOLAR LIGHTING ON WARM SPRINGS CREEK BRIDGE (4 LIGHTS)	LS	1		
129	(F) 860704A	2" INTERCONNECT CONDUIT AND TRACER WIRE	LF	2,550		
130	861497	MODIFY SIGNAL AND LIGHTING (CLINTON KEITH/WHITEWOOD)	LS	1		
131	869039A	NO.6 PULL BOX	EA	9		
132	760090	MOBILIZATION,DEMOBILZATION, AND FINAL CLEAN UP	LS	1		
132.A	**20052A**	**TREE TOPPING**	**LS**	**1**		
132.B	**000003**	**DRAINAGE INLET FILTRATION SYSTEM (KRISTAR FLOGARD)**	**EA**	**1**		
132.C	**000003**	**DRAINAGE INLET FILTRATION SYSTEM (CLEARWATER)**	**EA**	**1**		

ALTERNATE BID
SCHEDULE 1
TOTAL: _____ $_____
ITEMS 1-132.C "WORDS"

Note: See 'Instructions to Bidders' item 15, Like Bid Items. "Like Bid Item" bidding requirement does not apply to this project.

Clinton Keith Road Construction Project - Phase 2
From Whitewood Road to Leon Road
In the City of Murrieta and French Valley Area
Project No. B2-0472

REVISED PROPOSAL (4-Lane Option)

ITEM No.	ITEM CODE	ITEM	UNIT	ESTIMATED QUANTITY	ITEM PRICE (IN FIGURES)	TOTAL (IN FIGURES)
ALTERNATE BID SCHEDULE 2: CLINTON KEITH ROAD, 4-LANE OPTION						
133	016101	OBTAIN ENCROACHMENT PERMIT	FA	1	5,000.00	5,000.00
134	017101	MANHOLE (RCFC & WCDS MH 251)	EA	11		
135	017103	MANHOLE (RCFC & WCDS MH 252)	EA	6		
136	017701A	MODIFIED MANHOLE 1	EA	4		
137	017701B	MODIFIED MANHOLE 2	EA	2		
138	017105	JUNCTION STRUCTURE (RCFC & WCDS JS 227)	EA	17		
139	017114	TRANSITION STRUCTURE (RCFC & WCDS TS 303)	EA	1		
140	017305	MINOR CONCRETE (TYPE A-8 CURB) (CRS 201)	LF	12,316		
141	017306	MINOR CONCRETE (CURB RAMP) (CRS 403)	EA	7		
142	017309	MINOR CONCRETE (TYPE "D" CURB) (CRS 204)	LF	1,273		
143	019902	COURSE OF CONSTRUCTION INSURANCE	LS	1		
144	000003	PRECONSTRUCTION SURVEY	LS	1		
145	066102	DUST ABATEMENT	LS	1		
146	066105	RESIDENT ENGINEERS OFFICE	LS	1		
147	066610	PARTNERING	LS	1		
148	070010	PROGRESS SCHEDULE (CRITICAL PATH)	LS	1		
149	070030	LEAD COMPLIANCE PLAN	LS	1		
150	071321	TEMPORARY FENCE (TYPE CL-6)	LF	908		
151	071325	TEMPORARY FENCE (TYPE ESA)	LF	2,770		
152	074016	CONSTRUCTION SITE MANAGEMENT	LS	1		
153	120090	CONSTRUCTION AREA SIGNS	LS	1		
154	120100	TRAFFIC CONTROL SYSTEM	LS	1		
155	120165	CHANNELIZER (SURFACE MOUNTED)	EA	17		
156	130300	PREPARE STORM WATER POLLUTION PREVENTION PLAN	LS	1		
157	150606	REMOVE FENCE (TYPE BW)	LF	1,197		
158	150608	REMOVE CHAIN LINK FENCE	LF	3,179		

Note: See 'Instructions to Bidders' item 15, Like Bid Items. "Like Bid Item" bidding requirement does not apply to this project.

REVISED PROPOSAL (4-Lane Option)

ITEM No.	ITEM CODE	ITEM	UNIT	ESTIMATED QUANTITY	ITEM PRICE (IN FIGURES)	TOTAL (IN FIGURES)
ALTERNATE BID SCHEDULE 2: CLINTON KEITH ROAD, 4-LANE OPTION						
159	150608A	REMOVE WROUGHT IRON FENCE	LF	185		
160	000003	REMOVE CHAIN LINK FENCE (SLATTED)	LF	285		
161	150662	REMOVE METAL BEAM GUARD RAIL	LF	110		
162	150711	REMOVE PAINTED TRAFFIC STRIPE	LF	7,913		
163	150712	REMOVE PAINTED PAVEMENT MARKING	SQFT	1,104		
164	150742	REMOVE ROADSIDE SIGN	EA	12		
165	150771	REMOVE ASPHALT CONCRETE DIKE	LF	35		
166	152353	RECONSTRUCT IRRIGATION SYSTEM (TROIS VALLEY)	LS	1		
167	152390	RELOCATE ROADSIDE SIGN	EA	3		
168	153103	COLD PLANE AND ASPHALT CONCRETE PAVEMENT	SQYD	347		
169	153130	REMOVE CONCRETE CURB	LF	77		
170	153121	REMOVE CONCRETE (CURB AND GUTTER)	LF	348		
171	153218	REMOVE CONCRETE SIDEWALK	SQFT	1,534		
172	153242A	REMOVE CONCRETE (CURB RAMP)	EA	1		
173	160101	CLEARING AND GRUBBING	LS	1		
174	170101	DEVELOP WATER SUPPLY	LS	1		
175	(F) 190101	ROADWAY EXCAVATION	CY	**359,067**		
176	(F) 190160	ROCK EXCAVATION (CONTROLLED BLASTING)	CY	70,000		
177	(F) 192003	STRUCTURE EXCAVATION (BRIDGE)	CY	954		
178	(F) 192037	STRUCTURE EXCAVATION (RETAINING WALL)	CY	7,991		
179	(F) 193003	STRUCTURE BACKFILL (BRIDGE)	CY	585		
180	(F) 193013	STRUCTURE BACKFILL (RETAINING WALL)	CY	6,548		
181	(F) 193031	PERVIOUS BACKFILL (RETAINING WALL)	CY	341		
182	198205A	SUBGRADE ENHANCEMENT GEOTEXTILE (MULTI-AXIAL)	SQYD	72,678		
183	201600A	CONCRETE PAVER (TURFSTONE)	EA	630		
184	203031	EROSION CONTROL (TYPE D)	SQFT	22,486		
185	204099	PLANT ESTABLISHMENT WORK	LS	1		
186	210250	EROSION CONTROL (BONDED FIBER MATRIX WITH SEEDS)	SQFT	996,422		
187	210350	FIBER ROLLS	LF	73,420		

Note: See 'Instructions to Bidders' item 15, Like Bid Items. "Like Bid Item" bidding requirement does not apply to this project.

REVISED PROPOSAL (4-Lane Option)

ITEM No.	ITEM CODE	ITEM	UNIT	ESTIMATED QUANTITY	ITEM PRICE (IN FIGURES)	TOTAL (IN FIGURES)
ALTERNATE BID SCHEDULE 2: CLINTON KEITH ROAD, 4-LANE OPTION						
188	210430B	HYDROSEED (WILDLIFE OVERCROSSING)	SQFT	137,692		
189	210430C	HYDROSEED (RIPARIAN AREA)	SQFT	**25,102**		
190	220101	FINISHING ROADWAY	LS	1		
191	260203	CLASS 2 AGGREGATE BASE	CY	19,701		
192	270014	CEMENT TREATED BASE (PLANT-MIXED, CLASS A)	CY	143		
193	390129	HOT MIX ASPHALT (TYPE C)	TON	14,812		
194	390132	HOT MIX ASPHALT (TYPE A)	TON	9,900		
195	405030	PORTLAND CEMENT CONCRETE	CY	204		
196	490603	24" CAST-IN-DRILLED-HOLE CONCRETE PILING	LF	3,162		
197	490617	90" CAST-IN-DRILLED-HOLE CONCRETE PILING	LF	384		
198	500001	PRESTRESSING CAST-IN-PLACE CONCRETE	LS	1		
199	(F) 510051	STRUCTURAL CONCRETE, BRIDGE FOOTING	CY	313		
200	(F) 510053	STRUCTURAL CONCRETE, BRIDGE	CY	4,342		
201	(F) 510060	STRUCTURAL CONCRETE (RETAINING WALL)	CY	1,347		
202	(F) 510086	STRUCTURAL CONCRETE, APPROACH SLAB (TYPE N)	CY	293		
203	(F) 510502	MINOR CONCRETE (MINOR STRUCTURE)	CY	204		
204	510502A	MINOR CONCRETE (RETAINING WALL)	CY	26		
205	(F) 510526	MINOR CONCRETE (BACKFILL)	CY	9		
206	**(F) 511035**	FRACTURED **BASALT** TEXTURE	SQFT	11,433		
207	519092	JOINT SEAL ASSEMBLY (MR=2 1/2")	LF	273		
208	(F) 519200A	WILDLIFE OVERCROSSING AND RETAINING WALL SYSTEM	LS	1		
209	519205A	WILDLIFE UNDERCROSSING SKYLIGHT	EA	6		
210	(F) 520102	BAR REINFORCING STEEL (BRIDGE)	LB	1,233,974		
211	(F) 520103	BAR REINFORCING STEEL (RETAINING WALL)	LB	161,977		
212	560252	FURNISH SINGLE SHEET ALUMINUM SIGN (0.80" - FRAMED)	SQFT	377		
213	566011	ROADSIDE SIGN - ONE POST	EA	69		
214	586001	INSTALL SIGN (STRAP AND SADDLE BRACKET METHOD)	EA	3		
215	598001	ANTI-GRAFFITI COATING	SQFT	11,433		
216	641125	36" PLASTIC PIPE	LF	428		

Note: See 'Instructions to Bidders' item 15, Like Bid Items. "Like Bid Item" bidding requirement does not apply to this project.

REVISED PROPOSAL (4-Lane Option)

ITEM No.	ITEM CODE	ITEM	UNIT	ESTIMATED QUANTITY	ITEM PRICE (IN FIGURES)	TOTAL (IN FIGURES)
ALTERNATE BID SCHEDULE 2: CLINTON KEITH ROAD, 4-LANE OPTION						
217	650411	18" REINFORCED CONCRETE PIPE (CLASS IV)	LF	**1,263**		
218	650416	24" REINFORCED CONCRETE PIPE (CLASS IV)	LF	4,566		
219	650420	30" REINFORCED CONCRETE PIPE (CLASS IV)	LF	1,103		
220	650424	36" REINFORCED CONCRETE PIPE (CLASS IV)	LF	1,958		
221	650440	60" REINFORCED CONCRETE PIPE (CLASS IV)	LF	534		
222	650480A	36" WILDLIFE CULVERT	LF	415		
223	650432	48" REINFORCED CONCRETE PIPE (CLASS IV)	LF	234		
224	665117	18" BITUMINOUS COATED STEEL PIPE (0.079" THICK)	LF	305		
225	665136	36" BITUMINOUS COATED STEEL PIPE (0.079" THICK)	LF	134		
226	665137	36" BITUMINOUS COATED STEEL PIPE RISER (0.109" THICK)	LF	24		
227	703233	GRATED LINE DRAIN	LF	79		
228	705011	18" STEEL FLARED END SECTION	EA	5		
229	705048	36" STEEL FLARED END SECTION	EA	1		
230	721015	ROCK SLOPE PROTECTION (LIGHT, METHOD B)	CY	257		
231	721017	ROCK SLOPE PROTECTION (FACING, METHOD B)	CY	4,928		
232	(F) 721030	ROCK SLOPE PROTECTION (1/2 TON, METHOD B)	CY	117		
233	729010	ROCK SLOPE PROTECTION FABRIC	SQYD	**10,351**		
234	727901	MINOR CONCRETE (DITCH LINING)	CY	9		
235	731516	MINOR CONCRETE (DRIVEWAY)	CY	17		
236	731521	MINOR CONCRETE (SIDEWALK)	CY	853		
237	(F) 750001	MISCELLANEOUS IRON AND STEEL	LB	3,243		
238	(F) 750501	MISCELLANEOUS METAL (BRIDGE)	LB	38,307		
239	800000A	ONE WAY ACCESS OPENING	EA	9		
240	800300	WIRE MESH FENCE (3/8"x3/8" MESH)	LF	9,265		
241	800360	CHAIN LINK FENCE (TYPE CL-6)	LF	1,775		
242	800360A	FENCE (TYPE BW)	LF	870		
243	800365	CHAIN LINK FENCE (TYPE CL-6,SLATTED)	LF	290		
244	801100	WIRE MESH GATE (3/8"x3/8" MESH)	EA	4		
245	801365A	TUBULAR STEEL GATE	EA	4		

Note: See 'Instructions to Bidders' item 15, Like Bid Items. "Like Bid Item" bidding requirement does not apply to this project.

REVISED PROPOSAL (4-Lane Option)

ITEM No.	ITEM CODE	ITEM	UNIT	ESTIMATED QUANTITY	ITEM PRICE (IN FIGURES)	TOTAL (IN FIGURES)
ALTERNATE BID SCHEDULE 2: CLINTON KEITH ROAD, 4-LANE OPTION						
246	802620	16' CHAIN LINK GATE (TYPE CL-6)	EA	2		
247	000003	WROUGHT IRON FENCE	LF	205		
248	(F) 833000	METAL RAILING	LF	840		
249	833020	CHAIN LINK RAILING	LF	415		
250	839521	CABLE RAILING	LF	302		
251	839601	CRASH CUSHION (TYPE CAT)	EA	2		
252	839602	CRASH CUSHION (TYPE CAT BACKUP)	EA	2		
253	839701	CONCRETE BARRIER (TYPE 60)	LF	4,280		
254	(F) 839702	CONCRETE BARRIER (TYPE 60A)	LF	840		
255	839703	CONCRETE BARRIER (TYPE 60C)	LF	34		
256	839705	CONCRETE BARRIER (TYPE 60E MODIFIED)	LF	220		
257	839726	CONCRETE BARRIER (TYPE 736A)	LF	415		
258	(F) 839727	CONCRETE BARRIER (TYPE 736 MODIFIED)	LF	840		
259	840504	4" THERMOPLASTIC TRAFFIC STRIPE	LF	72,085		
260	840505	6" THERMOPLASTIC TRAFFIC STRIPE	LF	413		
261	840506	8" THERMOPLASTIC TRAFFIC STRIPE	LF	5,103		
262	840519	THERMOPLASTIC CROSSWALK AND PAVEMENT MARKING	SQFT	2,885		
263	850111	PAVEMENT MARKER (RETROREFLECTIVE)	EA	1,680		
264	860251	SIGNAL AND LIGHTING (CLINTON KEITH/MENIFEE)	LS	1		
265	860251	SIGNAL AND LIGHTING (CLINTON KEITH/ TROIS VALLEY)	LS	1		
266	860556	SOLAR LIGHTING ON WILDLIFE CROSSING (8 LIGHTS)	LS	1		
267	860557	SOLAR LIGHTING ON WARM SPRINGS CREEK BRIDGE (4 LIGHTS)	LS	1		
268	(F) 860704A	2" INTERCONNECT CONDUIT AND TRACER WIRE	LF	2,800		
269	861497	MODIFY SIGNAL AND LIGHTING (CLINTON KEITH/WHITEWOOD)	LS	1		
270	(F) 867014	12 SINGLE MODE FIBER OPTIC CABLE	LF	2,800		
271	869039A	NO.6 PULL BOX	EA	11		
272	019901	MOBILIZATION,DEMOBILZATION, AND FINAL CLEAN UP	LS	1		
272.A	**20052A**	**TREE TOPPING**	**LS**	**1**		
272.B	**000003**	**DRAINAGE INLET FILTRATION SYSTEM (KRISTAR FLOGARD)**	**EA**	**2**		
272.C	**000003**	**DRAINAGE INLET FILTRATION SYSTEM (CLEARWATER)**	**EA**	**1**		

ALTERNATE BID
SCHEDULE 2
TOTAL: _____ $_____
ITEMS 133-272.C "WORDS"

Note: See 'Instructions to Bidders' item 15, Like Bid Items. "Like Bid Item" bidding requirement does not apply to this project.

Clinton Keith Road Construction Project - Phase 2
From Whitewood Road to Leon Road
In the City of Murrieta and French Valley Area
Project No. B2-0472

REVISED PROPOSAL

ITEM No.	ITEM CODE	ITEM	UNIT	ESTIMATED QUANTITY	ITEM PRICE (IN FIGURES)	TOTAL (IN FIGURES)
ALTERNATE BID SCHEDULE 3: EASTERN MUNICIPAL WATER DISTRICT						
273	000003	EMWD WATER LINE THROUGH WARM SPRINGS CREEK	LS	1		

ALTERNATE BID
SCHEDULE 3
TOTAL: _____ $_____
ITEM 273 "WORDS"

ALTERNATE BID SCHEDULE 4: DEMOLISH BUILDINGS						
274	000003	DEMOLISH BUILDINGS	LS	1		

ALTERNATE BID
SCHEDULE 4
TOTAL: _____ $_____
ITEM 274 "WORDS"

ALTERNATE BID SCEHEDULES 1, 2, 3 AND 4

PROJECT
TOTAL: _____ $_____
ITEMS 1-274 "WORDS"

In addition to 'Instruction to Bidders' item 13, Alternate Bid Schedules:
- **The County may award Alternate Bid Schedule 1 or Alteranate Bid Schedule 2 items of work.**
- **If Alternate Bid Schedule 1 is selected, then Alternate Bid Schedule 2 will not be awarded and vice versa.**

Note: See 'Instructions to Bidders' item 15, Like Bid Items. "Like Bid Item" bidding requirement does not apply to this project.

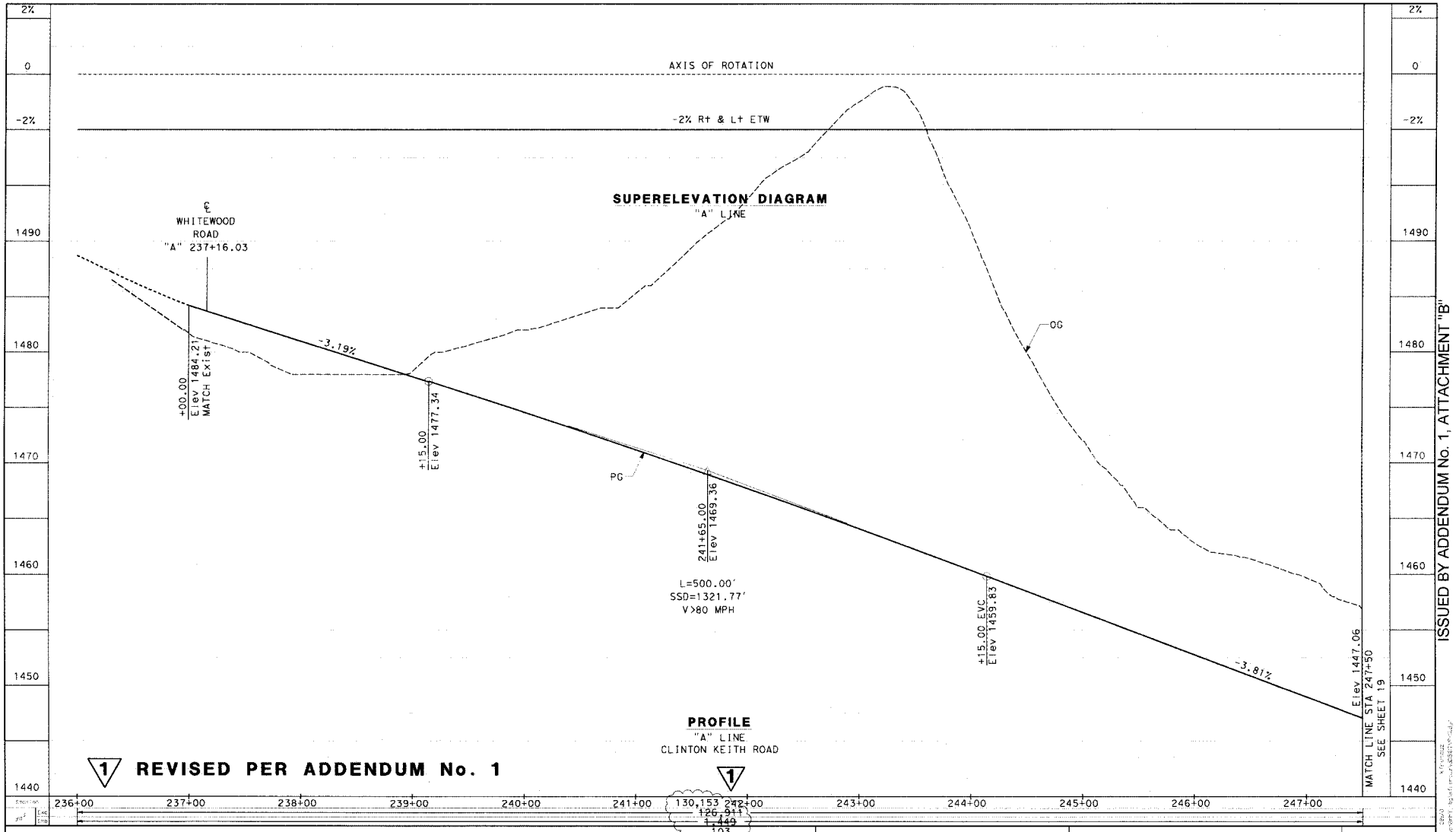

ISSUED BY ADDENDUM No. 1, ATTACHMENT "B"

Don't Dig... Until You Call U.S.A. Toll Free
800-227-2600
for the location of buried utility lines.
Don't disrupt vital services.
BURIED CABLE
TWO WORKING DAYS BEFORE YOU DIG

SCALES: 1" = 40' HOR
1" = 4' VER

CH2MHILL ENGINEERING COMPANY

ALICIA L CANNON
No. C 69168
06/30/15
PROFESSIONAL ENGINEER
STATE OF OREGON

APPROVED BY: Alicia L Cannon
ALICIA L CANNON
PROJECT MANAGER
APRIL 14, 2015
DATE

DESIGNED BY	DRAWN BY	CHECKED BY
CO	KF	AC

PROFILE

CLINTON KEITH ROAD
FROM
WHITEWOOD ROAD TO LEON ROAD

SHEET
18 of 191

PROJECT No. B2-0472
ARCHIVE No.
962-W

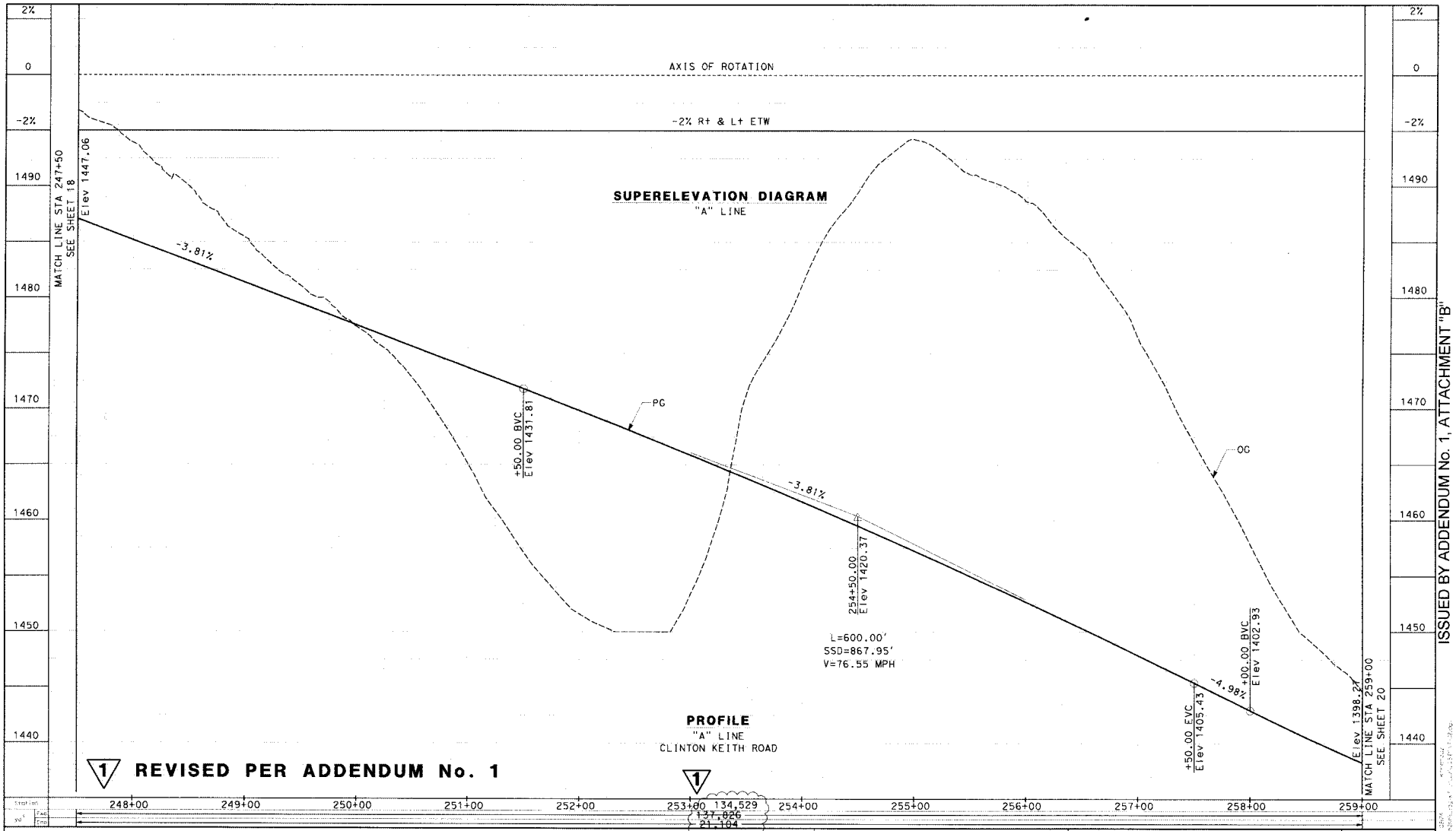

Don't Dig... Until You Call U.S.A. Toll Free 800-227-2600 for the location of buried utility lines. Don't disrupt vital services. TWO WORKING DAYS BEFORE YOU DIG

SCALES: 1" = 40' HOR
1" = 4' VER

CH2MHILL ENGINEERING COMPANY	PROFILE	SHEET
APPROVED BY: ALICIA L CANNON PROJECT MANAGER — APRIL 14, 2015 DATE	CLINTON KEITH ROAD FROM WHITEWOOD ROAD TO LEON ROAD	19 of 191
DESIGNED BY CO · DRAWN BY KF · CHECKED BY AC		

PROJECT No. B2-0472 ARCHIVE No. 962-W

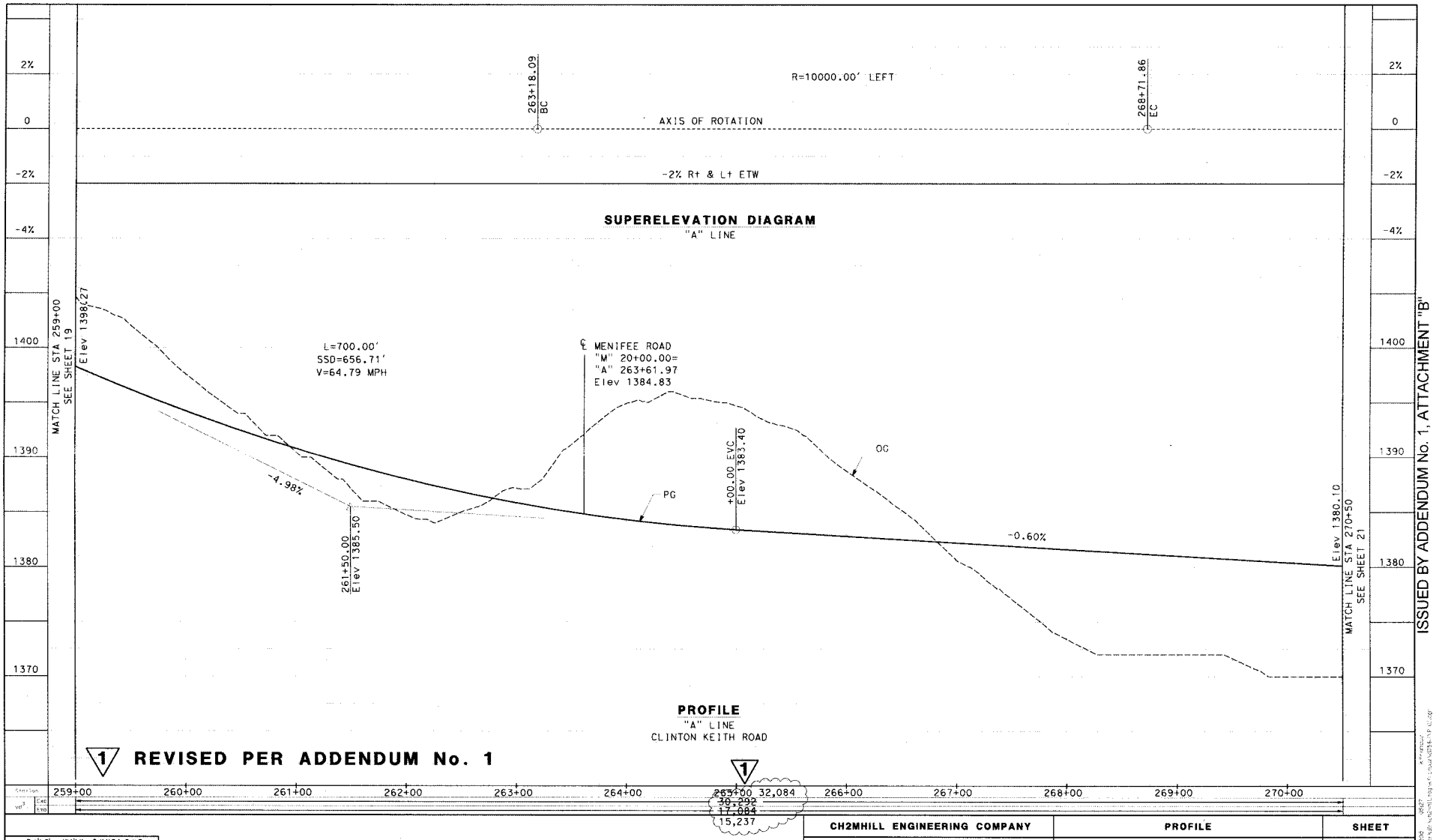

Don't Dig... Until You Call U.S.A. Toll Free 800-227-2600 for the location of buried utility lines. Don't disrupt vital services.

TWO WORKING DAYS BEFORE YOU DIG

SCALES: 1" = 40' HOR
1" = 4' VER

CH2MHILL ENGINEERING COMPANY

APPROVED BY: ALICIA L CANNON APRIL 14, 2015
ALICIA L CANNON DATE
PROJECT MANAGER

DESIGNED BY	DRAWN BY	CHECKED BY
CO	KF	AC

PROFILE

CLINTON KEITH ROAD
FROM
WHITEWOOD ROAD TO LEON ROAD

SHEET 20 of 191

PROJECT No. B2-0472 ARCHIVE No. **962-W**

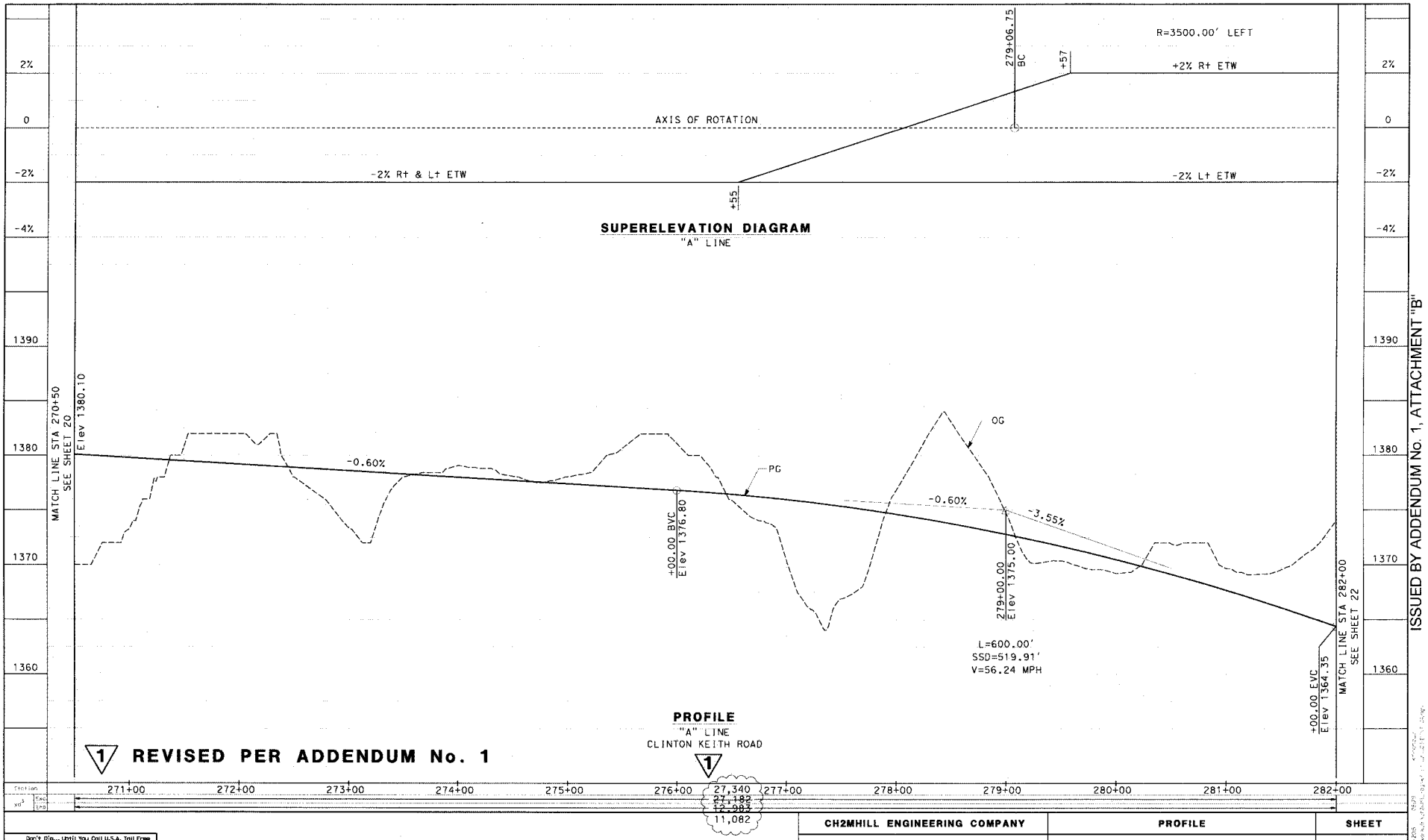

Don't Dig... Until You Call U.S.A. Toll Free 800-227-2600 for the location of buried utility lines. Don't disrupt vital services.

BURIED CABLE

TWO WORKING DAYS BEFORE YOU DIG

40 0 40 80 120

SCALES: 1" = 40' HOR
1" = 4' VER

CH2MHILL ENGINEERING COMPANY	PROFILE	SHEET
APPROVED BY: Alicia L Cannon APRIL 14, 2015 ALICIA L CANNON PROJECT MANAGER DATE	CLINTON KEITH ROAD FROM WHITEWOOD ROAD TO LEON ROAD	21 of 191

ALICIA L CANNON No. C 69168 06/30/16 STATE OF FLORIDA

DESIGNED BY	DRAWN BY	CHECKED BY
CO	KF	AC

PROJECT No. B2-0472 ARCHIVE No. 962-W

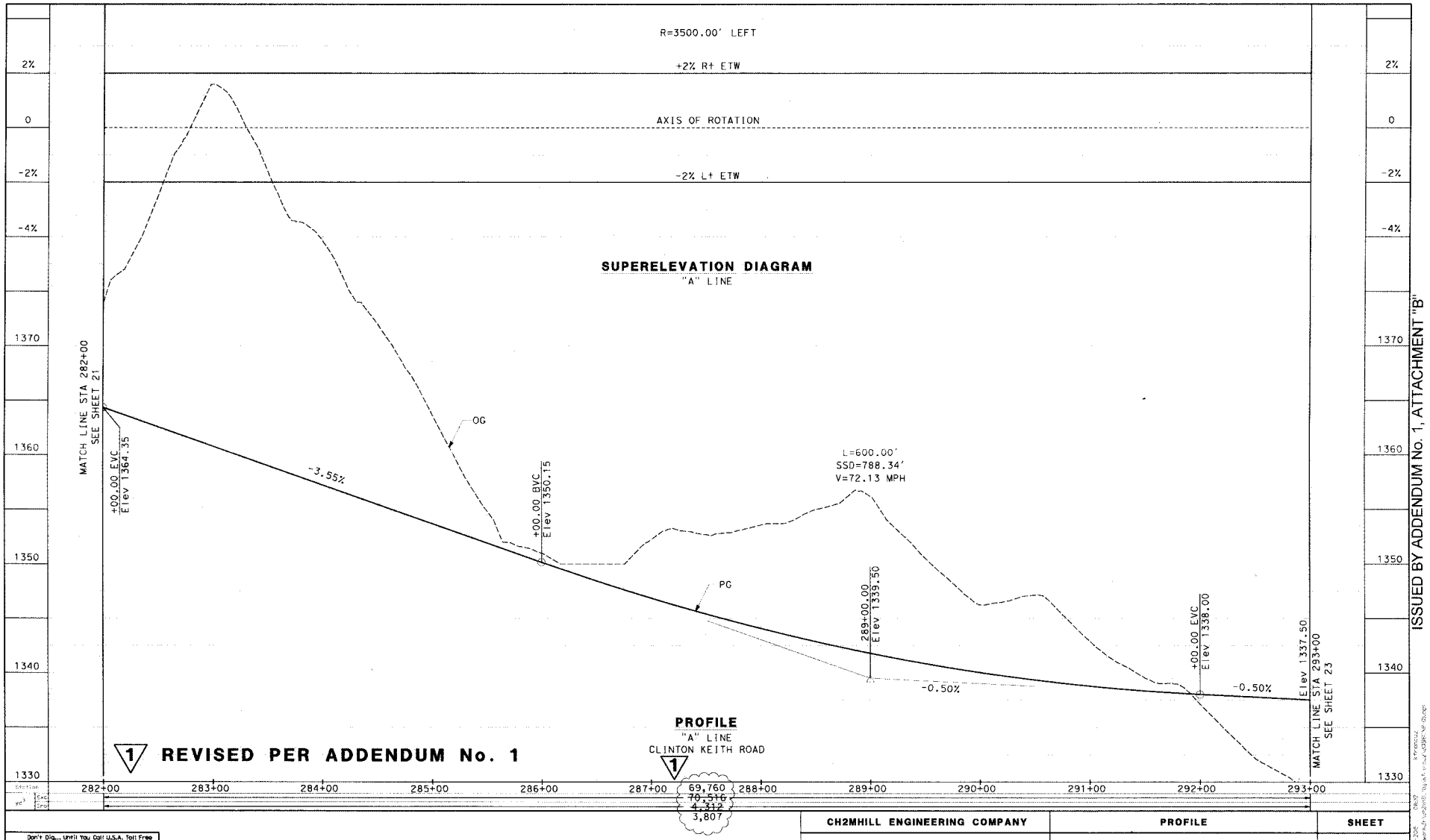

Don't Dig... Until You Call U.S.A. Toll Free 800-227-2600 for the location of buried utility lines. Don't disrupt vital services.

TWO WORKING DAYS BEFORE YOU DIG

SCALES: 1" = 40' HOR
1" = 4' VER

CH2MHILL ENGINEERING COMPANY	PROFILE	SHEET
APPROVED BY: ALICIA L CANNON, PROJECT MANAGER — APRIL 14, 2015 DATE	**CLINTON KEITH ROAD** FROM WHITEWOOD ROAD TO LEON ROAD	22 of 191
DESIGNED BY CO · DRAWN BY KF · CHECKED BY AC		

PROJECT No. B2-0472 ARCHIVE No. **962-W**

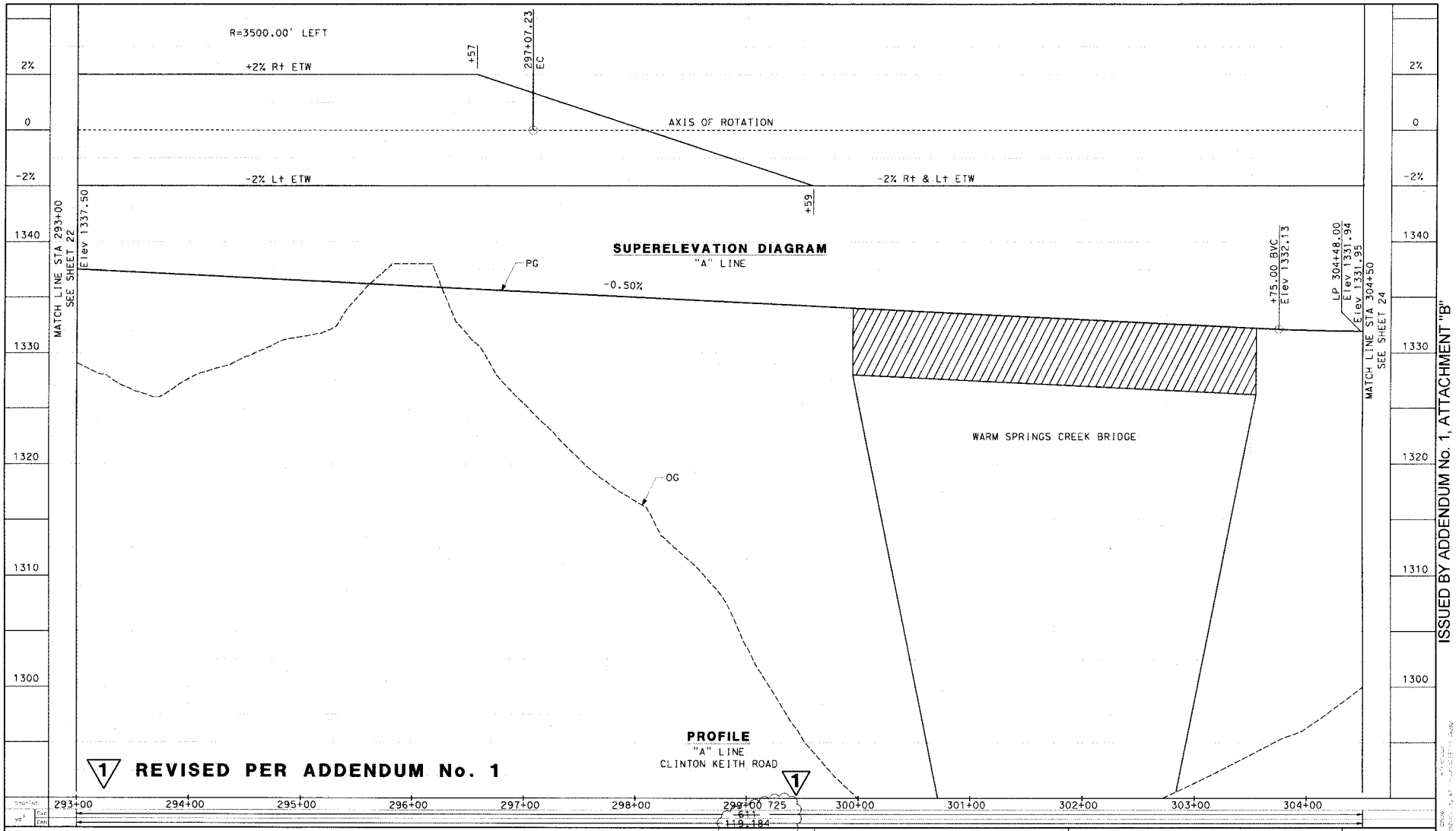

Don't Dig... Until You Call U.S.A. Toll Free 800-227-2600 for the location of buried utility lines. Don't disrupt vital services. BURIED CABLE 1 TWO WORKING DAYS BEFORE YOU DIG

SCALES: 1" = 40' HOR
1" = 4' VER

CH2MHILL ENGINEERING COMPANY

APPROVED BY: Alicia L Cannon APRIL 14, 2015
ALICIA L CANNON DATE
PROJECT MANAGER

DESIGNED BY	DRAWN BY	CHECKED BY
CO	KF	AC

PROFILE

CLINTON KEITH ROAD
FROM
WHITEWOOD ROAD TO LEON ROAD

SHEET 23 OF 191

PROJECT No. B2-0472 ARCHIVE No. **962-W**

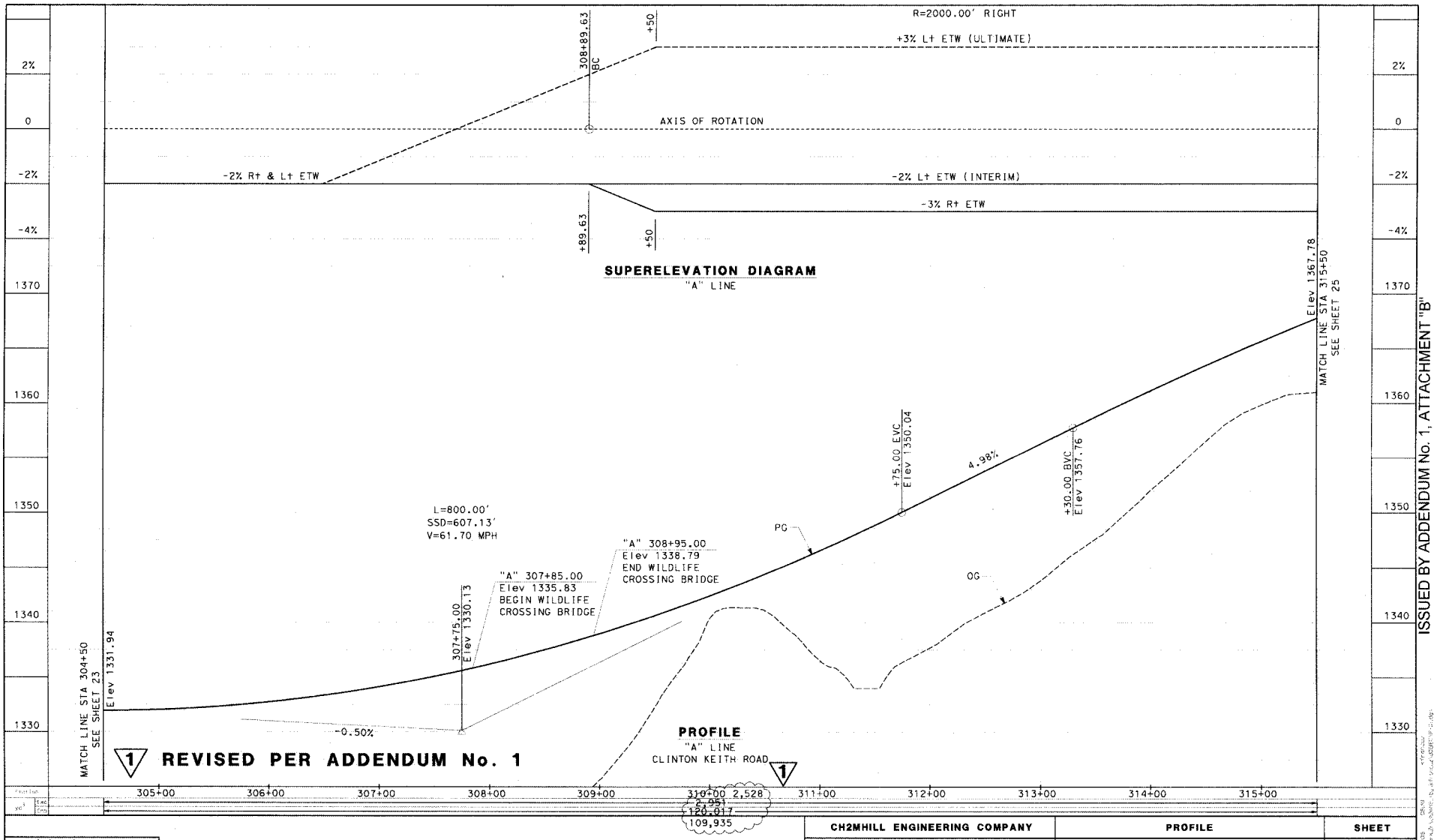

ISSUED BY ADDENDUM No. 1, ATTACHMENT "B"

Don't Dig... Until You Call U.S.A. Toll Free 800-227-2600 for the location of buried utility lines. Don't disrupt vital services.

BUREAU OF UTILITIES

48 WORKING DAYS BEFORE YOU DIG

SCALES: 1" = 40' HOR
1" = 4' VER

CH2MHILL ENGINEERING COMPANY	PROFILE	SHEET
APPROVED BY: ALICIA L CANNON, PROJECT MANAGER — APRIL 14, 2015 DATE	CLINTON KEITH ROAD FROM WHITEWOOD ROAD TO LEON ROAD	24 of 191

DESIGNED BY CG | DRAWN BY KF | CHECKED BY AC

PROJECT No. B2-0472 ARCHIVE No. 962-W

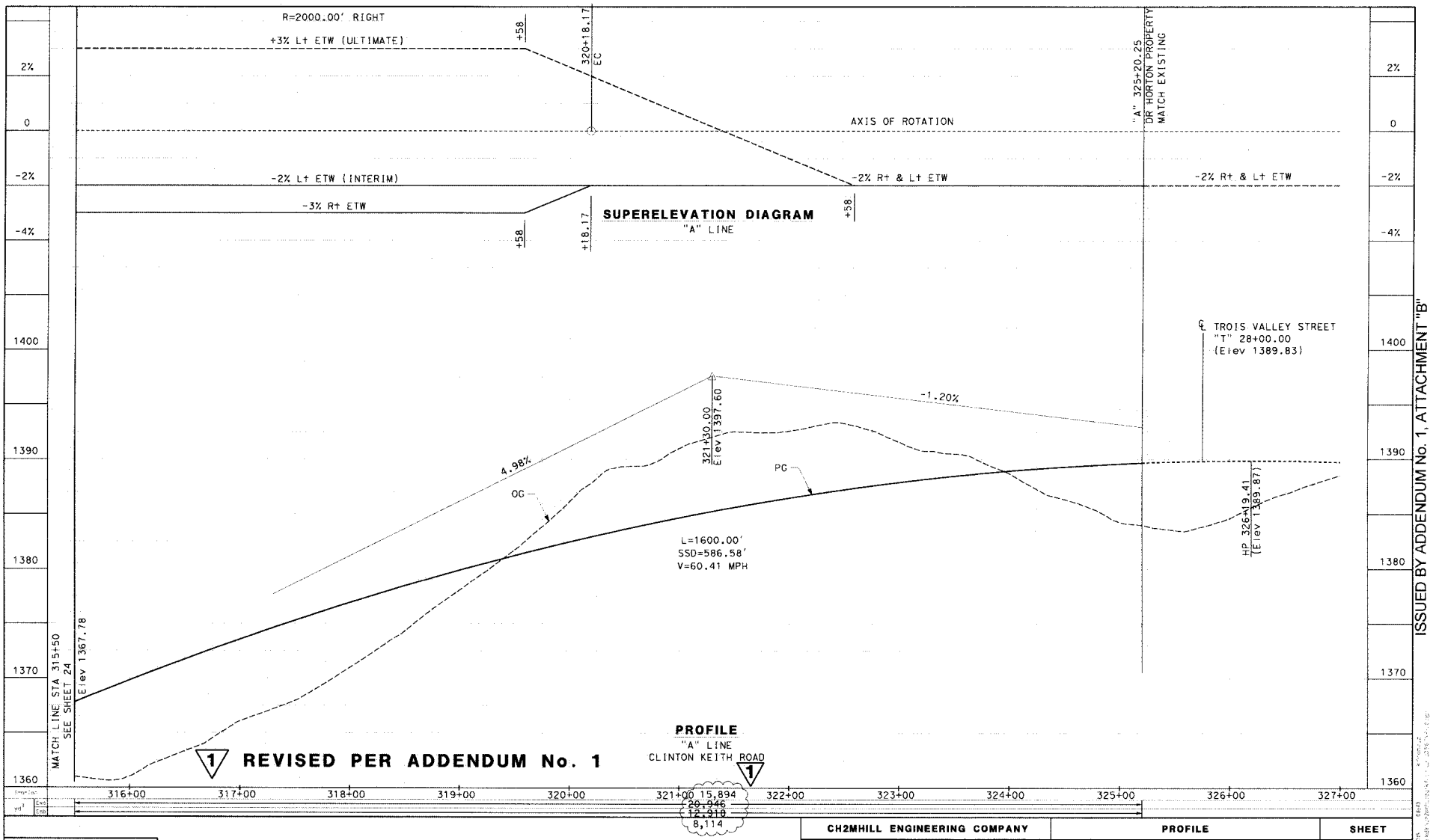

Don't Dig... Until You Call U.S.A. Toll Free
800-227-2600
for the location of buried utility lines.
Don't disrupt vital services.
TWO WORKING DAYS BEFORE YOU DIG

SCALES: 1" = 40' HOR
1" = 4' VER

CH2MHILL ENGINEERING COMPANY

APPROVED BY: Alicia L Cannon APRIL 14, 2015
ALICIA L CANNON DATE
PROJECT MANAGER

DESIGNED BY	DRAWN BY	CHECKED BY
CO	KT	AC

PROFILE

CLINTON KEITH ROAD
FROM
WHITEWOOD ROAD TO LEON ROAD

SHEET
25 of 191

PROJECT No. B2-0472 ARCHIVE No. **962-W**

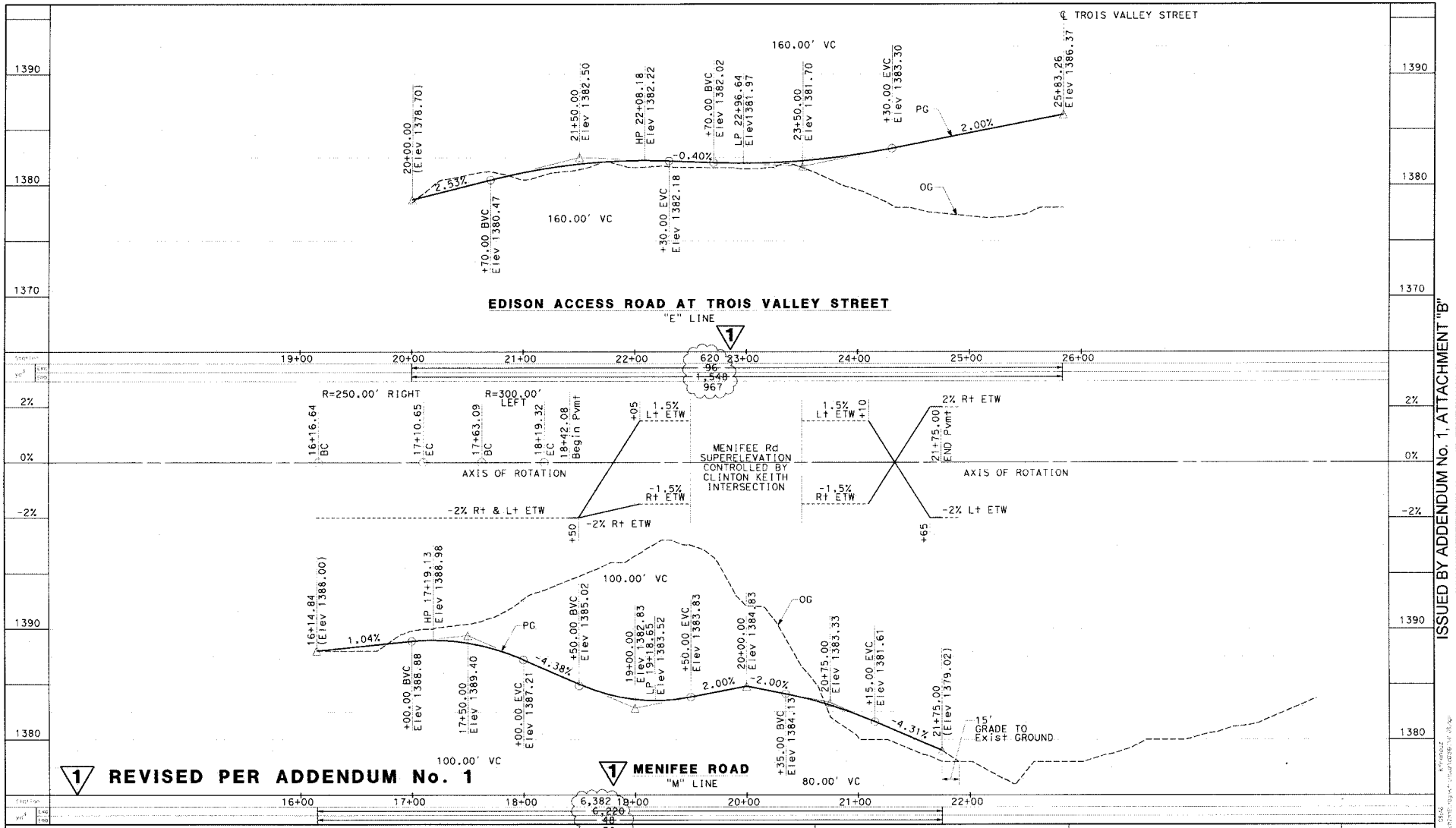

REVISED PER ADDENDUM No. 1

Don't Dig... Until You Call U.S.A. Toll Free 800-227-2600 for the location of buried utility lines. Don't disrupt vital services. 48 WORKING DAYS BEFORE YOU DIG

SCALES: 1" = 40' HOR
1" = 4' VER

CH2MHILL ENGINEERING COMPANY	PROFILE	SHEET
APPROVED BY: Alicia L Cannon APRIL 14, 2015 ALICIA L CANNON PROJECT MANAGER DATE	CLINTON KEITH ROAD FROM WHITEWOOD ROAD TO LEON ROAD	26 of 191
DESIGNED BY CG · DRAWN BY KF · CHECKED BY AC		

PROJECT No. B2-0472 ARCHIVE No. 962-W

ISSUED BY ADDENDUM No. 1, ATTACHMENT "B"

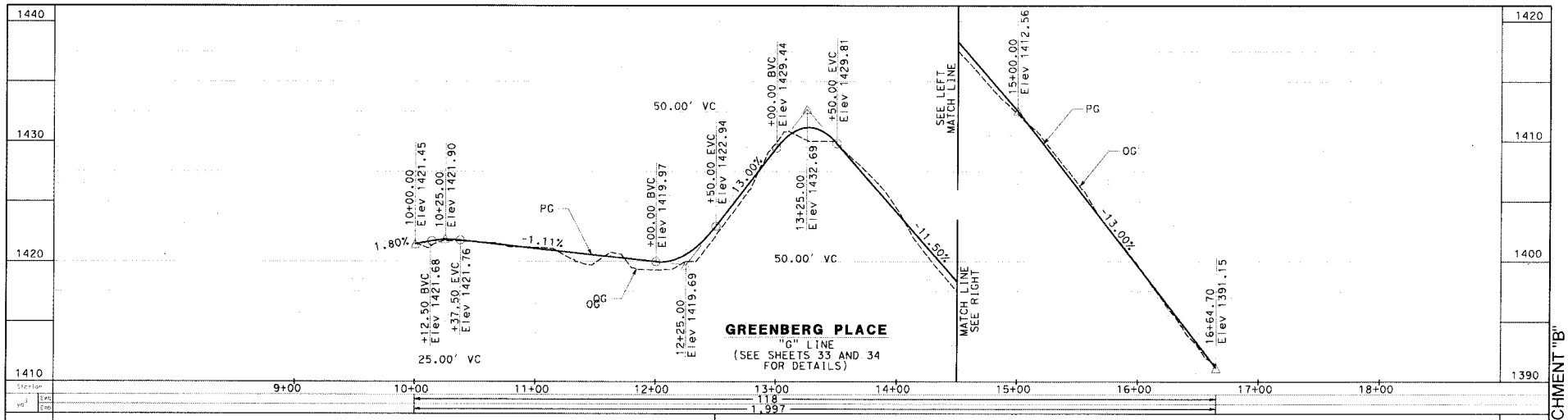

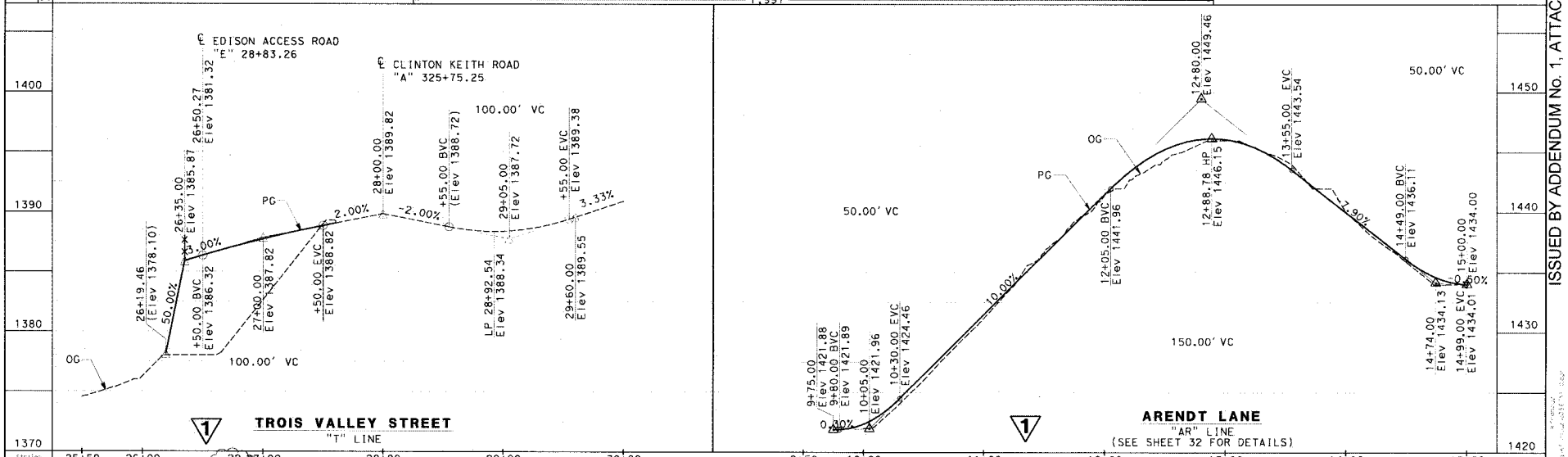

Don't Dig... Until You Call U.S.A. Toll Free 800-227-2600 for the location of buried utility lines. Don't disrupt vital services.

BURIED CABLE

TWO WORKING DAYS BEFORE YOU DIG

REVISED PER ADDENDUM No. 1

SCALES: 1" = 40' HOR
1" = 4' VER

CH2MHILL ENGINEERING COMPANY

APPROVED BY: ALICIA L CANNON PROJECT MANAGER — APRIL 14, 2015 DATE

ALICIA L CANNON C 69168 06/30/15 REGISTERED PROFESSIONAL ENGINEER STATE OF CALIFORNIA

DESIGNED BY	DRAWN BY	CHECKED BY
CO	CF	AC

PROFILE

CLINTON KEITH ROAD
FROM
WHITEWOOD ROAD TO LEON ROAD

SHEET 27 OF 191

PROJECT No. B2-0472 ARCHIVE No. **962-W**

ISSUED BY ADDENDUM No. 1, ATTACHMENT "B"

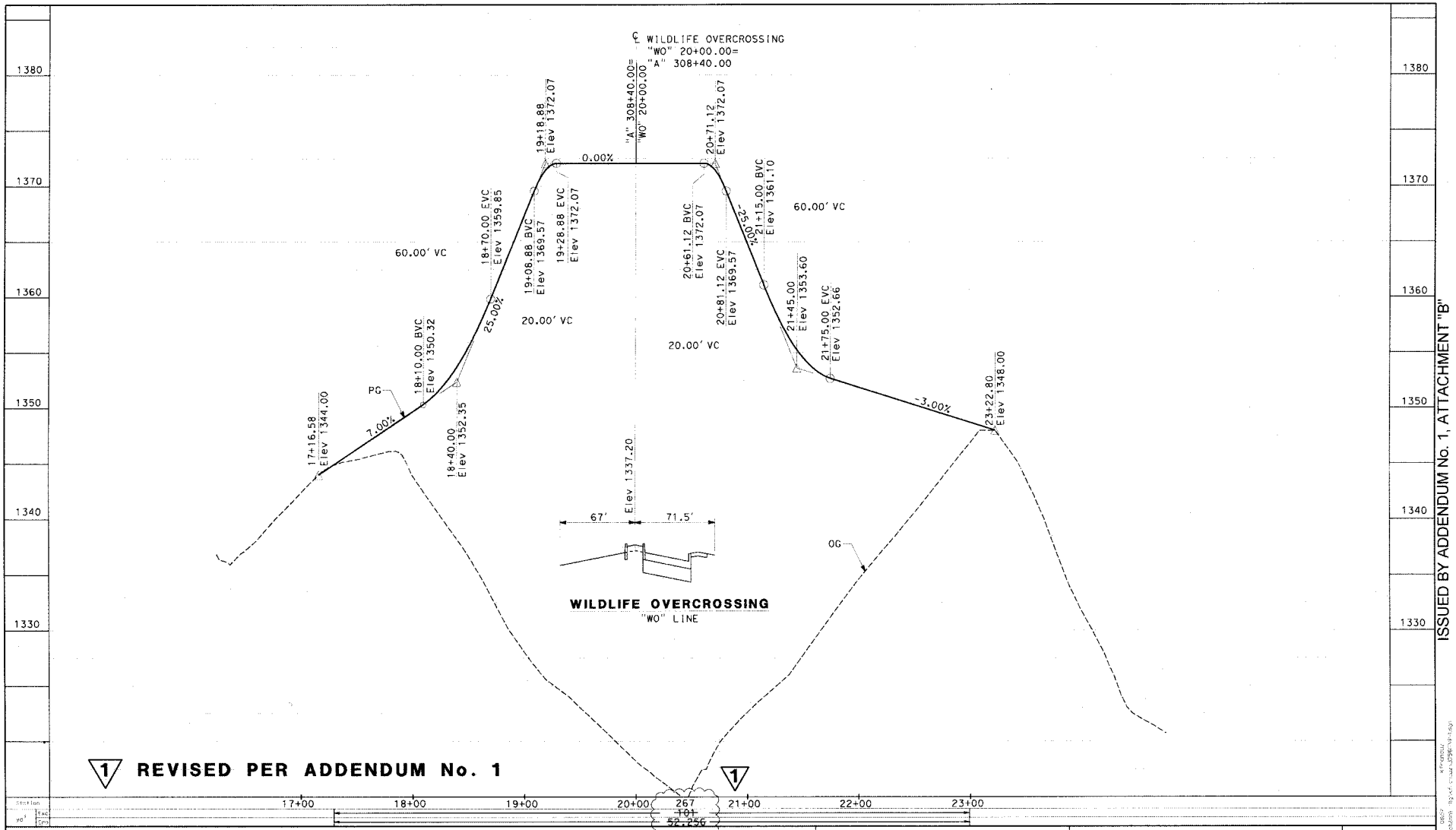
℄ WILDLIFE OVERCROSSING
"WO" 20+00.00=
"A" 308+40.00
"A" 308+40.00=
"WO" 20+00.00
0.00%
19+18.88
Elev 1372.07
20+71.12
Elev 1372.07
60.00' VC
18+70.00 EVC
Elev 1359.85
19+06.88 BVC
Elev 1369.57
19+28.88 EVC
Elev 1372.07
20+61.12 BVC
Elev 1372.07
20+81.12 EVC
Elev 1369.57
21+15.00 BVC
Elev 1361.10
60.00' VC
21+45.00
Elev 1353.60
21+75.00 EVC
Elev 1352.66
25.00%
20.00' VC
20.00' VC
18+10.00 BVC
Elev 1350.32
PG
7.00%
17+16.58
Elev 1344.00
18+40.00
Elev 1352.35
-3.00%
23+22.80
Elev 1348.00
Elev 1337.20
67'
71.5'
OG
WILDLIFE OVERCROSSING
"WO" LINE
1380
1370
1360
1350
1340
1330
REVISED PER ADDENDUM No. 1
17+00
18+00
19+00
20+00
21+00
22+00
23+00
267
101
52,256
49,244
Don't Dig... Until You Call U.S.A. Toll Free
800-227-2600
for the location of buried utility lines.
Don't disrupt vital services.
TWO WORKING DAYS BEFORE YOU DIG
SCALES: 1" = 40' HOR
1" = 4' VER
CH2MHILL ENGINEERING COMPANY
APPROVED BY:
ALICIA L CANNON
PROJECT MANAGER
APRIL 14, 2015
DATE
DESIGNED BY CO
DRAWN BY KF
CHECKED BY AC
PROFILE
CLINTON KEITH ROAD
FROM
WHITEWOOD ROAD TO LEON ROAD
SHEET
28 of 191
PROJECT No. B2-0472
ARCHIVE No. 962-W
ISSUED BY ADDENDUM No. 1, ATTACHMENT "B"

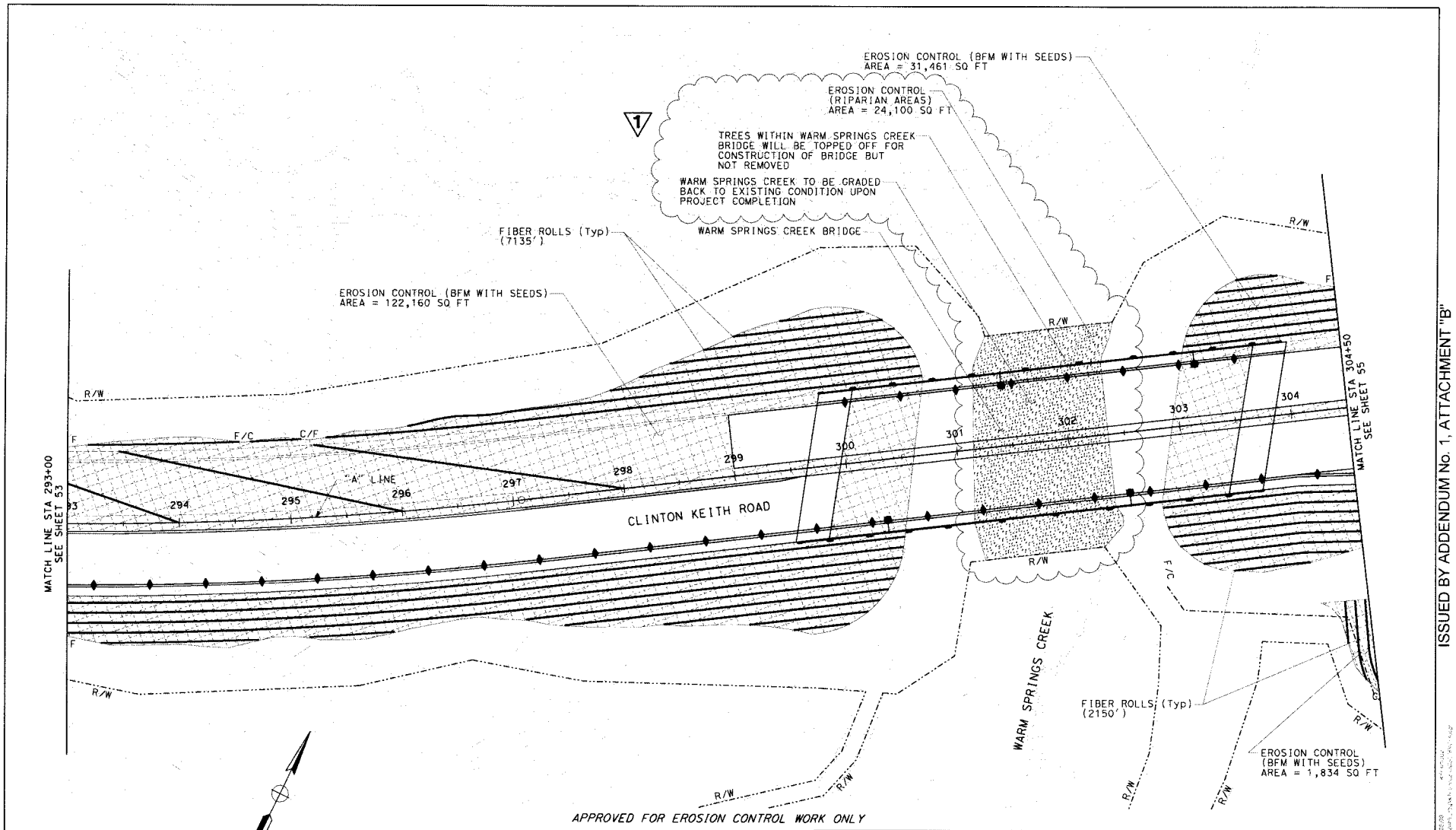

1 REVISED PER ADDENDUM No. 1

SCALE: 1" = 40' HOR

Don't Dig... Until You Call U.S.A. Toll Free 800-227-2600 for the location of buried utility lines. Don't disrupt vital services. TWO WORKING DAYS BEFORE YOU DIG

CH2MHILL ENGINEERING COMPANY	EROSION CONTROL	SHEET
APPROVED BY: Alicia L Cannon APRIL 14, 2015 ALICIA L CANNON DATE PROJECT MANAGER	CLINTON KEITH ROAD FROM WHITEWOOD ROAD TO LEON ROAD	54 of 191
DESIGNED BY CO / DRAWN BY KF / CHECKED BY AC		

PROJECT No. B2-0472 ARCHIVE No. 962-W

ISSUED BY ADDENDUM No. 1, ATTACHMENT "B"

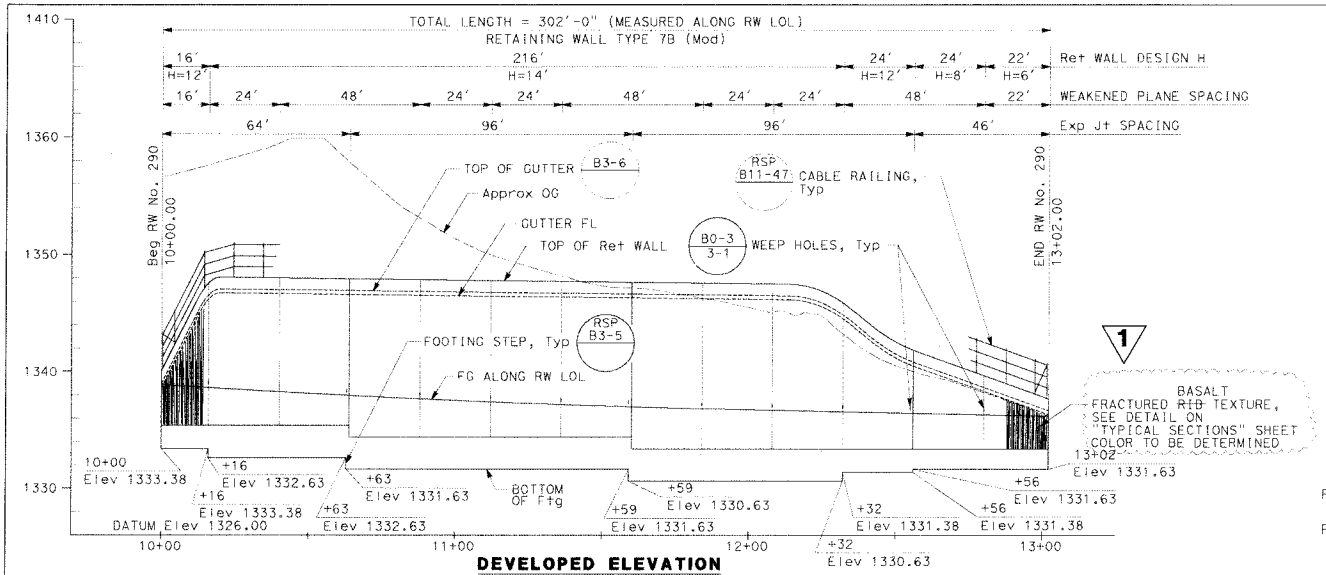

DEVELOPED ELEVATION

SCALE: 1"=20' HORIZ
1"=5' VERT

INDEX TO PLANS

RETAINING WALL NO. 290 GENERAL PLAN
RETAINING WALL NO. 290 TYPICAL SECTIONS
RETAINING WALL NO. 290 TYPE 7B (MODIFIED) DETAILS NO. 1
RETAINING WALL NO. 290 TYPE 7B (MODIFIED) DETAILS NO. 2

CALTRANS STANDARD PLANS (DATED 2010)

A10A	ABBREVIATIONS (SHEET 1 OF 2)
A10B	ABBREVIATIONS (SHEET 2 OF 2)
A10C	LINES AND SYMBOLS (SHEET 1 OF 3)
A10D	LINES AND SYMBOLS (SHEET 2 OF 3)
A10E	LINES AND SYMBOLS (SHEET 3 OF 3)
A10F	LEGEND-SOIL (SHEET 1 OF 2)
A10G	LEGEND-SOIL (SHEET 2 OF 2)
B0-3	BRIDGE DETAILS
RSP B3-5	RETAINING WALL DETAILS NO. 1
B3-6	RETAINING WALL DETAILS NO. 2
RSP B11-47	CABLE RAILING

STANDARD PLAN SHEET NO.
DETAIL NO.

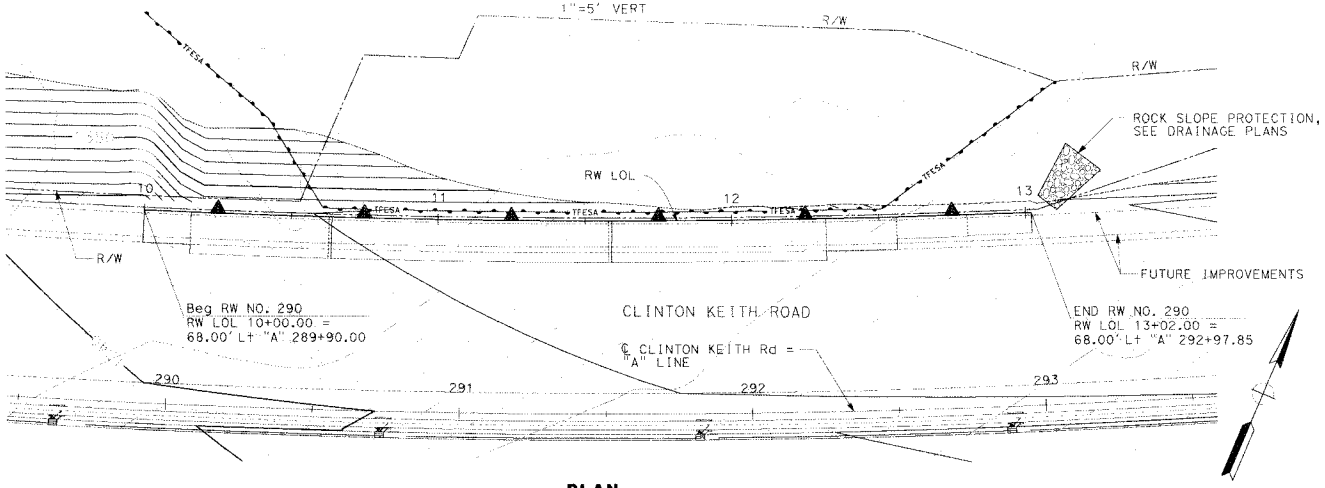

PLAN

SCALE 1"=20'

NOTES:

1. CONTRACTOR TO FIELD VERIFY LOCATIONS OF EXISTING ARCHAEOLOGICAL FEATURES PRIOR TO RETAINING WALL CONSTRUCTION.
2. FOR CONSTRUCTION REQUIREMENTS AT EXISTING ARCHAEOLOGICAL FEATURES, REFER TO PROJECT SPECIFICATIONS.
3. FOR TYPICAL SECTIONS, SEE "TYPICAL SECTION" SHEET.
4. FOR REINFORCEMENT DETAILS, SEE "TYPE 7B (MODIFIED) DETAILS NO. 1" AND "TYPE 7B (MODIFIED) DETAILS NO. 2" SHEETS.
5. FOR WALL DRAINAGE DETAILS, SEE "TYPE 7B (MODIFIED) DETAILS NO. 2" SHEET.

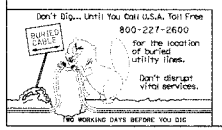

1 REVISED PER ADDENDUM No. 1

APPROVED FOR RETAINING WALL WORK ONLY

CH2MHILL ENGINEERING COMPANY	RETAINING WALL NO. 290 GENERAL PLAN	SHEET
APPROVED BY: JOHN POWELL APRIL 14, 2015 DATE	**CLINTON KEITH ROAD** FROM WHITEWOOD ROAD TO LEON ROAD	115 of 191
DESIGNED BY JP / DRAWN BY NM / CHECKED BY HS		

PROJECT No. B2-0472 ARCHIVE No. **962-W**

ISSUED BY ADDENDUM No. 1, ATTACHMENT "B"

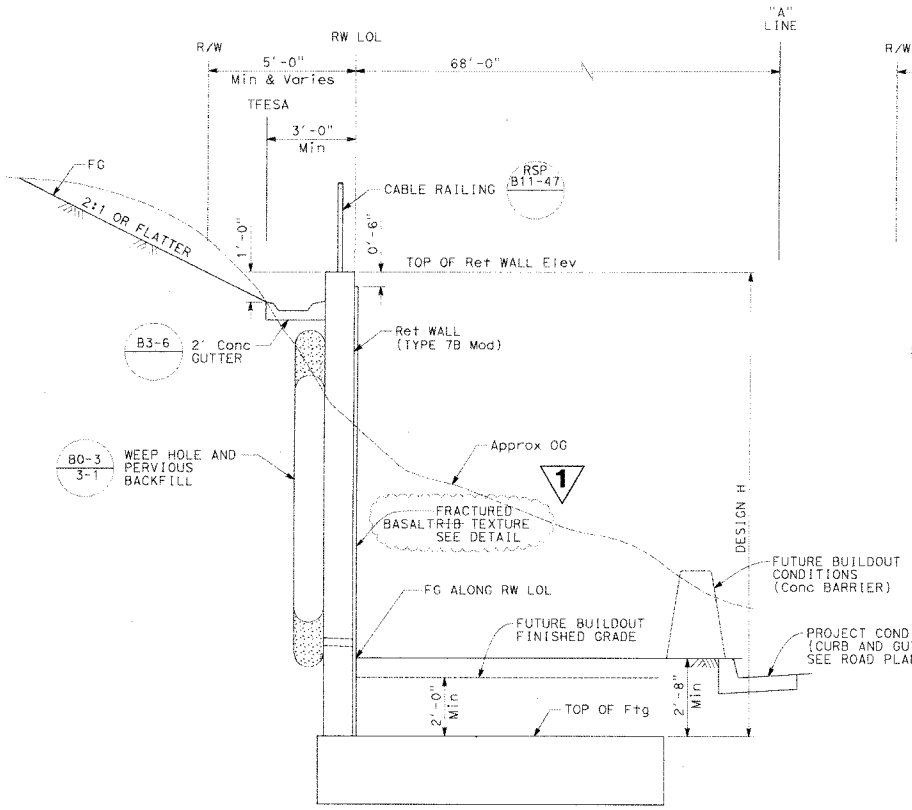

TYPICAL SECTION
(STA 10+00 TO 11+60)
SCALE 1/2" = 1'-0"

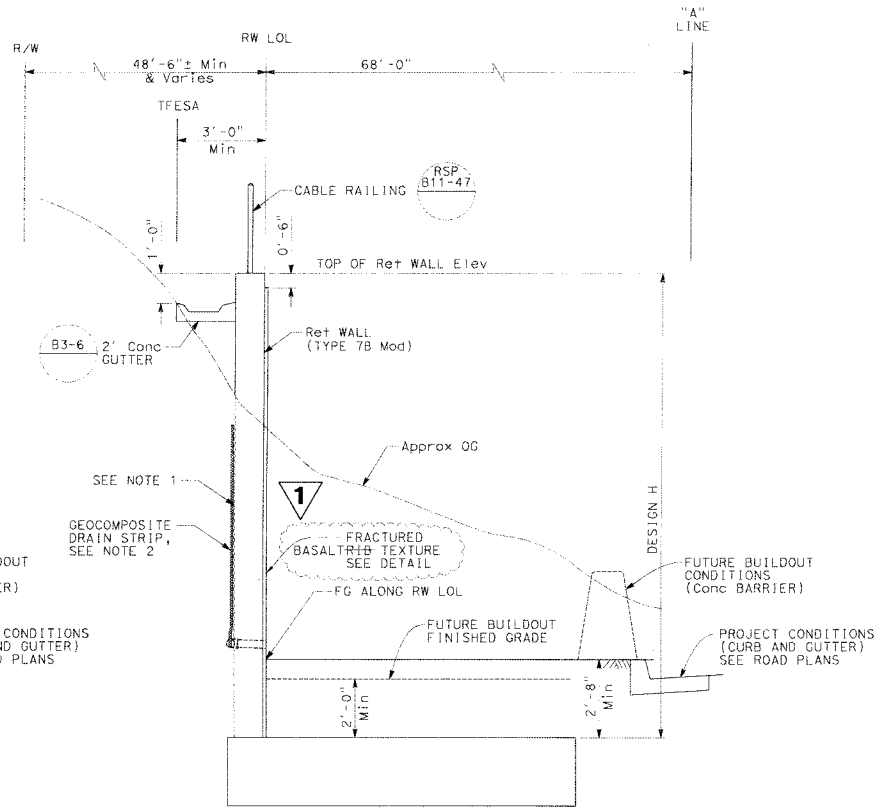

TYPICAL SECTION
(STA 11+60 TO 13+02)
SCALE 1/2" = 1'-0"

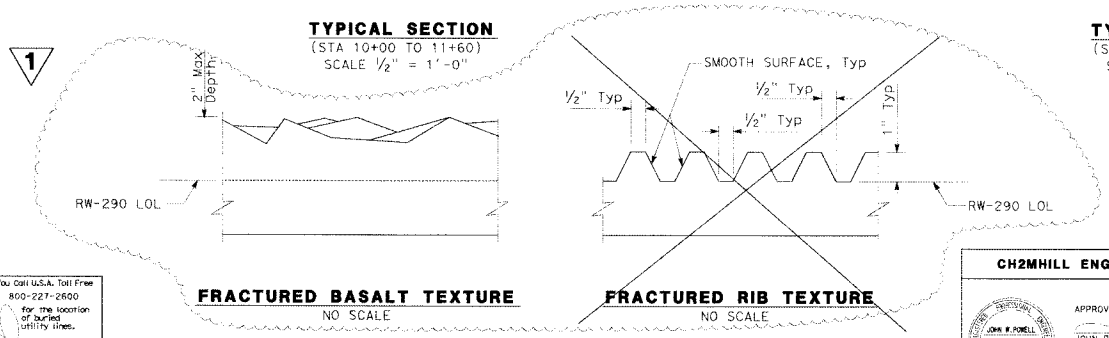

FRACTURED BASALT TEXTURE
NO SCALE

FRACTURED RIB TEXTURE
NO SCALE

NOTES:

1. CAST NEAT AGAINST EXCAVATION, OR BACKFILL WITH CEMENT SLURRY BACKFILL.
2. FOR ADDITIONAL WALL DRAINAGE DETAILS, SEE "TYPE 7B (MODIFIED) DETAILS NO. 2" SHEET.

1 **REVISED PER ADDENDUM No. 1**

APPROVED FOR RETAINING WALL WORK ONLY

CH2MHILL ENGINEERING COMPANY	RETAINING WALL NO. 290 TYPICAL SECTIONS	SHEET
JOHN W. POWELL No. C 71463 Exp. 12/31/15 STATE OF OREGON — APPROVED BY: JOHN POWELL APRIL 14, 2015 DATE	**CLINTON KEITH ROAD** FROM WHITEWOOD ROAD TO LEON ROAD	116 of 191
DESIGNED BY JP · DRAWN BY NM · CHECKED BY HS		

PROJECT No. B2-0472 ARCHIVE No. **962-W**

ISSUED BY ADDENDUM No. 1, ATTACHMENT "B"

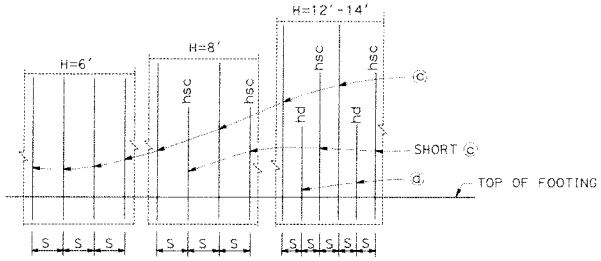

ELEVATION
NO SCALE

NOTE:

"hsc" and "hd" above bars indicate distance from top of footing to upper end of the bars, see table.

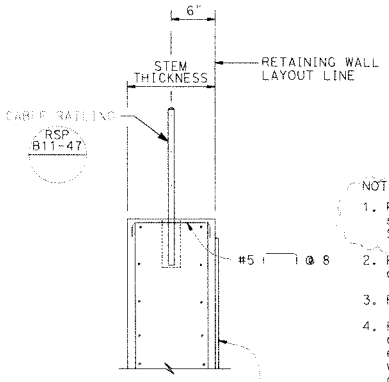

DETAIL A
3/4 = 1'-0"

1

NOTES:

1. For Fractured ~~Rib~~ BASALT Texture, see detail on "TYPICAL SECTIONS" SHEET.
2. For Details not shown and Drainage Notes see 3-5
3. Footing cover, 2'-0" minimum.
4. Provide #6 @ 12" X 16'-0" ⓐ bar over a distance of 8'-0" measured from all expansion joints begin wall and end wall locations. Hook ⓐ bar into footing and reduce bar length as needed to maintain Min Clr cover.
5. See "Table of Wall Dimensions, Reinforcing Steel and Bearing Stress Data" on "TYPE 7B (MODIFIED) DETAIL NO. 1" sheet.

1 FRACTURED ~~RIB~~ BASALT TEXTURE, SEE NOTE 1

DESIGN DATA

Design: AASHTO LRFD Bridge Design Specifications, 4th edition with California Amendments

EQE: Mononabe-Okabe Method
K_h = 0.2
K_v = 0.0
K_{AE} = 0.64
K_E = 0.36

Soil: $\emptyset$ = 40°
γ = 120 pcf

Reinforced Concrete: f'c = 3600 psi
fy = 60,000 psi

Load Combinations and Limit States

Service I Q=1.00DC+1.00EV+1.00EH

Strength I Q=αDC+βEV+1.50EH

Extreme 1 Q=1.00DC+1.00EV+1.00EH+1.00EQD+1.00EQE

Where:
Q: Force Effects
α: 1.25 or 0.90, which ever controls design
β: 1.35 or 1.00, which ever controls design
DC: Dead Load of Structure Components
EV: Vertical Earth Fill Pressure
EQE: Seismic Earth Pressure
EQD: Soil and Structure Components Inertia. Soil inertia ignored for stem design
EH: Lateral Earth Pressure

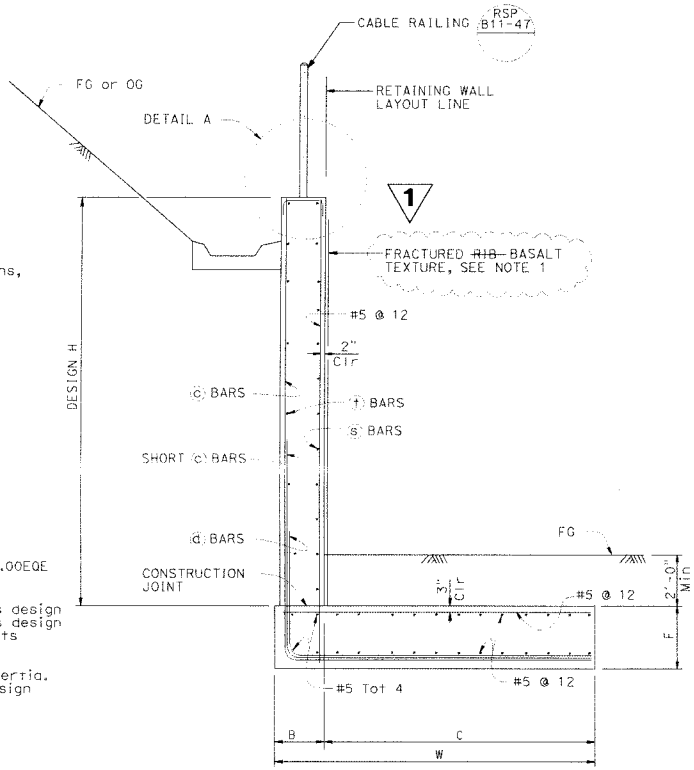

SPREAD FOOTING SECTION
NO SCALE

Don't Dig... Until You Call U.S.A. Toll Free 800-227-2600 for the location of buried utility lines. Don't disrupt vital services.
2 WORKING DAYS BEFORE YOU DIG

1 **REVISED PER ADDENDUM No. 1**

APPROVED FOR RETAINING WALL WORK ONLY

CH2MHILL ENGINEERING COMPANY	RETAINING WALL NO. 290 TYPE 7B (MODIFIED) DETAIL NO. 1	SHEET
APPROVED BY: JOHN ROWELL, APRIL 14, 2015	**CLINTON KEITH ROAD** FROM WHITEWOOD ROAD TO LEON ROAD	117 of 191
DESIGNED BY JP / DRAWN BY NM / CHECKED BY HS	PROJECT No. B2-0472 ARCHIVE No. **962-W**	

ISSUED BY ADDENDUM No. 1, ATTACHMENT "B"

TABLE OF WALL DIMENSIONS, REINFORCING STEEL AND BEARING STRESS DATA				
DESIGN H	6'	8'	12'	14'
W	8'-3"	8'-9"	13'-0"	16'-0"
C	7'-0"	7'-6"	11'-2"	14'-2"
B	1'-3"	1'-3"	1'-10"	1'-10"
F	1'-9"	1'-9"	2'-0"	2'-9"
STEM THICKNESS	1'-0"	1'-0"	1'-7"	1'-7"
BATTER	0	0	0	0
S	0'-9"	0'-9"	0'-6"	0'-6"
ⓒ BARS	#6	#6	#6	#7
hsc	N/A	7'-10"	11'-10"	13'-10"
ⓓ BARS	N/A	N/A	#6	#7
hd	N/A	N/A	3'-3"	5'-6"
ⓢ BARS	#4 @ 12	#4 @ 12	#5 @ 12	#5 @ 12
ⓣ BARS	#4 @ 12	#4 @ 12	#4 @ 12	#4 @ 12
SER I: B'(ft), q_0(ksf)	8.2, 0.6	8.4, 0.7	13.0, 0.8	15.6, 0.9
STR Ia: B'(ft), q_0(ksf)	8.1, 0.8	8.1, 0.9	12.4, 1.0	14.8, 1.2
STR, Ib: B'(ft), q_0(ksf)	7.6, 0.6	7.2, 0.7	11.0, 0.8	13.1, 1.0
Ext I: B'(ft), q_0(ksf)	5.1, 1.0	3.2, 1.7	4.4, 2.2	5.4, 2.6

LEGEND:
SER: service limit state
STR: strength limit state
EXT: extreme event limit state
B': effective footing width (ft)
q_0: gross uniform bearing stress (ksf)

RETAINING WALL ELEVATIONS	
RW LOL STA	TOP OF WALL ELEV
10+00	1340.06
10+16	1347.56
10+25	1348.03
10+50	1347.96
10+64	1347.92
10+75	1347.88
11+00	1347.81
11+25	1347.73
11+50	1347.66
11+60	1347.63
11+75	1347.58
12+00	1347.51
12+25	1346.85
12+32	1345.85
12+50	1342.61
12+75	1340.10
12+80	1339.64
13+00	1337.85
13+02	1337.67

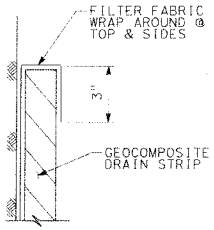

DETAIL B
NO SCALE

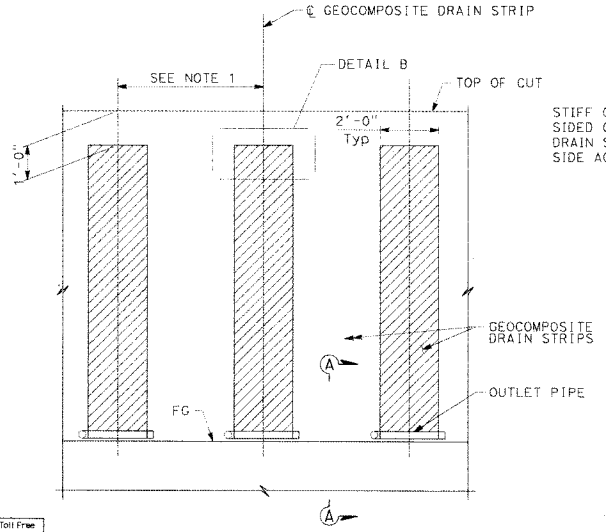

WALL PARTIAL ELEVATION
NO SCALE

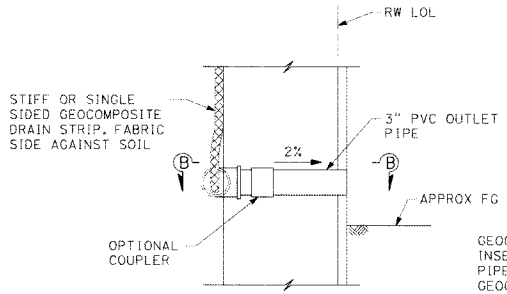

WALL DRAIN DETAIL AT WEEPHOLE
SECTION A-A
NO SCALE

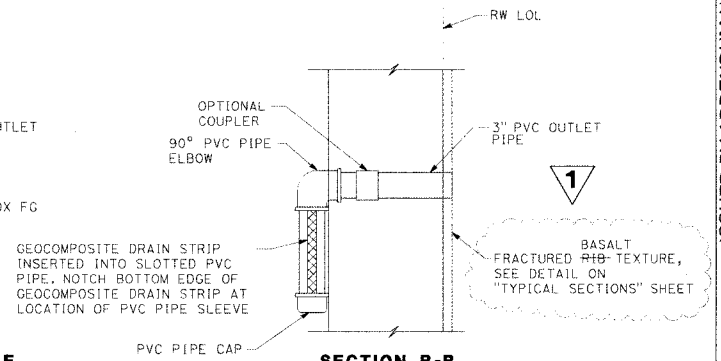

SECTION B-B
NO SCALE

NOTE:
1. SPACE GEOCOMPOSITE DRAIN STRIPS SAME AS WEEP HOLES.

1 **REVISED PER ADDENDUM No. 1**

APPROVED FOR RETAINING WALL WORK ONLY

CH2MHILL ENGINEERING COMPANY	RETAINING WALL NO. 290 TYPE 7B (MODIFIED) DETAIL NO. 2	SHEET
APPROVED BY: JOHN W. POWELL, No. C-71463, Exp. 12/31/15 — JOHN POWELL — APRIL 14, 2015 DATE	**CLINTON KEITH ROAD** FROM WHITEWOOD ROAD TO LEON ROAD	118 of 191
DESIGNED BY: JP; DRAWN BY: NM; CHECKED BY: HS		

PROJECT No. B2-0472 ARCHIVE No. **962-W**

ISSUED BY ADDENDUM No. 1, ATTACHMENT "B"

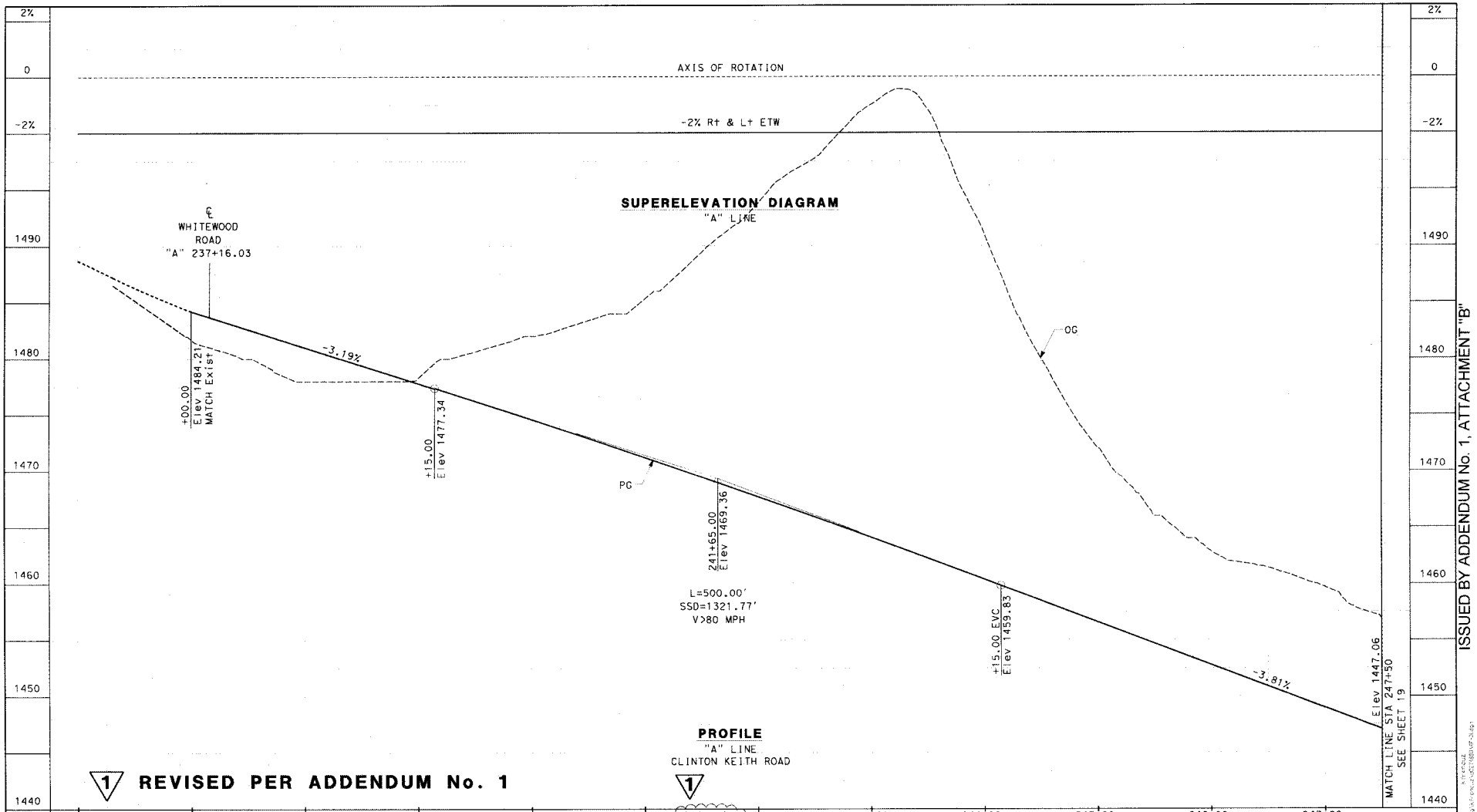

1 REVISED PER ADDENDUM No. 1

ISSUED BY ADDENDUM No. 1, ATTACHMENT "B"

Don't Dig... Until You Call U.S.A. Toll Free 800-227-2600 for the location of buried utility lines. Don't disrupt vital services. TWO WORKING DAYS BEFORE YOU DIG

SCALES: 1" = 40' HOR
1" = 4' VER

CH2MHILL ENGINEERING COMPANY

APPROVED BY: Alicia L Cannon APRIL 14, 2015
ALICIA L CANNON DATE
PROJECT MANAGER

DESIGNED BY	DRAWN BY	CHECKED BY
CG	KF	AC

PROFILE

CLINTON KEITH ROAD
FROM
WHITEWOOD ROAD TO LEON ROAD

SHEET 18 OF 195

PROJECT No. B2-0472 ARCHIVE No. **962-W**

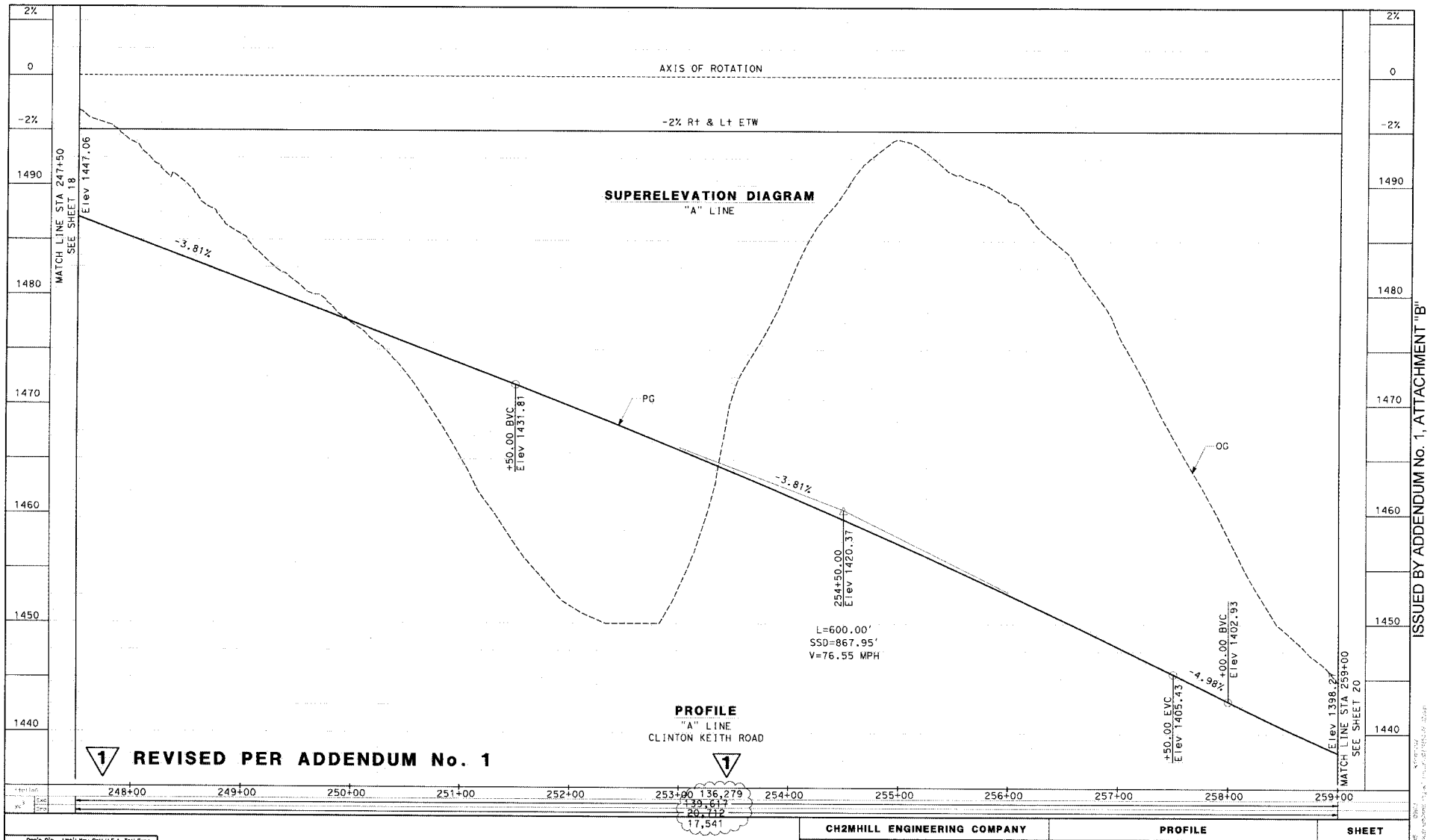

Don't Dig... Until You Call U.S.A. Toll Free
800-227-2600
for the location of buried utility lines.
Don't disrupt vital services.
TWO WORKING DAYS BEFORE YOU DIG

SCALES: 1" = 40' HOR
1" = 4' VER

CH2MHILL ENGINEERING COMPANY	PROFILE	SHEET
APPROVED BY: ALICIA L CANNON, PROJECT MANAGER — APRIL 14, 2015 DATE	CLINTON KEITH ROAD FROM WHITEWOOD ROAD TO LEON ROAD	19 of 195

DESIGNED BY CQ | DRAWN BY KF | CHECKED BY AC

PROJECT No. B2-0472 ARCHIVE No. 962-W

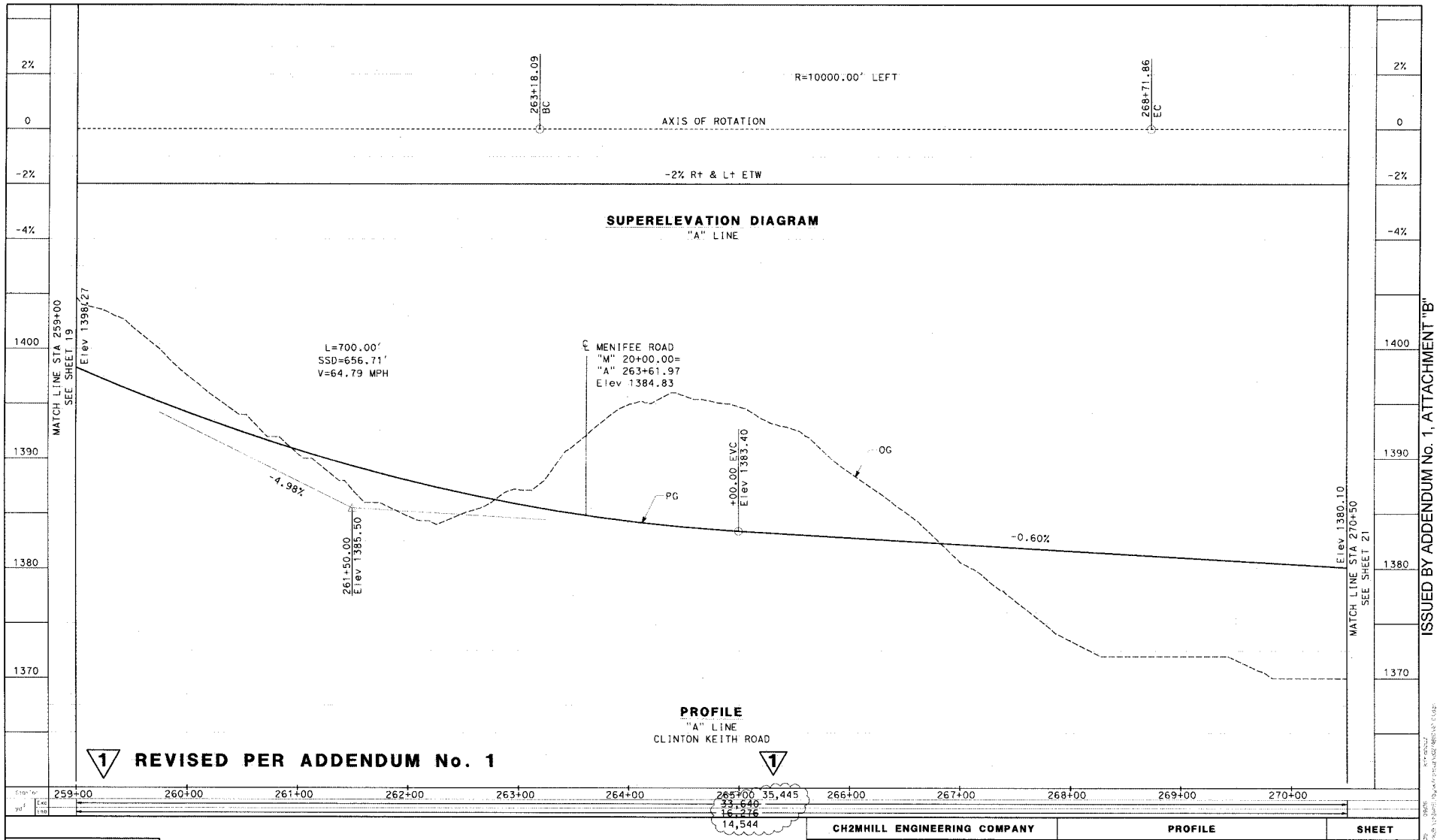

ISSUED BY ADDENDUM No. 1, ATTACHMENT "B"

Don't Dig... Until You Call U.S.A. Toll Free 800-227-2600 for the location of buried utility lines. Don't disrupt vital services.

BURIED CABLE

TWO WORKING DAYS BEFORE YOU DIG

SCALES: 1" = 40' HOR
1" = 4' VER

CH2MHILL ENGINEERING COMPANY	PROFILE	SHEET
APPROVED BY: ALICIA L CANNON, C 59168, 06/30/16 — ALICIA L CANNON, PROJECT MANAGER — APRIL 14, 2015 DATE	CLINTON KEITH ROAD FROM WHITEWOOD ROAD TO LEON ROAD	20 OF 195
DESIGNED BY CO / DRAWN BY KF / CHECKED BY AC		

PROJECT No. B2-0472 ARCHIVE No. 962-W

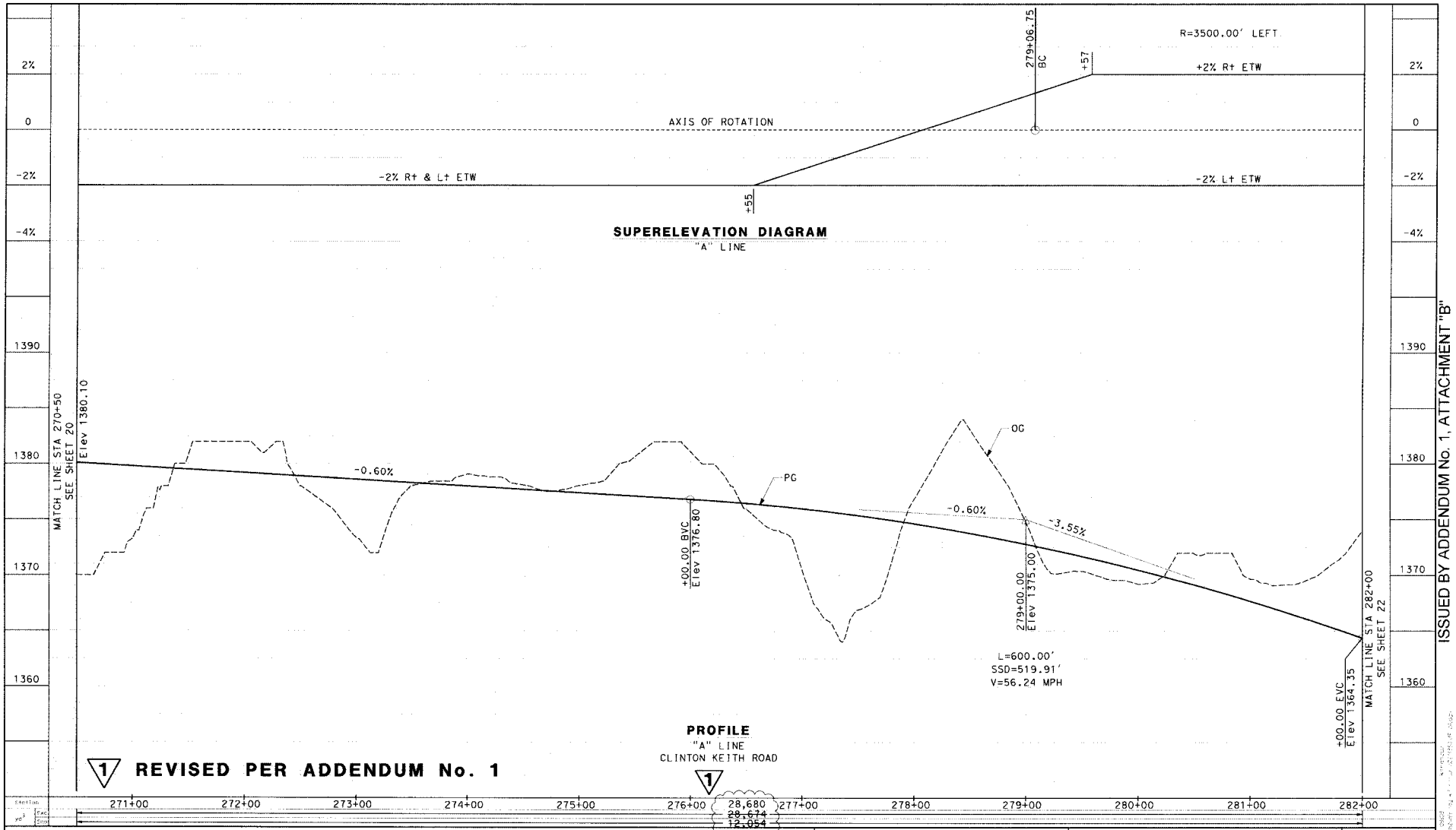

ISSUED BY ADDENDUM No. 1, ATTACHMENT "B"

Don't Dig... Until You Call U.S.A. Toll Free
800-227-2600
for the location of buried utility lines.
Don't disrupt vital services.
BURIED CABLE
TWO WORKING DAYS BEFORE YOU DIG

SCALES: 1" = 40' HOR
1" = 4' VER

CH2MHILL ENGINEERING COMPANY	PROFILE	SHEET
APPROVED BY: Alicia L Cannon, ALICIA L CANNON, PROJECT MANAGER — APRIL 14, 2015 DATE	CLINTON KEITH ROAD FROM WHITEWOOD ROAD TO LEON ROAD	21 of 195
DESIGNED BY: CO; DRAWN BY: KF; CHECKED BY: AC		

PROJECT No. B2-0472 ARCHIVE No. 962-W

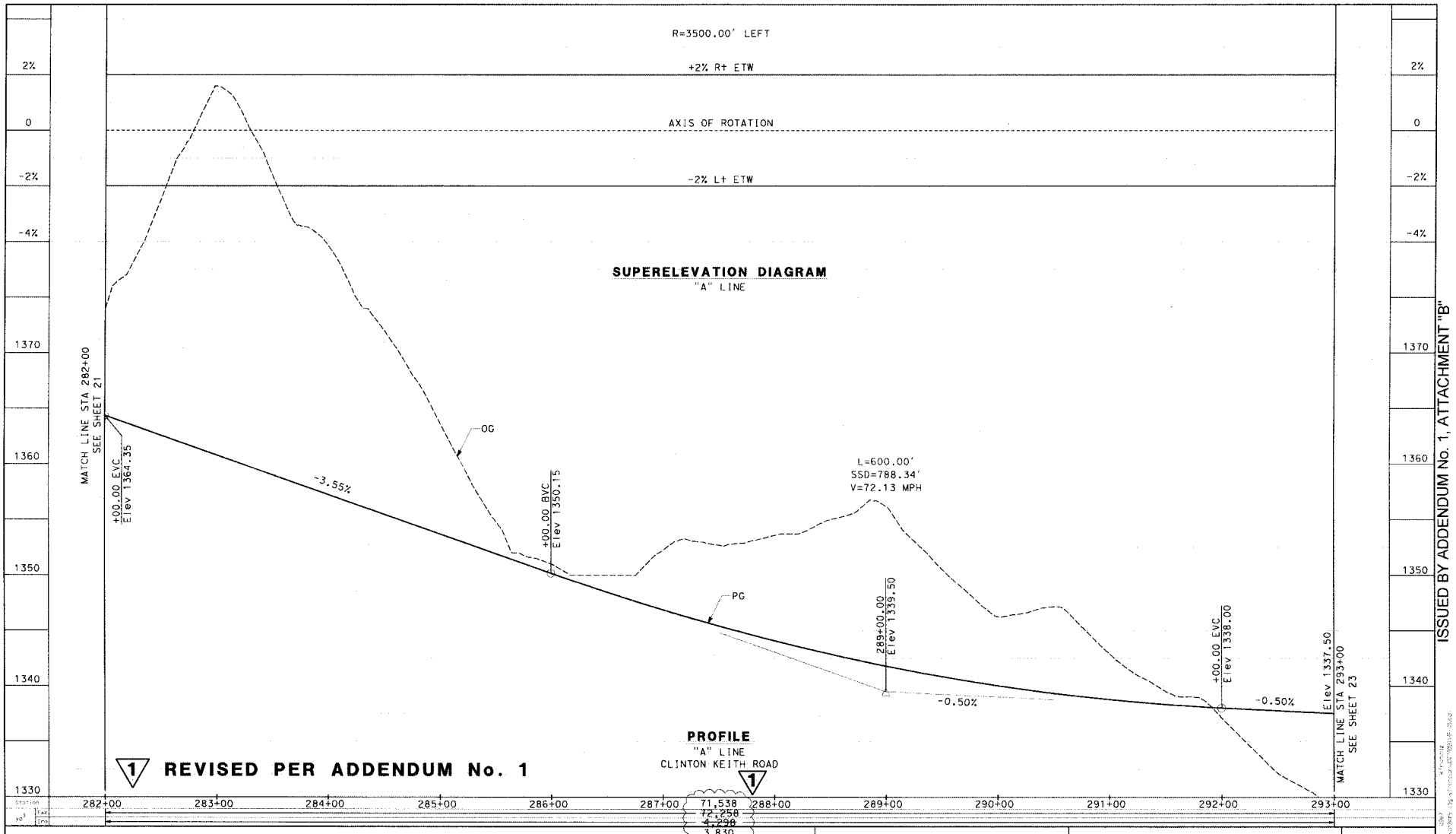

ISSUED BY ADDENDUM No. 1, ATTACHMENT "B"

Don't Dig... Until You Call U.S.A. Toll Free 800-227-2600 for the location of buried utility lines. Don't disrupt vital services.

TWO WORKING DAYS BEFORE YOU DIG

SCALES: 1" = 40' HOR
1" = 4' VER

CH2MHILL ENGINEERING COMPANY	PROFILE	SHEET
APPROVED BY: ALICIA L CANNON, PROJECT MANAGER — APRIL 14, 2015 DATE	CLINTON KEITH ROAD FROM WHITEWOOD ROAD TO LEON ROAD	22 of 195

DESIGNED BY: CO | DRAWN BY: KF | CHECKED BY: AC

PROJECT No. B2-0472 ARCHIVE No. 962-W

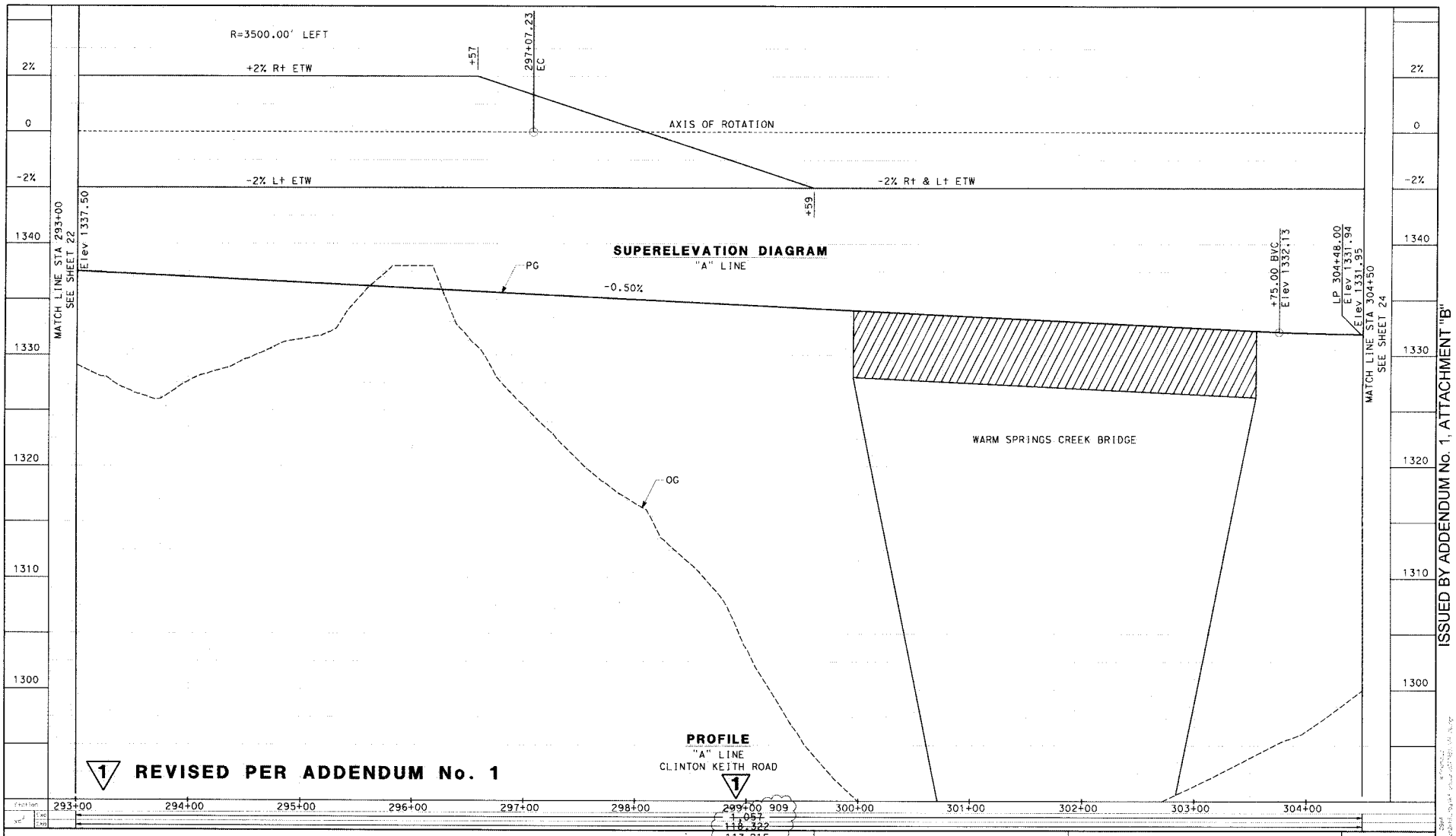

Don't Dig... Until You Call U.S.A. Toll Free
800-227-2600
for the location of buried utility lines.
Don't disrupt vital services.
BURIED CABLE
TWO WORKING DAYS BEFORE YOU DIG

SCALES: 1" = 40' HOR
1" = 4' VER

CH2MHILL ENGINEERING COMPANY	PROFILE	SHEET
APPROVED BY: ALICIA L CANNON, PROJECT MANAGER — APRIL 14, 2015 DATE	CLINTON KEITH ROAD FROM WHITEWOOD ROAD TO LEON ROAD	23 of 195

DESIGNED BY	DRAWN BY	CHECKED BY
CG	KF	AC

PROJECT No. B2-0472 ARCHIVE No. 962-W

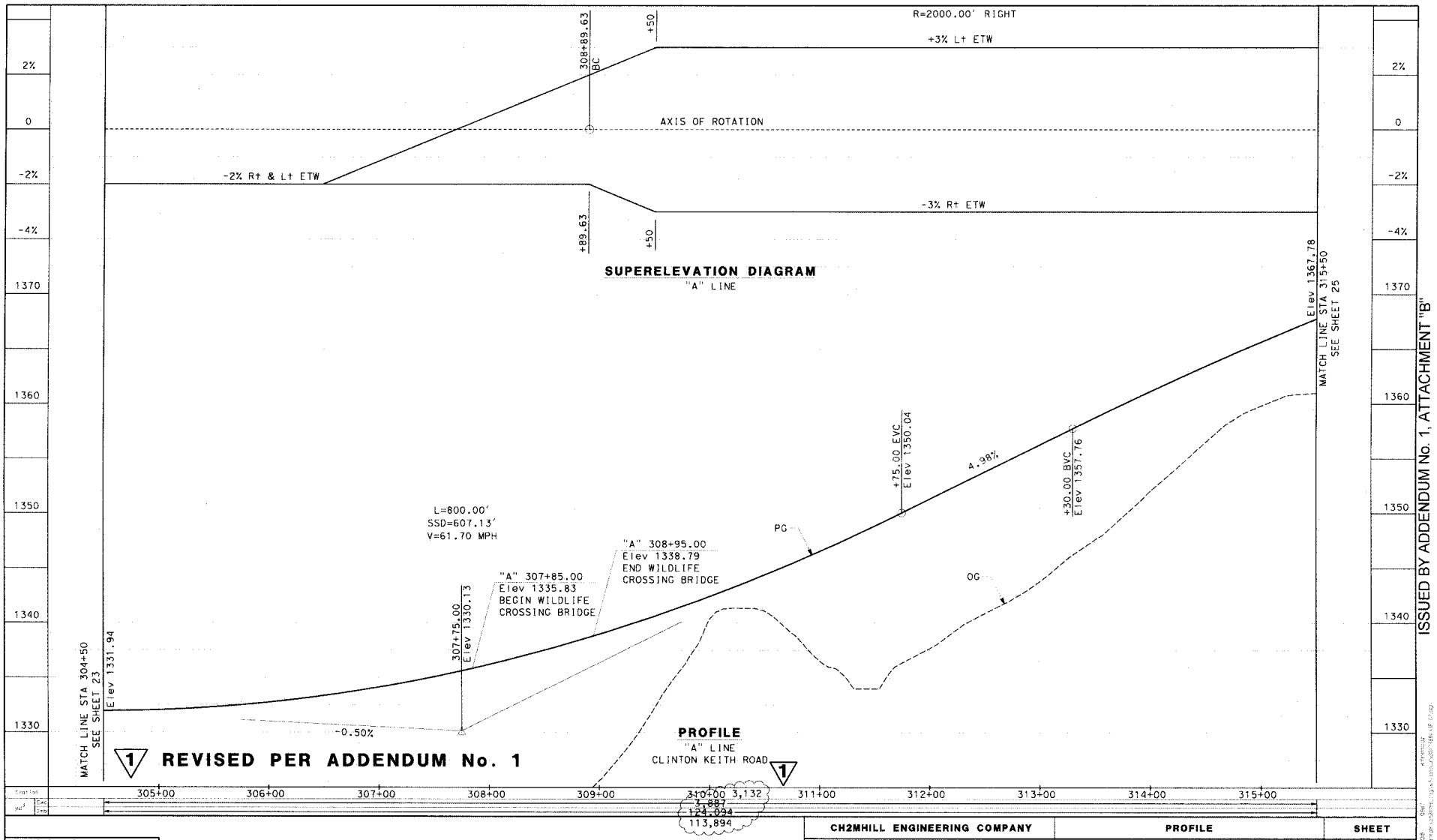

ISSUED BY ADDENDUM No. 1, ATTACHMENT "B"

Don't Dig... Until You Call U.S.A. Toll Free 800-227-2600 for the location of buried utility lines. Don't disrupt vital services. TWO WORKING DAYS BEFORE YOU DIG

SCALES: 1" = 40' HOR
1" = 4' VER

CH2MHILL ENGINEERING COMPANY	PROFILE	SHEET
APPROVED BY: ALICIA L CANNON, APRIL 14, 2015 DATE, ALICIA L CANNON PROJECT MANAGER	CLINTON KEITH ROAD FROM WHITEWOOD ROAD TO LEON ROAD	24 OF 195

DESIGNED BY CO | DRAWN BY KF | CHECKED BY AC

PROJECT No. B2-0472 ARCHIVE No. 962-W

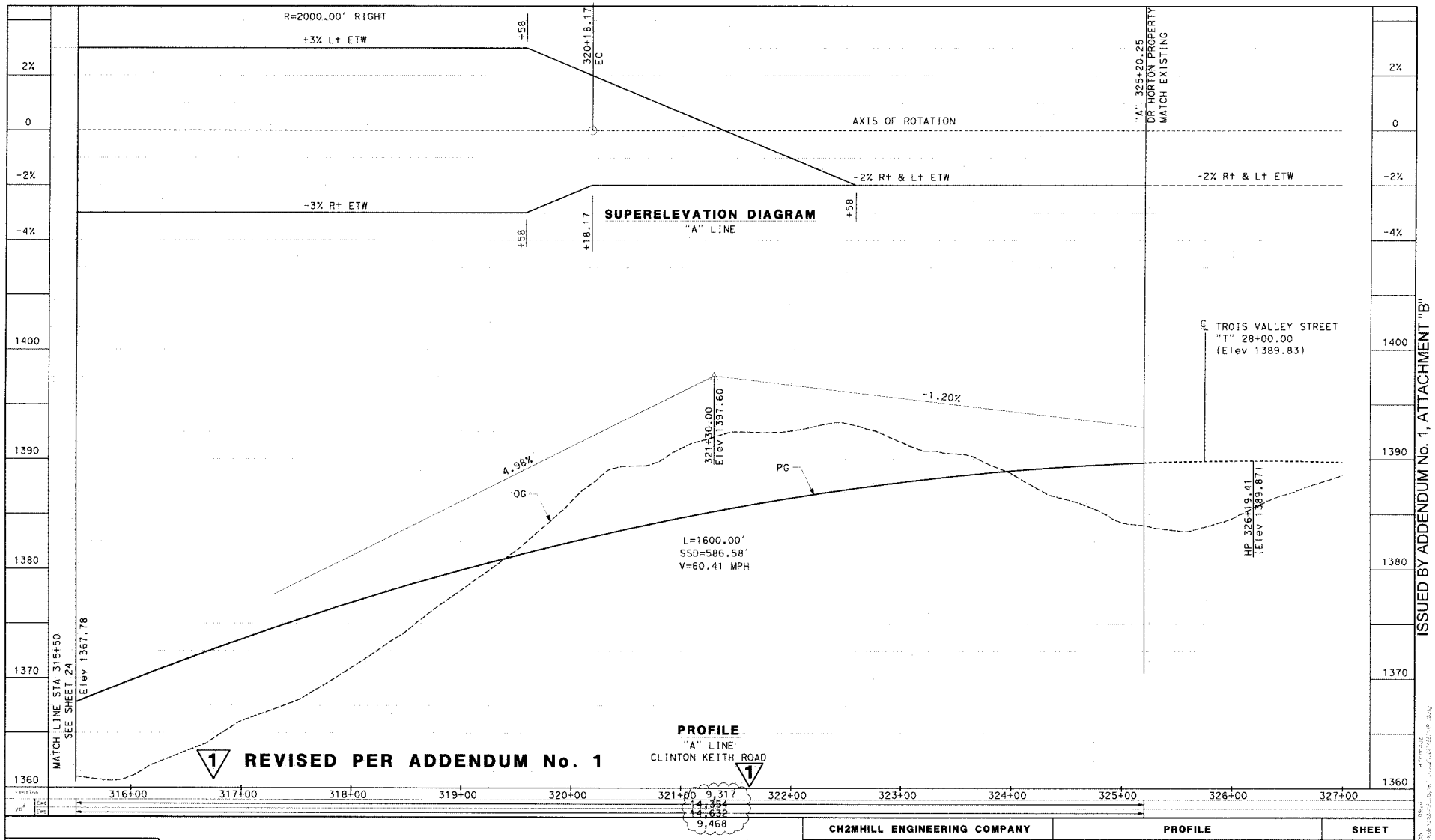

ISSUED BY ADDENDUM No. 1, ATTACHMENT "B"

Don't Dig... Until You Call U.S.A. Toll Free
800-227-2600
for the location of buried utility lines.
Don't disrupt vital services.
TWO WORKING DAYS BEFORE YOU DIG

SCALES: 1" = 40' HOR
1" = 4' VER

CH2MHILL ENGINEERING COMPANY	PROFILE	SHEET
APPROVED BY: ALICIA L CANNON, C 69168, 06/30/16 — ALICIA L CANNON, PROJECT MANAGER — APRIL 14, 2015 DATE	CLINTON KEITH ROAD FROM WHITEWOOD ROAD TO LEON ROAD	25 of 195
DESIGNED BY CO / DRAWN BY KF / CHECKED BY AC		

PROJECT No. B2-0472 ARCHIVE No. 962-W

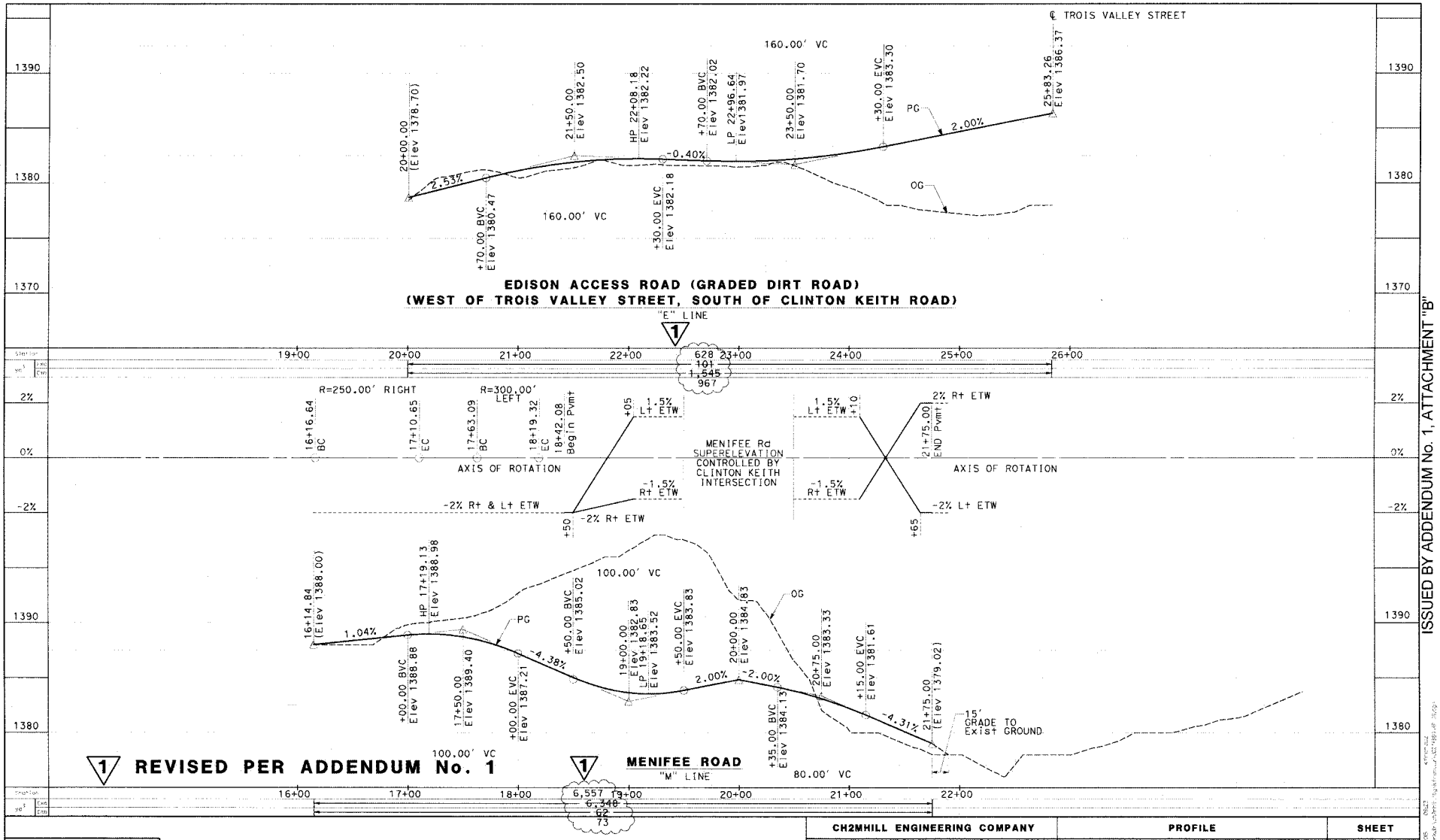

Don't Dig... Until You Call U.S.A. Toll Free 800-227-2600 for the location of buried utility lines. Don't disrupt vital services.

BURIED CABLE

TWO WORKING DAYS BEFORE YOU DIG

SCALES: 1" = 40' HOR
1" = 4' VER

CH2MHILL ENGINEERING COMPANY	PROFILE	SHEET
APPROVED BY: ALICIA L CANNON, PROJECT MANAGER — APRIL 14, 2015 DATE	CLINTON KEITH ROAD FROM WHITEWOOD ROAD TO LEON ROAD	26 of 195

DESIGNED BY CG | DRAWN BY GF | CHECKED BY AC

PROJECT No. B2-0472 ARCHIVE No. 962-W

ISSUED BY ADDENDUM No. 1, ATTACHMENT "B"

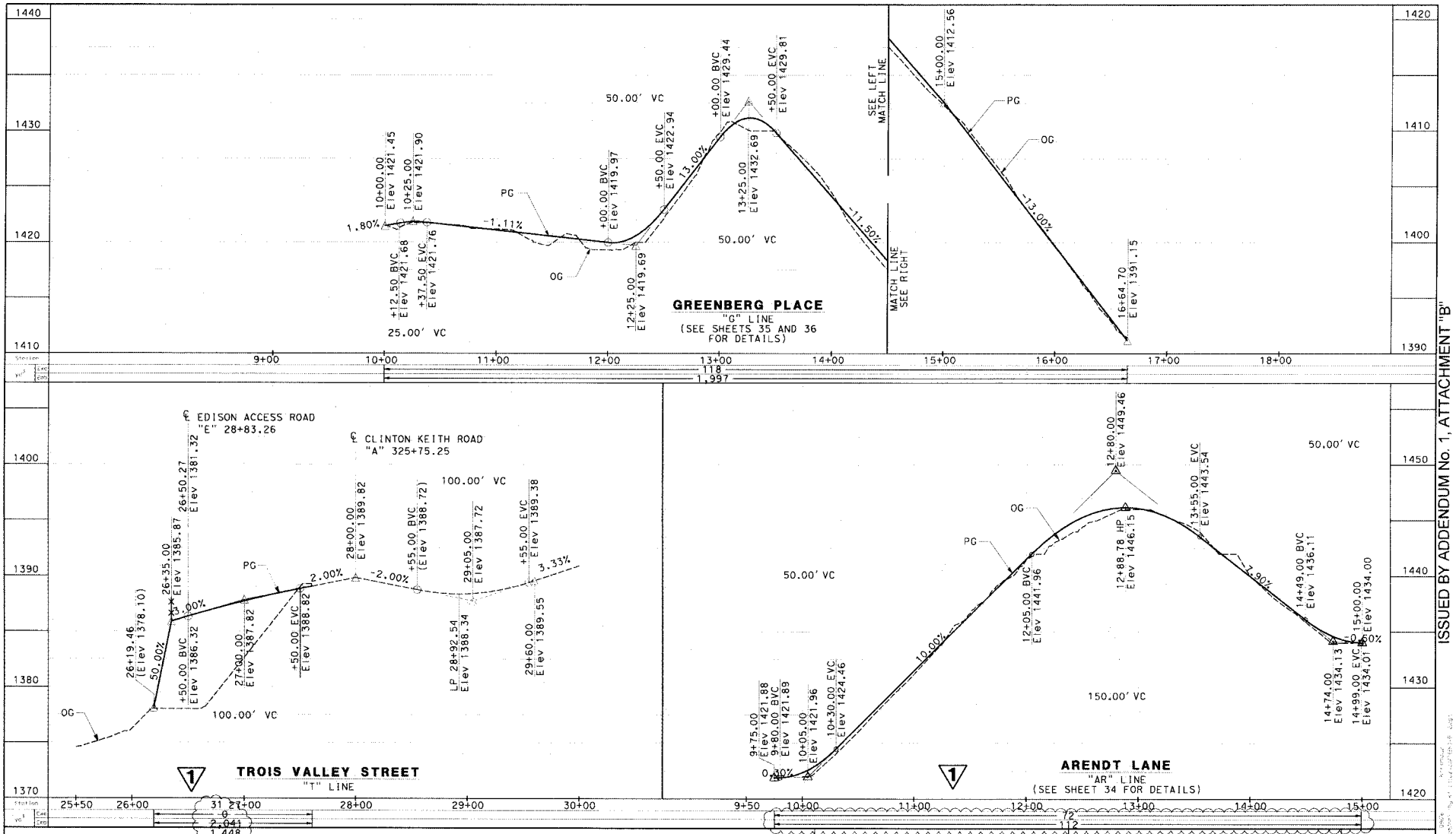

Don't Dig... Until You Call U.S.A. Toll Free 800-227-2600 for the location of buried utility lines. Don't disrupt vital services. BURIED CABLE TWO WORKING DAYS BEFORE YOU DIG

1 REVISED PER ADDENDUM No. 1

SCALES: 1" = 40' HOR
1" = 4' VER

CH2MHILL ENGINEERING COMPANY

APPROVED BY: Alicia L Cannon APRIL 14, 2015
ALICIA L CANNON DATE
PROJECT MANAGER

ALICIA L CANNON No. C 69168 06/30/16

DESIGNED BY	DRAWN BY	CHECKED BY
CD	KF	AC

PROFILE

SHEET

CLINTON KEITH ROAD
FROM
WHITEWOOD ROAD TO LEON ROAD

27 of 195

PROJECT No. B2-0472

ARCHIVE No. 962-W

ISSUED BY ADDENDUM No. 1, ATTACHMENT "B"

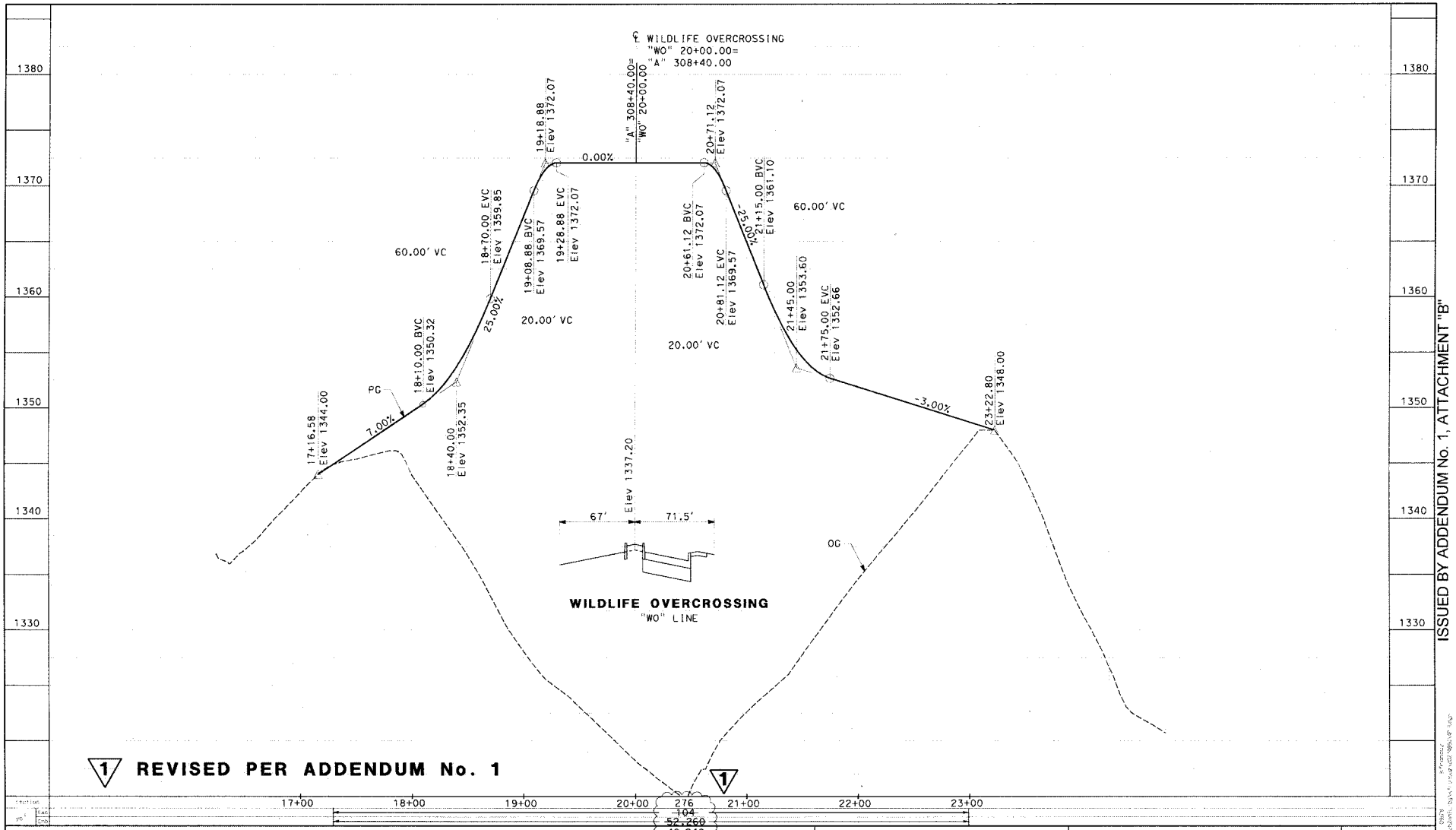
℄ WILDLIFE OVERCROSSING
"WO" 20+00.00=
"A" 308+40.00
"A" 308+40.00=
"WO" 20+00.00
17+16.58
Elev 1344.00
18+10.00 BVC
Elev 1350.32
18+40.00
Elev 1352.35
18+70.00 EVC
Elev 1359.85
19+08.88 BVC
Elev 1369.57
19+18.88
Elev 1372.07
19+28.88 EVC
Elev 1372.07
20+61.12 BVC
Elev 1372.07
20+81.12 EVC
Elev 1369.57
20+71.12
Elev 1372.07
21+15.00 BVC
Elev 1361.10
21+45.00
Elev 1353.60
21+75.00 EVC
Elev 1352.66
23+22.80
Elev 1348.00
60.00' VC
20.00' VC
0.00%
7.00%
25.00%
-25.00%
-3.00%
PG
OG
Elev 1337.20
67'
71.5'
WILDLIFE OVERCROSSING
"WO" LINE
1380
1370
1360
1350
1340
1330
17+00
18+00
19+00
20+00
21+00
22+00
23+00
276
104
52,260
49,248
REVISED PER ADDENDUM No. 1
SCALES: 1" = 40' HOR
1" = 4' VER
Don't Dig... Until You Call U.S.A. Toll Free
800-227-2600
for the location of buried utility lines.
Don't disrupt vital services.
TWO WORKING DAYS BEFORE YOU DIG
CH2MHILL ENGINEERING COMPANY
APPROVED BY:
ALICIA L CANNON
PROJECT MANAGER
APRIL 14, 2015
DATE
DESIGNED BY CO
DRAWN BY KF
CHECKED BY AC
PROFILE
CLINTON KEITH ROAD
FROM
WHITEWOOD ROAD TO LEON ROAD
SHEET
28 of 195
PROJECT No. B2-0472
ARCHIVE No. 962-W
ISSUED BY ADDENDUM No. 1, ATTACHMENT "B"

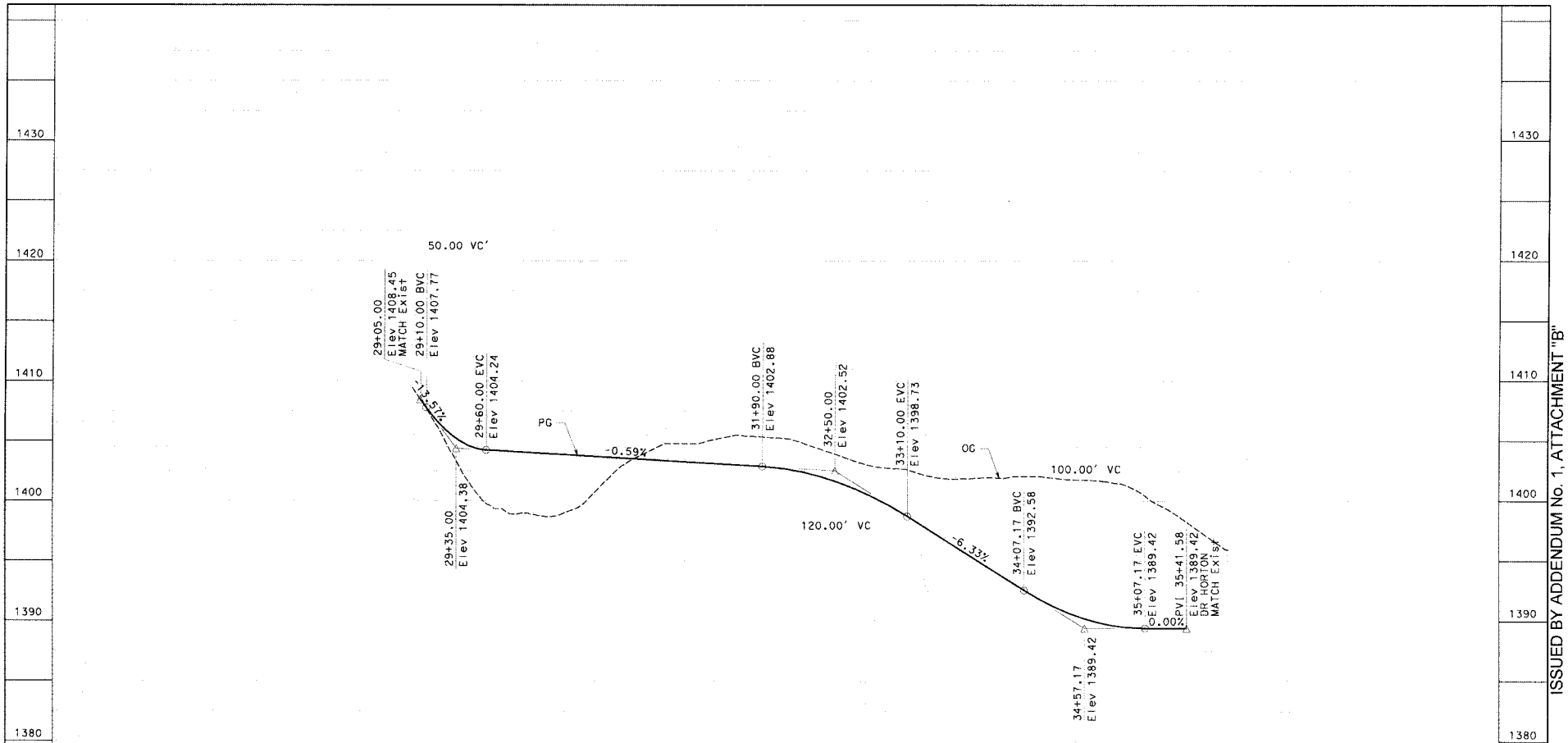

EDISON ACCESS ROAD (GRADED DIRT ROAD)
(WEST OF TROIS VALLEY STREET, NORTH OF CLINTON KEITH ROAD)
"E1" LINE

1 REVISED PER ADDENDUM No. 1

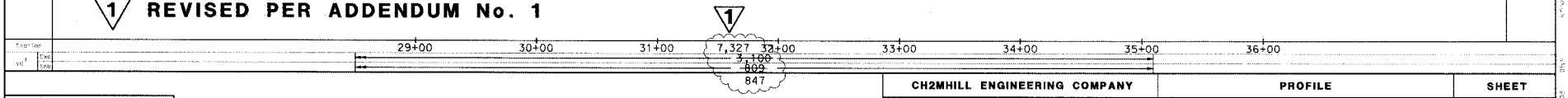

SCALES: 1" = 40' HOR
1" = 4' VER

CH2MHILL ENGINEERING COMPANY

APPROVED BY: Alicia L Cannon APRIL 14, 2015
ALICIA L CANNON DATE
PROJECT MANAGER

DESIGNED BY	DRAWN BY	CHECKED BY
CO	KF	AC

PROFILE

CLINTON KEITH ROAD
FROM
WHITEWOOD ROAD TO LEON ROAD

SHEET
29 of 195

PROJECT No. B2-0472 ARCHIVE No. **962-W**

EROSION CONTROL (BFM WITH SEEDS)
AREA = 910 SQ FT

FIBER ROLLS (Typ)
(130')

EROSION CONTROL (BFM WITH SEEDS)
AREA = 29,749 SQ FT

"A" 303+83.13
BEGIN FIBER ROLLS

EROSION CONTROL
(RIPARIAN AREAS)
AREA = 24,100 SQ FT

1

TREES WITHIN WARM SPRINGS CREEK BRIDGE WILL BE TOPPED OFF FOR CONSTRUCTION OF BRIDGE BUT NOT REMOVED

WARM SPRINGS CREEK TO BE GRADED BACK TO EXISTING CONDITION UPON PROJECT COMPLETION

WARM SPRINGS CREEK BRIDGE

FIBER ROLLS (Typ)
(6550')

EROSION CONTROL (BFM WITH SEEDS)
AREA = 83,421 SQ FT

R/W

F

F/C

C/F

"A" 299+66.98
END FIBER ROLLS

EROSION CONTROL (BFM WITH SEEDS)
AREA = 11,989 SQ FT

FIBER ROLLS (Typ)
(665')

"A" LINE

294 295 296 297 298 299 300 301 302 303 304

CLINTON KEITH ROAD

MATCH LINE STA 293+00
SEE SHEET 55

MATCH LINE STA 304+50
SEE SHEET 57

WARM SPRINGS CREEK

FIBER ROLLS (Typ)
(2135')

EROSION CONTROL
(BFM WITH SEEDS)
AREA = 1,834 SQ FT

APPROVED FOR EROSION CONTROL WORK ONLY

1 REVISED PER ADDENDUM No. 1

SCALE: 1" = 40' HOR

Don't Dig... Until You Call U.S.A. Toll Free
800-227-2600
for the location of buried utility lines.
Don't disrupt vital services.
TWO WORKING DAYS BEFORE YOU DIG

CH2MHILL ENGINEERING COMPANY	EROSION CONTROL	SHEET
APPROVED BY: Alicia L Cannon APRIL 14, 2015 DATE ALICIA L CANNON PROJECT MANAGER DESIGNED BY CD · DRAWN BY KF · CHECKED BY AC	CLINTON KEITH ROAD FROM WHITEWOOD ROAD TO LEON ROAD	56 of 195

PROJECT No. B2-0472 ARCHIVE No. 962-W

ISSUED BY ADDENDUM No. 1, ATTACHMENT "B"

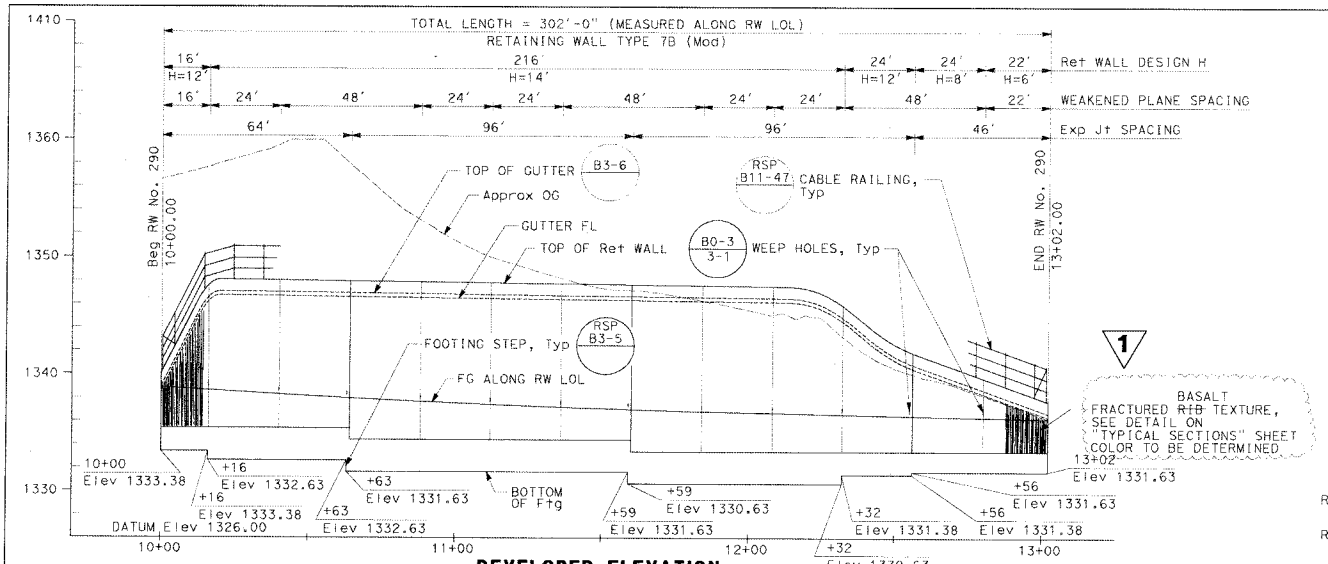

DEVELOPED ELEVATION
SCALE: 1"=20' HORIZ
1"=5' VERT

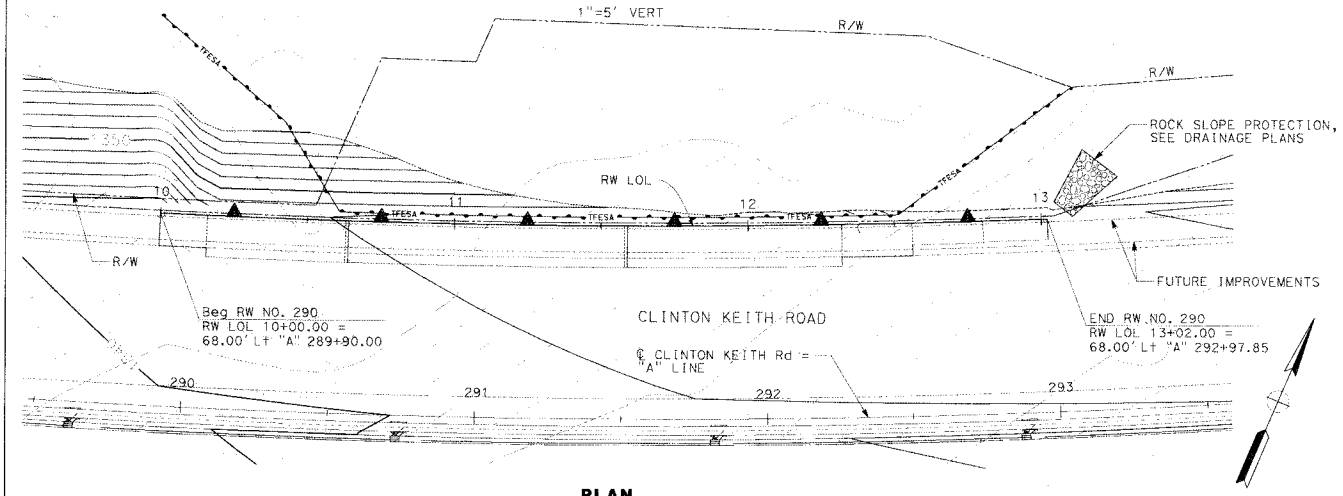

PLAN
SCALE 1"=20'

INDEX TO PLANS

RETAINING WALL NO. 290 GENERAL PLAN
RETAINING WALL NO. 290 TYPICAL SECTIONS
RETAINING WALL NO. 290 TYPE 7B (MODIFIED) DETAILS NO. 1
RETAINING WALL NO. 290 TYPE 7B (MODIFIED) DETAILS NO. 2

CALTRANS STANDARD PLANS (DATED 2010)

A10A	ABBREVIATIONS (SHEET 1 OF 2)
A10B	ABBREVIATIONS (SHEET 2 OF 2)
A10C	LINES AND SYMBOLS (SHEET 1 OF 3)
A10D	LINES AND SYMBOLS (SHEET 2 OF 3)
A10E	LINES AND SYMBOLS (SHEET 3 OF 3)
A10F	LEGEND-SOIL (SHEET 1 OF 2)
A10G	LEGEND-SOIL (SHEET 2 OF 2)
B0-3	BRIDGE DETAILS
RSP B3-5	RETAINING WALL DETAILS NO. 1
B3-6	RETAINING WALL DETAILS NO. 2
RSP B11-47	CABLE RAILING

STANDARD PLAN SHEET NO.
DETAIL NO.

NOTES:

1. CONTRACTOR TO FIELD VERIFY LOCATIONS OF EXISTING ARCHAEOLOGICAL FEATURES PRIOR TO RETAINING WALL CONSTRUCTION.
2. FOR CONSTRUCTION REQUIREMENTS AT EXISTING ARCHAEOLOGICAL FEATURES, REFER TO PROJECT SPECIFICATIONS.
3. FOR TYPICAL SECTIONS, SEE "TYPICAL SECTION" SHEET.
4. FOR REINFORCEMENT DETAILS, SEE "TYPE 7B (MODIFIED) DETAILS NO. 1" AND "TYPE 7B (MODIFIED) DETAILS NO. 2" SHEETS.
5. FOR WALL DRAINAGE DETAILS, SEE "TYPE 7B (MODIFIED) DETAILS NO. 2" SHEET.

Don't Dig... Until You Call U.S.A. Toll Free 800-227-2600 for the location of buried utility lines. Don't disrupt vital services. TWO WORKING DAYS BEFORE YOU DIG

1 REVISED PER ADDENDUM No. 1

APPROVED FOR RETAINING WALL WORK ONLY

CH2MHILL ENGINEERING COMPANY	RETAINING WALL NO. 290 GENERAL PLAN	SHEET
APPROVED BY: JOHN POWELL, APRIL 14, 2015 DATE	**CLINTON KEITH ROAD** FROM WHITEWOOD ROAD TO LEON ROAD	117 of 195
DESIGNED BY JP / DRAWN BY NM / CHECKED BY HS		

PROJECT No. 82-0472 ARCHIVE No. **962-W**

ISSUED BY ADDENDUM No. 1, ATTACHMENT "B"

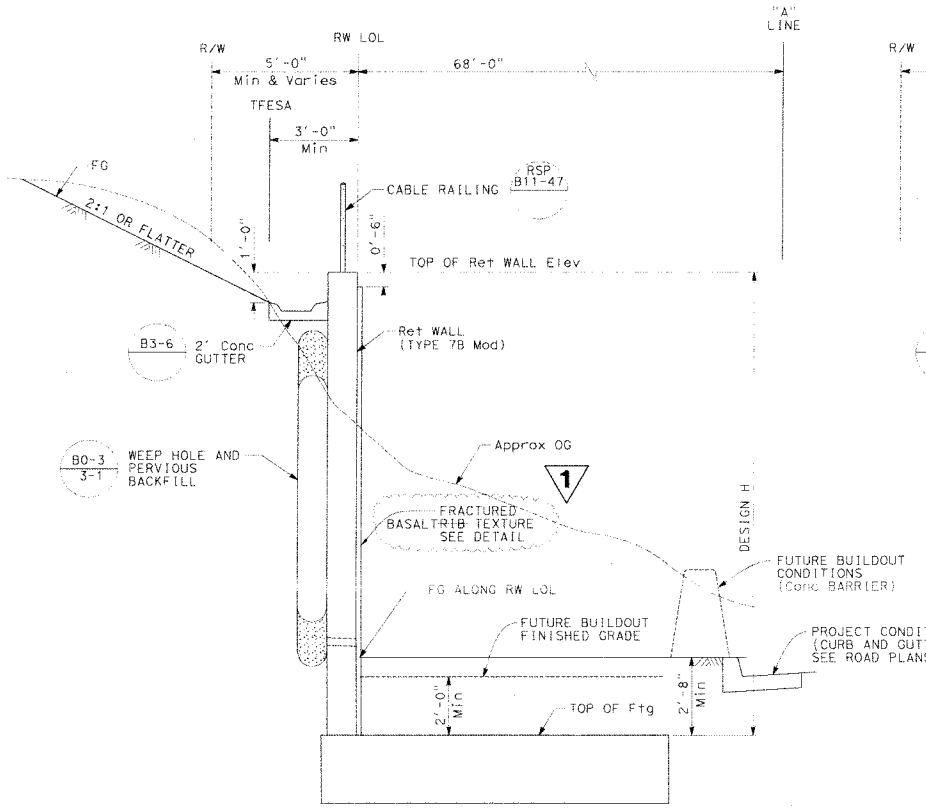

TYPICAL SECTION
(STA 10+00 TO 11+60)
SCALE ½" = 1'-0"

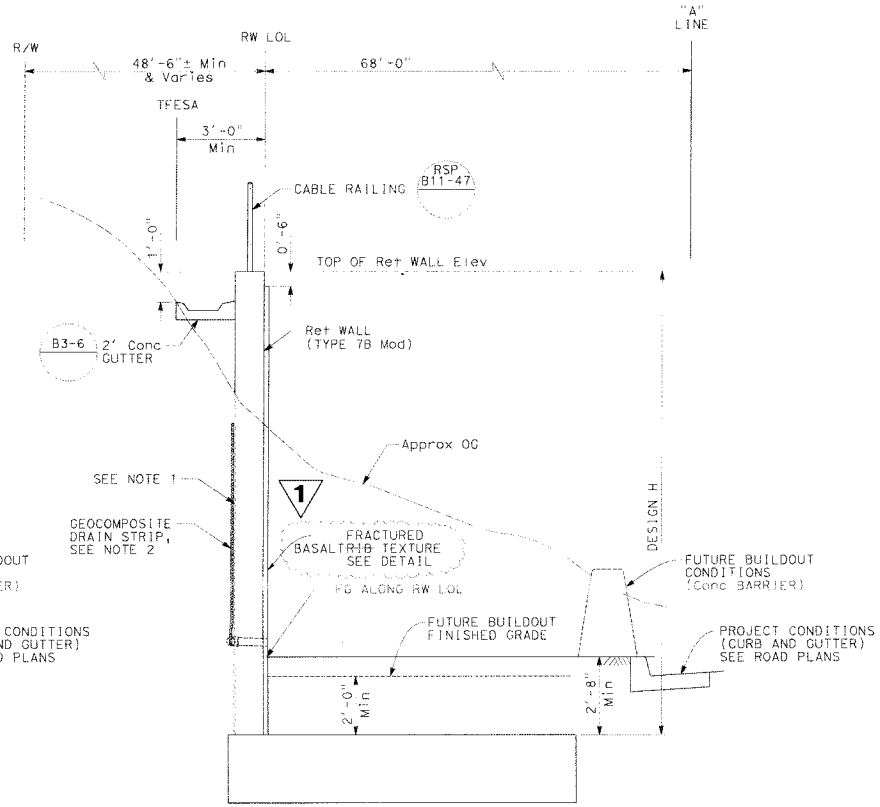

TYPICAL SECTION
(STA 11+60 TO 13+02)
SCALE ½" = 1'-0"

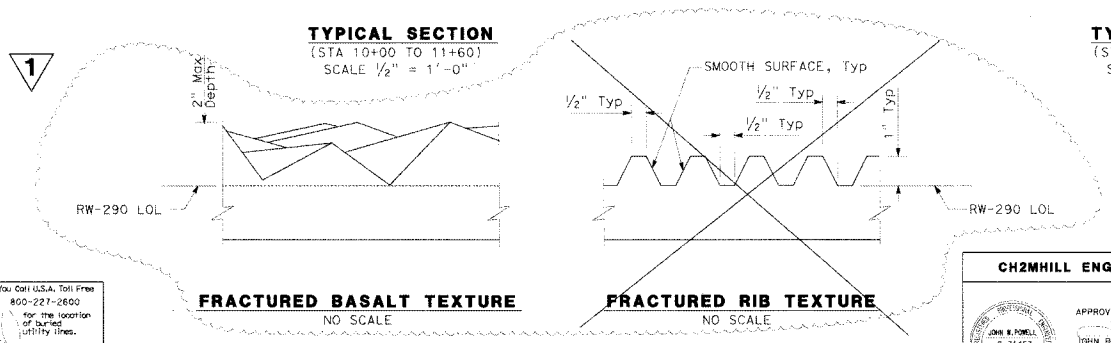

FRACTURED BASALT TEXTURE
NO SCALE

FRACTURED RIB TEXTURE
NO SCALE

NOTES:

1. CAST NEAT AGAINST EXCAVATION, OR BACKFILL WITH CEMENT SLURRY BACKFILL.
2. FOR ADDITIONAL WALL DRAINAGE DETAILS, SEE "TYPE 7B (MODIFIED) DETAILS NO. 2" SHEET.

Don't Dig... Until You Call U.S.A. Toll Free 800-227-2600 for the location of buried utility lines. Don't disrupt vital services.
BUSTER CABLE
TWO WORKING DAYS BEFORE YOU DIG

1 **REVISED PER ADDENDUM No. 1**
APPROVED FOR RETAINING WALL WORK ONLY

CH2MHILL ENGINEERING COMPANY	RETAINING WALL NO. 290 TYPICAL SECTIONS	SHEET
APPROVED BY: JOHN POWELL, APRIL 14, 2015 DATE	**CLINTON KEITH ROAD** FROM WHITEWOOD ROAD TO LEON ROAD	118 of 195
DESIGNED BY JP / DRAWN BY NM / CHECKED BY HS		

PROJECT No. B2-0472 ARCHIVE No. **962-W**

ISSUED BY ADDENDUM No. 1, ATTACHMENT "B"

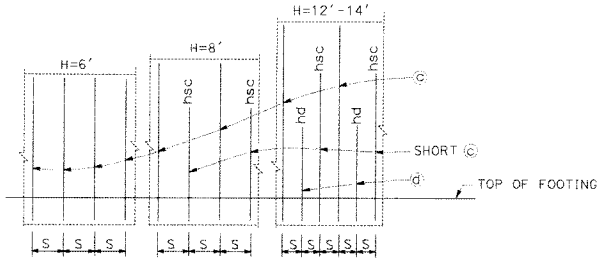

ELEVATION
NO SCALE

NOTE:

"hsc" and "hd" above bars indicate distance from top of footing to upper end of the bars, see table.

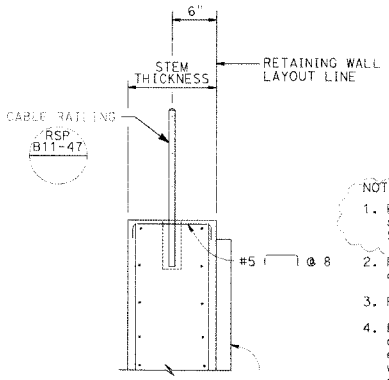

DETAIL A
3/4 = 1'-0"

1

NOTES:

1. For Fractured ~~Rib~~ BASALT Texture, see detail on "TYPICAL SECTIONS" SHEET.
2. For Details not shown and Drainage Notes see 3-5
3. Footing cover, 2'-0" minimum.
4. Provide #6 @ 12" X 16'-0" ⓐ bar over a distance of 8'-0" measured from all expansion joints begin wall and end wall locations. Hook ⓐ bar into footing and reduce bar length as needed to maintain Min Clr cover.
5. See "Table of Wall Dimensions, Reinforcing Steel and Bearing Stress Data" on "TYPE 7B (MODIFIED) DETAIL NO. 1" sheet.

FRACTURED ~~RIB~~ BASALT TEXTURE, SEE NOTE 1

1

DESIGN DATA

Design: AASHTO LRFD Bridge Design Specifications, 4th edition with California Amendments

EQE: Mononobe-Okabe Method
K_h = 0.2
K_v = 0.0
K_{AE} = 0.64
K_E = 0.36

Soil: $\emptyset$ = 40°
γ = 120 pcf

Reinforced Concrete: f'c = 3600 psi
fy = 60,000 psi

Load Combinations and Limit States

Service I $Q=1.00DC+1.00EV+1.00EH$

Strength I $Q=\alpha DC+\beta EV+1.50EH$

Extreme I $Q=1.00DC+1.00EV+1.00EH+1.00EQD+1.00EQE$

Where:
- Q: Force Effects
- α: 1.25 or 0.90, which ever controls design
- β: 1.35 or 1.00, which ever controls design
- DC: Dead Load of Structure Components
- EV: Vertical Earth Fill Pressure
- EQE: Seismic Earth Pressure
- EQD: Soil and Structure Components Inertia. Soil inertia ignored for stem design
- EH: Lateral Earth Pressure

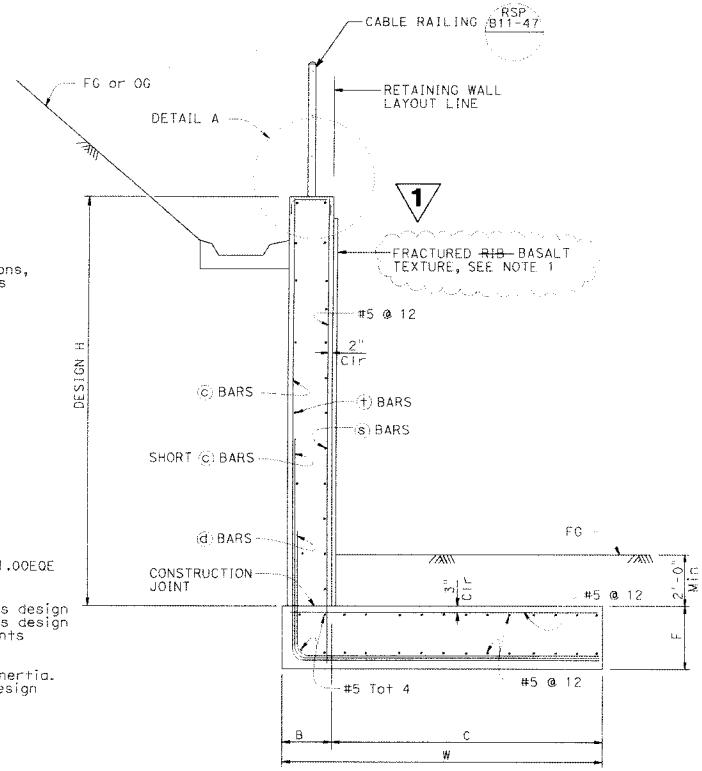

SPREAD FOOTING SECTION
NO SCALE

ISSUED BY ADDENDUM No. 1, ATTACHMENT "B"

Don't Dig... Until You Call U.S.A. Toll Free 800-227-2600 for the location of buried utility lines. Don't disrupt vital services.
TWO WORKING DAYS BEFORE YOU DIG

1 **REVISED PER ADDENDUM No. 1**

APPROVED FOR RETAINING WALL WORK ONLY

CH2MHILL ENGINEERING COMPANY	RETAINING WALL NO. 290 TYPE 7B (MODIFIED) DETAIL NO. 1	SHEET
APPROVED BY: JOHN POWELL, APRIL 14, 2015 DATE	**CLINTON KEITH ROAD** FROM WHITEWOOD ROAD TO LEON ROAD	119 of 195
DESIGNED BY JP / DRAWN BY NM / CHECKED BY HS		

PROJECT No. B2-0472 ARCHIVE No. **962-W**

TABLE OF WALL DIMENSIONS, REINFORCING STEEL AND BEARING STRESS DATA				
DESIGN H	6'	8'	12'	14'
W	8'-3"	8'-9"	13'-0"	16'-0"
C	7'-0"	7'-6"	11'-2"	14'-2"
B	1'-3"	1'-3"	1'-10"	1'-10"
F	1'-9"	1'-9"	2'-0"	2'-9"
STEM THICKNESS	1'-0"	1'-0"	1'-7"	1'-7"
BATTER	0	0	0	0
S	0'-9"	0'-9"	0'-6"	0'-6"
ⓒ BARS	#6	#6	#6	#7
hsc	N/A	7'-10"	11'-10"	13'-10"
ⓓ BARS	N/A	N/A	#6	#7
hd	N/A	N/A	3'-3"	5'-6"
ⓢ BARS	#4 @ 12	#4 @ 12	#5 @ 12	#5 @ 12
ⓣ BARS	#4 @ 12	#4 @ 12	#4 @ 12	#4 @ 12
SER I: B'(ft), q_0(ksf)	8.2, 0.6	8.4, 0.7	13.0, 0.8	15.6, 0.9
STR Ia: B'(ft), q_0(ksf)	8.1, 0.8	8.1, 0.9	12.4, 1.0	14.8, 1.2
STR, Ib: B'(ft), q_0(ksf)	7.6, 0.6	7.2, 0.7	11.0, 0.8	13.1, 1.0
Ext I: B'(ft), q_0(ksf)	5.1, 1.0	3.2, 1.7	4.4, 2.2	5.4, 2.6

LEGEND:
SER: service limit state
STR: strength limit state
EXT: extreme event limit state
B': effective footing width (ft)
q_0: gross uniform bearing stress (ksf)

RETAINING WALL ELEVATIONS	
RW LOL STA	TOP OF WALL ELEV
10+00	1340.06
10+16	1347.56
10+25	1348.03
10+50	1347.96
10+64	1347.92
10+75	1347.88
11+00	1347.81
11+25	1347.73
11+50	1347.66
11+60	1347.63
11+75	1347.58
12+00	1347.51
12+25	1346.85
12+32	1345.85
12+50	1342.61
12+75	1340.10
12+80	1339.64
13+00	1337.85
13+02	1337.67

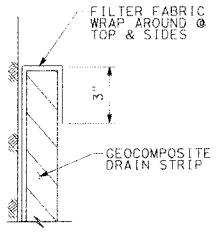

DETAIL B
NO SCALE

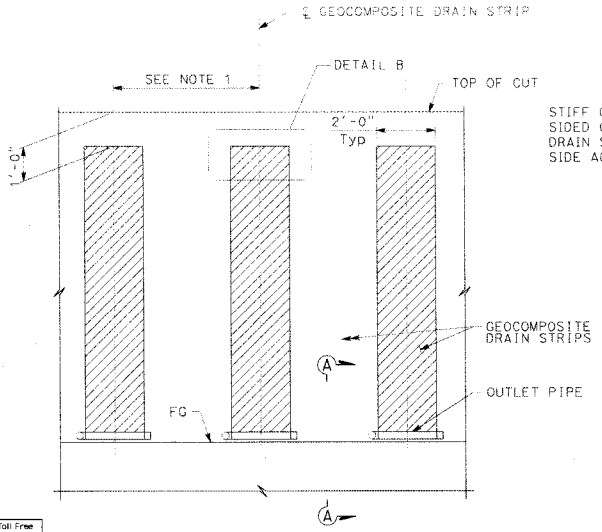

WALL PARTIAL ELEVATION
NO SCALE

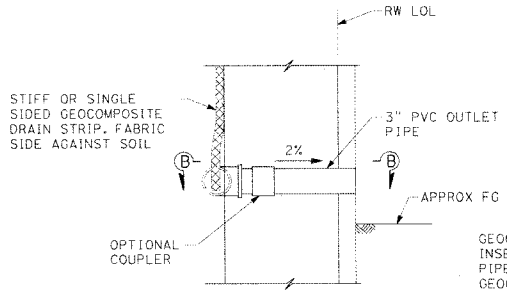

WALL DRAIN DETAIL AT WEEPHOLE
SECTION A-A
NO SCALE

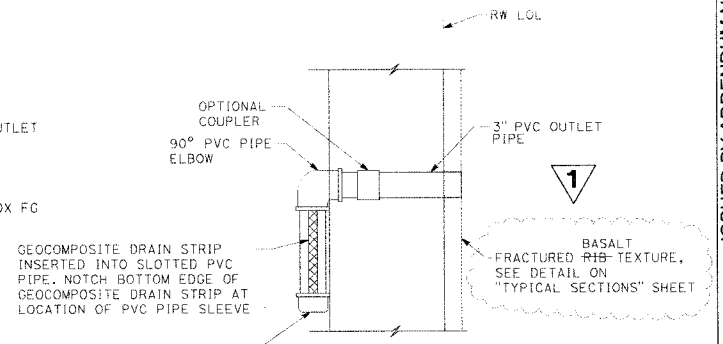

SECTION B-B
NO SCALE

NOTE:
1. SPACE GEOCOMPOSITE DRAIN STRIPS SAME AS WEEP HOLES.

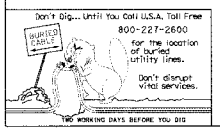

1 **REVISED PER ADDENDUM No. 1**

APPROVED FOR RETAINING WALL WORK ONLY

CH2MHILL ENGINEERING COMPANY	RETAINING WALL NO. 290 TYPE 7B (MODIFIED) DETAIL NO. 2	SHEET
APPROVED BY: JOHN POWELL, APRIL 14, 2015 DATE	**CLINTON KEITH ROAD** FROM WHITEWOOD ROAD TO LEON ROAD	120 of 195
DESIGNED BY JP, DRAWN BY NM, CHECKED BY HS		

PROJECT No. B2-0472 ARCHIVE No. **962-W**

ISSUED BY ADDENDUM No. 1, ATTACHMENT "B"

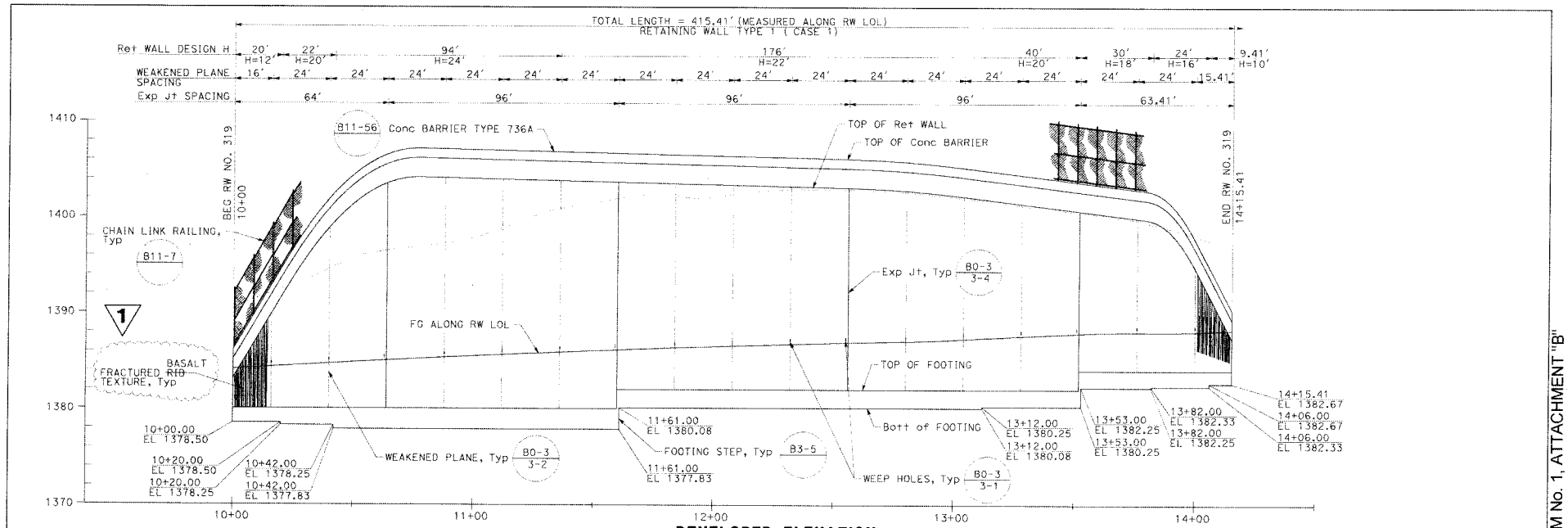

DEVELOPED ELEVATION

SCALE: 1"=20' HORIZ
1"=5' VERT

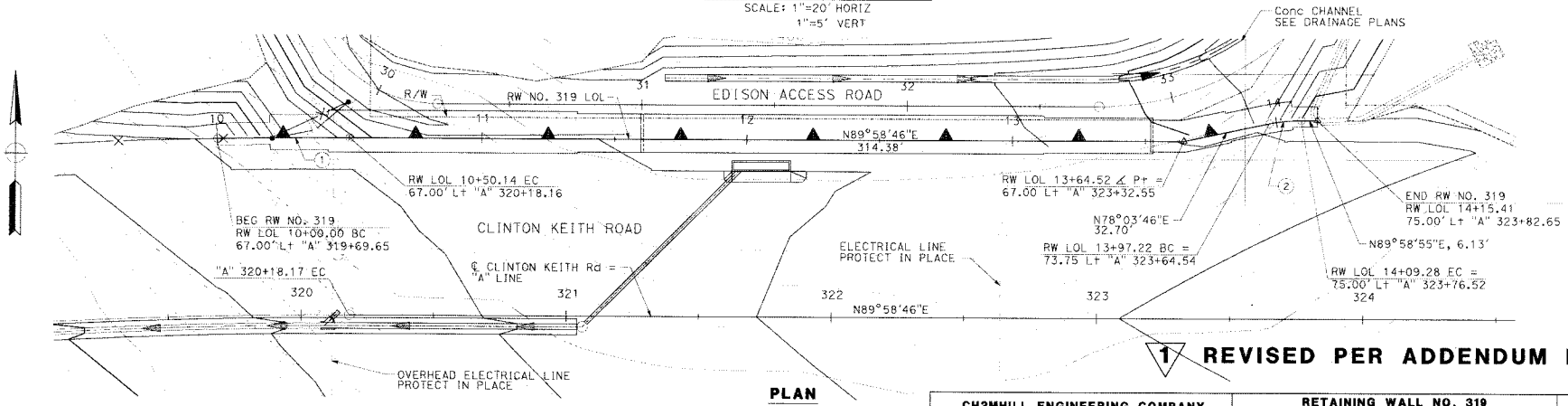

PLAN

SCALE 1"=20'

1 REVISED PER ADDENDUM No. 1

Don't Dig... Until You Call U.S.A. Toll Free 800-227-2600 for the location of buried utility lines. Don't disrupt vital services. TWO WORKING DAYS BEFORE YOU DIG

CURVE DATA

NO	R	Δ	T	L
1	2067.00'	01°23'23"	25.07'	50.14'
2	58.00'	11°55'09"	6.05'	12.07'

APPROVED FOR RETAINING WALL WORK ONLY

CH2MHILL ENGINEERING COMPANY

APPROVED BY: JOHN POWELL — APRIL 14, 2015 DATE

DESIGNED BY JP | DRAWN BY NM | CHECKED BY HS

RETAINING WALL NO. 319 GENERAL PLAN

CLINTON KEITH ROAD
FROM
WHITEWOOD ROAD TO LEON ROAD

SHEET 121 of 195

PROJECT No. B2-0472 ARCHIVE No. **962-W**

ISSUED BY ADDENDUM No. 1, ATTACHMENT "B"

RETAINING WALL ELEVATIONS

RW LOL STA	TOP OF WALL ELEV
10+00	1383.15
10+25	1393.70
10+50	1401.36
10+75	1404.14
11+00	1404.01
11+25	1403.86
11+50	1403.72
11+75	1403.57
12+00	1403.42
12+25	1403.27
12+50	1403.12
12+75	1402.87
13+00	1402.30
13+25	1401.51
13+50	1400.72
13+75	1399.92
14+00	1394.66
14+15.41	1387.28

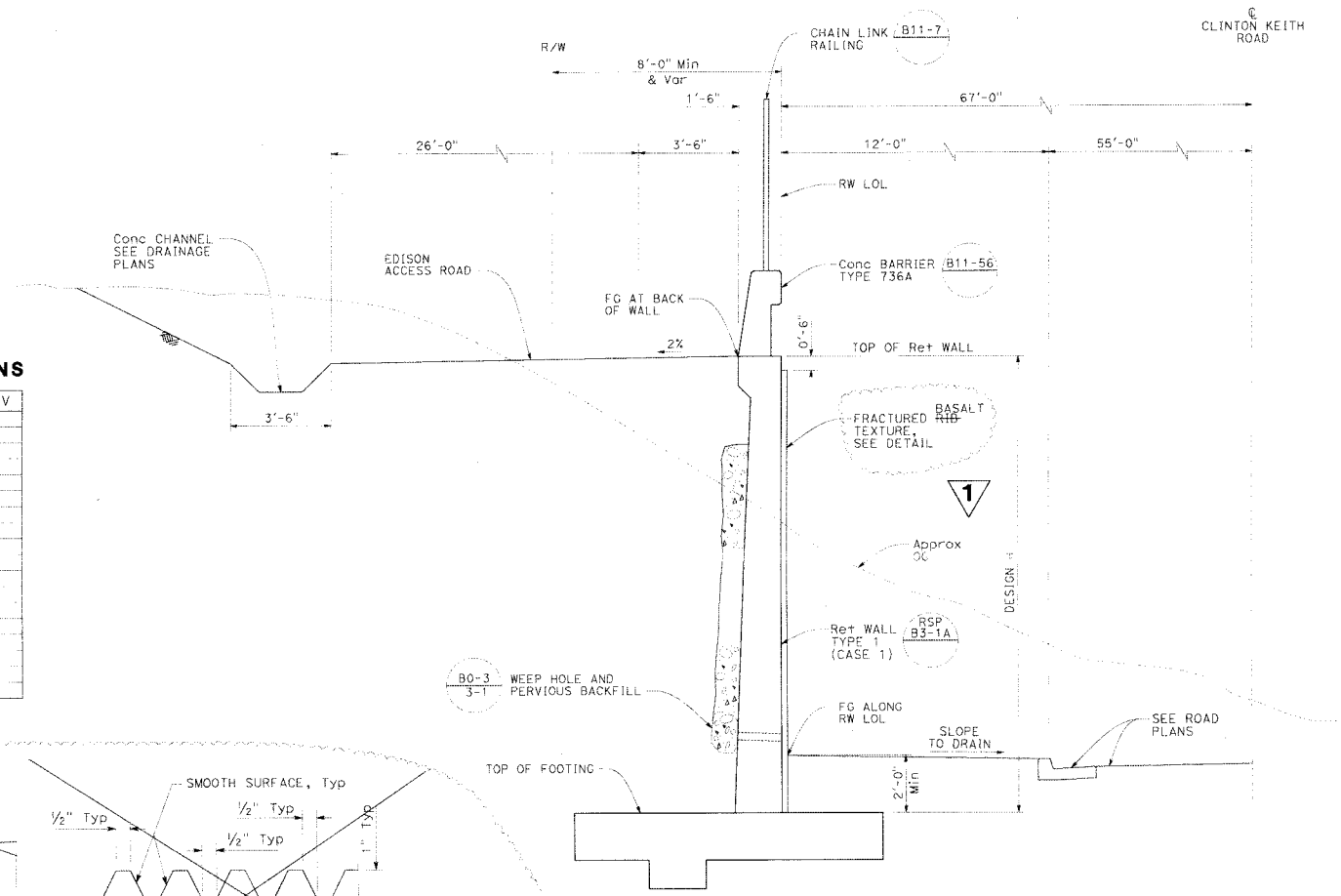

TYPICAL SECTION
SCALE 1/2"=1'-0"

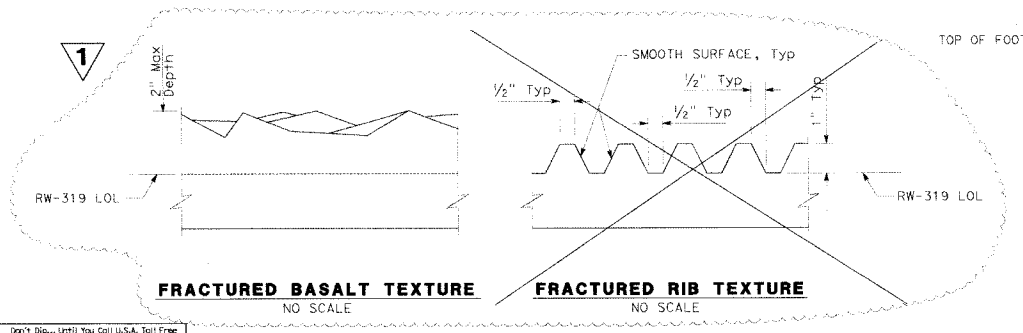

FRACTURED BASALT TEXTURE
NO SCALE

FRACTURED RIB TEXTURE
NO SCALE

Don't Dig... Until You Call U.S.A. Toll Free 800-227-2600 for the location of buried utility lines. Don't disrupt vital services.
TWO WORKING DAYS BEFORE YOU DIG

1 **REVISED PER ADDENDUM No. 1**
APPROVED FOR RETAINING WALL WORK ONLY

CH2MHILL ENGINEERING COMPANY	RETAINING WALL NO. 319 DETAILS	SHEET
APPROVED BY: JOHN POWELL APRIL 14, 2015 DATE	**CLINTON KEITH ROAD** FROM WHITEWOOD ROAD TO LEON ROAD	122 of 195
DESIGNED BY JP / DRAWN BY NM / CHECKED BY HS	PROJECT No. B2-0472 ARCHIVE No.	**962-W**

ISSUED BY ADDENDUM No. 1, ATTACHMENT "B"

Clinton Keith Road Construction Project – Phase 2
From Whitewood Road to Leon Road
In the City of Murrieta and French Valley Area
Project No. B2-0472

ATTACHMENT "C" CONTRACTOR QUESTIONS

AND RESPONSES

The Questions and Responses information document is available on the County website at the following link during the advertisement period for this project:

http://rctlma.org/trans/Contractors-Corner/Notices-Inviting-Bids

This (downloadable) file is provided for reference only. For any discrepancy written on this Questions and Responses document, the Contractor shall conform to the contract documents.

Clinton Keith Road Construction Project – Phase 2
From Whitewood Road to Leon Road
In the City of Murrieta and French Valley Area
Project No. B2-0472

CONTRACTOR QUESTIONS AND RESPONSES		
1	Question	**Rock Socket Diameter** Reference Sheet 17 of 39, Warm Springs Creek Bridge – Bent Details No. 2, 2 Lane Option, which requires 90" CIDH piling with 6" clear spacing. Reference Sheet 17 of 39, Warm Springs Creek Bridge – Bent Details No. 2, 4 Lane Option, which requires 90" CIDH piling with 6" clear spacing. The diameter specified is an odd size which is not readily available, and will require custom fabrication and tooling to achieve. This will be unnecessarily expensive and take months to procure. Therefore, please confirm it is acceptable to maintain the 90" diameter (6" clear) above the top of bedrock elevation, and decrease the pile diameter below that to 84" (3" clear). The reduction in pile diameter below the top of bedrock may correspond to a decrease in pile capacity. If so, please provide the additional length of pile required if the diameter is decreased.
	Response	6" clear spacing is required per Caltrans standards, so reduction of the shaft diameter is not permissible without modifications to the rebar cage and associated structural/geotechnical re-analysis and re-design of the pile. A suggested alternative would be to increase the diameter of the CIDH piles to the next common size rock core within the soil and bedrock zones, use unmodified rebar cages (result will be greater than 6" cover), and keep the existing specified pile tip elevations unchanged.
2	Question	**Groundwater** Reference Sheet 38 of 39, Warm Springs Creek Bridge – Log of Test Borings 4 of 5, 2 Lane Option. Reference Sheet 38 of 39, Warm Springs Creek Bridge – Log of Test Borings 4 of 5, 4 Lane Option. The referenced plan sheets show groundwater at roughly Elevation 1,275'. The lowest 90" CIDH Piling specified tip is Elevation 1,226'. Please confirm it is acceptable to install permanent casing (CMP or Class R Pipe) with a minimum inner diameter of 90", grouted in place in conformance with the Section 49-3.02B(5) of the 2010 Caltrans Standard Specifications, from OG to the top of bedrock elevation at each pile location. If the above request is found to be acceptable, please provide minimum casing requirements. If the above casing seals off the groundwater penetration into the shaft at the bedrock contact, and the remainder of the shaft can be excavated and completed without water infiltration, please confirm it is acceptable to construct the 90" piles in conformance with Section 49-3.01C of the 2010 Caltrans Standard Specifications, and that inspection tubes, synthetic slurry, and non-destructive testing will not be required in the dry shaft.
	Response	The installation of permanent casings would significantly reduce axial skin friction capacity of the piles, and would impact the lateral performance of the piles such that structural re-analysis of the bridge columns would be required along with geotechnical re-analysis of the pile capacity. The use of temporary casings, as recommended in the bridge foundation report, would avoid these issues. Additionally, it is anticipated that the bedrock surface will be sloping and irregular, which will make obtaining a water tight seal between a permanent casings and bedrock surface difficult, if not impossible to obtain. Therefore, the piles should be constructed by the slurry method, per the specifications.
3	Question	**Rock Cores** Reference the Bridge Foundation Report for the Warm Springs Creek Bridge by CH2MHILL, dated August 12, 2013. Are the rock cores available, or can they be made available, for viewing?
	Response	The cores are available for viewing at Riverside County Transportation Department. This office is located at 14th Street Transportation Annex, 3525 14th Street, Riverside, CA 92501. Tel: (951) 955-6780

Clinton Keith Road Construction Project – Phase 2
From Whitewood Road to Leon Road
In the City of Murrieta and French Valley Area
Project No. B2-0472

CONTRACTOR QUESTIONS AND RESPONSES		
4	Question	**Mini SID Requirement** Reference the Bridge Foundation Report for the Warm Springs Creek Bridge by CH2MHILL, dated August 12, 2013. Section 5.1 "CIDH Piles" of the referenced Bridge Foundation Report requires that bottom of all 90" CIDH Piling be inspected with a Mini-SID. The Section 49 of the Project Specifications do not require that a Mini-SID be used. Please confirm that the bottom of each 90" CIDH pile must be inspected with a Mini-SID, and that this expense must be borne by the Contractor.
	Response	See Addendum No. 1, Item No. 8
5	Question	Is it possible to get CAD files so that we may perform earthwork and quantity analysis for the site?
	Response	The County does not provide CAD files; however, there are cross sections available as supplemental information. See supplemental information items 12 and 13 for this project on our Notices Inviting Bids website, URL: http://rctlma.org/trans/Contractors-Corner/Notices-Inviting-Bids
6	Question	After review of the plans and specs, we have noticed that there are Cathodic Protection specs but no Cathodic listed on the plans. Can you please verify if there is Cathodic Protection required on this project?
	Response	Cathodic Protection System will not be required for EMWD's water pipe installed through the Warm Springs Creek Bridge. Should EMWD decide to include cathodic protection at a later date, then this work will be performed by EMWD's crew.
7	Question	I would just like to confirm that there is no set DBE goal for the Clinton Keith Road Construction Project.
	Response	A DBE % goal is not established for this project; however, the County encourages Contractors to afford competitive subcontracting opportunities to minority, women and disabled veterans firms where possible, in their contracting and procurement activities with the County of Riverside.
8	Question	Concerning the Eastern Municipal Water District portion at the Warm Springs Creek Bridge Crossing. The drawings call out for the 14" (15 ¼"od) steel cml x cmc water line to go through a 20"od steel casing with casing spacers, but with the cement motar coating they do not make casing spacers that will fit inside the 20"od casing. The casing should be at least 24"od steel pipe casing, so that the casing spacers to fit properly. Will the casing pipe be updated to 24" od?
	Response	The casing size will remain as shown on the plans. Refer to Section SC-1, 'Casing Spacers and Casing End Seal', of EMWD's special provisions, page 18 of 226 in Appendix "D" in the Special Provisions for the type of spacers to be used. Additionally, a brochure for Casing Spacers is made available as supplemental project information. Refer to Addendum 1, Item 10.
9	Question	Please reference Items #75/#209 (Wildlife Undercrossing Skylight). The plans reference D93A for the Pipe Connections. Are ladders required at each skylight?
	Response	Ladders are not required for the skylights.
10	Question	The proposed catch basins call for Kristar Flogard Plus Inserts. Where are these to be paid?
	Response	Refer to Addendum No. 1, Item 1. This item has been added to proposal. Also refer to Addendum No. 1 Item 9 for Special Provisions regarding this item.

Clinton Keith Road Construction Project – Phase 2
From Whitewood Road to Leon Road
In the City of Murrieta and French Valley Area
Project No. B2-0472

CONTRACTOR QUESTIONS AND RESPONSES		
11	Question	Please reference the backfill requirements on CT20 for the Wildlife Crossing. The plans call for "Elastizell" (or approved equal) and referenced Section B on Sheet CT8. There is no Section B on CT8. Can you please specify what an approved equal would be?
	Response	Section B "section view" is shown on Wildlife Overcrossing CT8. Plan view call out for Section B is also shown on sheet CT2. The manufacturer specifications are identified on sheet CT8 under the left arch. Material shall be installed per specifications (unit weight = 30 pcf, E = 22.6 ksi, etc.)
12	Question	Please review Bid Item # 96 (RSP, ¼ Ton).....we cannot seem to find this anywhere on the plans.
	Response	Item No. 96 has been deleted by Addendum No. 1
13	Question	Please review Bid Item # 98 (RSP, Facing). Does the RSP located on the bridge plans get paid in this item? Please review/advise.
	Response	Yes, this includes the RSP at the bridge as well as the drainage facilities. The quantity for Item No. 98 has been updated by Addendum No. 1.
14	Question	Please review Bid Item # 100 (RSP Fabric). Our quantity is substantially greater than the estimated quantity.
	Response	The quantity for Item No. 100 has been updated by Addendum No. 1.
15	Question	The bid date is rapidly approaching....was wondering if the County would entertain a one week postponement.
	Response	As of the issuance date of Addendum No. 1, this topic will be considered and discussed at the mandatory pre-bid meeting. Should the County of Riverside Transportation Department decide to extend the bid opening date, the new designated date and time for the receipt and opening of bids will be revised by an addendum.

Note: Additional Contractor's Questions and Responses to be provided on a subsequent addendum.

Juan C. Perez, P.E., T.E.
Director of Transportation and Land Management

COUNTY OF RIVERSIDE

TRANSPORTATION AND LAND MANAGEMENT AGENCY

Patricia Romo, P.E.
Assistant Director of Transportation

Transportation Department

ADDENDUM NUMBER 2

Dated July 9, 2015

to the
Specifications and Contract Documents
for the construction of

Clinton Keith Road Construction Project – Phase 2
From Whitewood Road to Leon Road
In the City of Murrieta and French Valley Area
Project No. B2-0472

Bids Due: **(Revised) Wednesday, July 22, 2015; 2:00 p.m.**
14th Street Transportation Annex
3525 14th Street; Riverside, CA 92501
(951) 955-6780

This Addendum is issued pursuant to the Instructions to Bidders, Item No. 8, of the Contract Documents for the reference project. This Addendum is issued as a supplement to the specification and special provisions for the referenced project. The revisions to the specifications shall become a part of the Contract Documents, and each bidder shall acknowledge receipt thereof on the Bid (Proposal). Bidders are directed to sign this addendum as acknowledged, and attach the signed addendum to the contractor's submitted proposal.

Note: During the advertisement period of this project, this document and attachments (if any) are available upon request at the office of the Transportation Department, and are available as a free download at the Transportation Department's website:

http://rctlma.org/trans/Contractors-Corner/Notices-Inviting-Bids

MODIFICATIONS / CLARIFICATIONS TO SPECIAL PROVISIONS:

Item 1: The new designated date and time for the receipt and opening of bids is revised as follows:

Wednesday, July 22, 2015; 2:00 p.m.
14th Street Transportation Annex
3525 14th Street; Riverside, CA 92501
(951) 955-6780

Prepared by: _____ 7/9/15
Joel Jimenez, PE; Senior Civil Engineer; Contracts/Bidding Unit

Acknowledged: _____ Date: _____
(Contractor)

JRJ:rr

3525 14th Street · Riverside, CA 92501 · (951) 955-6800
FAX (951) 955-3164