SUBMITTAL TO THE FLOOD CONTROL AND WATER CONSERVATION DISTRICT BOARD OF SUPERVISORS COUNTY OF RIVERSIDE, STATE OF CALIFORNIA

ITEM: 11.1
(ID # 17703)
MEETING DATE:
Tuesday, January 11, 2022

FROM : FLOOD CONTROL DISTRICT:

SUBJECT: FLOOD CONTROL DISTRICT: Approve Addenda to Plans and Specifications and Contract Documents; Accept Low Bid and Award the Contract for the Lakeland Village MDP Line H, Project No. 3-0-00020; Acceptance of Pre-Disaster Mitigation Competitive Grant Program Funding for the Performance Period of September 30, 2021 through September 29, 2024, District 1. [$13,539,484 Total Cost – District Funds 100%]

RECOMMENDED MOTION: That the Board of Supervisors:

1. Approve the Addendum No. 1 to the Plans and Specifications and Contract Documents issued prior to the October 20, 2021 bid opening;
2. Waive any minor bid irregularities, and accept the low bid submitted by the firm of KEC Engineering for $13,145,130 for the construction of the above-referenced project;
3. Award the contract to KEC Engineering, and authorize the Chair of the Board of Supervisors of the Riverside County Flood Control and Water Conservation District (District) to execute the Construction Agreement on behalf of the District;

Continued on page 2

ACTION:Policy

Jasbn Uhley, GENERAL MGR-CHF FLD CNTRL ENG 1/3/2022

MINUTES OF THE BOARD OF SUPERVISORS

On motion of Supervisor Jeffries, seconded by Supervisor Spiegel and duly carried by unanimous vote, IT WAS ORDERED that the above matter is approved as recommended.

Ayes:	Jeffries, Spiegel, Washington, Perez and Hewitt
Nays:	None
Absent:	None
Date:	January 11, 2022
xc:	Flood

Kecia R. Harper
Clerk of the Board
By: Deputy

SUBMITTAL TO THE FLOOD CONTROL AND WATER CONSERVATION DISTRICT BOARD OF SUPERVISORS
COUNTY OF RIVERSIDE, STATE OF CALIFORNIA

RECOMMENDED MOTION: That the Board of Supervisors:

4. Direct the Clerk of the Board to return three (3) copies of the executed Lakeland Village MDP Line H contract documents to the District;
5. Accept the Pre-Disaster Mitigation Competitive Grant Program funding awarded to the District from the Federal Emergency Management Agency (FEMA) for a total aggregate amount of $1,694,747.25 for the performance period of September 30, 2021 through September 29, 2024; and
6. Authorize the General Manager-Chief Engineer, Assistant Chief Engineer, or designee to take all necessary steps to implement the grant subaward, including, but not limited to, executing any amendments to extend the performance period, subject to approval by County Counsel.

FINANCIAL DATA	Current Fiscal Year:	Next Fiscal Year:	Total Cost:	Ongoing Cost
COST	$2,366,122	$7,887,078	$13,539,484	$0
NET COUNTY COST	$0	$0	$0	$0

SOURCE OF FUNDS:	Budget Adjustment: No
25130 947440 548200 Zone 3 Infrastructure 25130 947440 523220 Zone 3 License & Permits	For Fiscal Year: 21/22 - 23/24

C.E.O. RECOMMENDATION: Approve

BACKGROUND:

Summary

On September 14, 2021 (Agenda Item 11.3, MT#17046), the District's Board of Supervisors (Board) authorized the Clerk of the Board to advertise for construction contract bids for the Lakeland Village MDP Line H project (project).

The District opened bids for the project on October 20, 2021. The lowest responsible bid was received from KEC Engineering (Contractor) for the sum of $13,145,130. Two contractors submitted a bid in response to this call for bids. The bid documents have been reviewed by County Counsel and District staff. The bid was found to be responsive, and District staff recommends that the Board waive any minor irregularities found in the Contractor's bid.

On November 3, 2021, a Notice of Intent to Award the contract to Contractor was posted under Public Notices at www.rcflood.org. Pursuant to Article 3, Section 3.3 of the Instructions to Bidders, bidders are provided five (5) days to submit any protest of the intent to award. No protests were received by the deadline.

The Contractor has executed the construction contract and provided the bonds and insurance documents which meet the requirements of the contract.

The fiscal data listed includes this bid amount, plus the required Western Riverside County Multiple Species Habitat Conservation Plan mitigation payment (see Additional Fiscal Information section below).

This project will construct 7,177 feet of underground storm drain facility, including Line H, its associated laterals Line H-1 and Line H-2 and their appurtenant structures along Maiden Lane, Cottrell Boulevard, Coleman Avenue, Gillette, Zellar and Adelfa Streets, Landerville Boulevard and Anthony Avenue, located in the community of Lakeland Village. The Line H storm drain system will capture storm flows at four locations in the nearby foothills and convey them to Lake Elsinore. The project also includes a sediment/debris basin, street rehabilitation, conversion of a portion of Maiden Lane to an asphalt road and waterline improvements (see attached project description and location map).

County Counsel has reviewed the construction contract with exhibits and approved as to form.

Grant Funding

On October 18, 2021, the District was notified that FEMA approved grant funding through the Pre-Disaster Mitigation Competitive Grant Program in the amount of $1,694,747 to implement the Lakeland Village MDP Line H project. The expenditure period for these funds is from September 30, 2021 through September 29, 2024. This agenda item includes a recommendation from the District that the Board accept this grant funding.

CEQA Compliance

The Lakeland Village Master Drainage Plan Line H, Stage 1 project is part of the Lakeland Village Master Drainage Plan for which a Program Environmental Impact Report (PEIR) was certified by the District's Board on March 10, 2015 in Resolution No. F2015-09. The Lakeland Village Master Drainage Plan analyzed in the PEIR included Line H, Stage 1; however, since the certification of the PEIR, the alignment for Line H has changed slightly and a sediment basin has been added. As a result, an Addendum to the Final PEIR was prepared and approved by the District on February 6, 2018 (collectively referred to as the "CEQA Documents").

The CEQA documents adequately analyzed the impacts of the Board's actions and were previously approved, therefore, nothing further is required under the California Environmental Quality Act (CEQA). The actions will not result in any new significant environmental effects not identified in the documents; the actions will not substantially increase the severity of the environmental effects identified in the documents; no considerably different mitigation measures have been identified; and no mitigation measures found infeasible have become feasible. As a result, nothing further is required pursuant to CEQA.

Prev. Agn. Ref.: MT#17046 11.3 of 09/14/21 Advertise
MT#12134 11.2 of 05/19/20 Agreement
MT#10554 11.1 of 03/10/20 Agreement

Impact on Residents and Businesses

This project will construct drainage infrastructure to remedy ongoing flooding problems. This project is funded by ad valorem property tax revenue, FEMA grant funding, and a contribution from Riverside County Transportation. This project entails no new fees, taxes or bonded indebtedness. Due to the flooding hazard, the project area is currently mapped by FEMA as a Zone A 100-year floodplain as seen on Federal Insurance Rate Map (FIRM) No. 06065C2038G. Residents currently located within the FEMA floodplain suffer the mandatory financial burden of purchasing flood insurance. On December 26, 2019, FEMA approved a Conditional Letter of Map Revision that remove the entire FEMA Zone A floodplain after the construction of the project and approval of a Letter of Map Revision. Consequently, this project will enable revision of FIRM No. 06065C2038G in the impacted area resulting in removal of properties from the mapped floodplain. Owners with federally insured home loans will realize removal of any mandatory flood insurance premiums resulting in savings of several thousand dollars per year.

Additional Fiscal Information

Pursuant to the Implementing Agreement for the Western Riverside County Multiple Species Habitat Conservation Plan (MSHCP) executed on June 22, 2004, the Financial Data listed is comprised of the bid amount of $13,145,130 for Contractor, plus up to $394,353 (3% of bid) for MSHCP mitigation, for a total of $13,539,484 (bid plus 3% amount). The MSHCP Implementing Agreement requires the District to make a payment to the Western Riverside County Regional Conservation Authority for up to 3% of the total capital costs (bid amount described above) as required mitigation for the construction of flood control facilities. The actual mitigation payment that will be made by the District may be reduced based on acquisition of replacement habitat for the benefit of Covered Species, as defined in the Implementing Agreement and the MSHCP.

Contract History and Price Reasonableness

Pursuant to Public Contract Code 21091, invitation of sealed bids was solicited by advertising in print and digital media.

ATTACHMENTS:

1. Bid Summary/Abstract
2. Project Location Map
3. Contract Documents (Sheets XXV through XXXVI) and Certificate of Liability Insurance - 4 copies

DHG:mcv
P8\241089

SUBMITTAL TO THE FLOOD CONTROL AND WATER CONSERVATION DISTRICT BOARD OF SUPERVISORS
COUNTY OF RIVERSIDE, STATE OF CALIFORNIA

Jason Farin, Principal Management Analyst	1/3/2022	Gregory P. Priamos, Director County Counsel	1/3/2022

000001

BOARD OF SUPERVISORS

SPECIFICATIONS and CONTRACT DOCUMENTS

for the CONSTRUCTION of

LAKELAND VILLAGE MDP
LINE H

PROJECT NO. 3-0-00020

RIVERSIDE COUNTY, CALIFORNIA

RIVERSIDE COUNTY FLOOD CONTROL WATER CONSERVATION DISTRICT

FORM APPROVED COUNTY COUNSEL
BY KRISTINE BELL-VALDEZ 8/24/2021
DATE

SEP 14 2021 11.3 pus

JASON E. UHLEY
General Manager-Chief Engineer

1995 MARKET STREET
RIVERSIDE, CA 92501
951.955.1200
FAX 951.788.9965
www.rcflood.org
240653

RIVERSIDE COUNTY FLOOD CONTROL AND WATER CONSERVATION DISTRICT

October 13, 2021

ADDENDUM NO. 1
TO
Lakeland Village MDP Line H
RIVERSIDE COUNTY, CALIFORNIA

Bid Opening Date: Wednesday, October 20, 2021 at 2:00 p.m.

PROPOSAL

REPLACE PROPOSAL in its entirety (Pages XVI, XVIa, XVIb, XVIc, and XVId to accommodate the addition of a signature line on the bottom of Page XVId for acknowledgment of this Addendum.

DETAILED SPECIFICATIONS

REPLACE third paragraph of Section 14.15 Measurement to read:

Measurement for payment for the contract items Excavation; and Basin, Inlet and Outlet Excavation will be the number of cubic yards of material excavated as shown on the project drawings, adding any overexcavation within the limits specified or required by the Engineer. Longitudinal limits of the excavations terminate at a vertical plane at the limits of pipe or structures, measured along the longitudinal axis of the pipe or structure.

DRAWINGS

REPLACE Sheet Nos. 1, 36, 38, and 52 of Drawing No. 3-0207 in its entirety.

RESPONSE TO QUESTIONS

Attached to this Addendum is Response to Questions.

****

NOTE: Bidders are required to acknowledge receipt of all addenda at the bottom of **Page XVId** of the PROPOSAL. Failure to acknowledge all addenda on the bid form may cause the bid to be considered not responsive to the invitation, which would require rejection of the bid.

JASON E. UHLEY
General Manager-Chief Engineer

Attachment

RESPONSE TO QUESTIONS

Lakeland Village MDP Line H

This document has been prepared to clarify elements of the Contract Documents for the above-referenced project for which the Riverside County Flood Control and Water Conservation District has received questions.

Question 1	Can the District furnish the plans in electronic format with elevations? If not, can you furnish Plans with vectorized pdf. This will help the contractors with take off accuracy.
Answer	***The Riverside County Flood Control and Water Conservation District (District) does not furnish plans in electronic format with elevations. An updated vectorized PDF of the originally published set of plans was uploaded on www.eBidboard.com on October 4, 2021.***
Question 2	Section 14.9 of the detailed specifications states that either mechanical backfill or CLSM may be used as backfill on the project. Section 14.13 (Bid Item 13) set the requirements for CLSM materials and placement. Sheet Number 52 of 65 clearly shows CLSM as backfill to the top of storm drain pipes and backfill for portions of precast drainage structures. Please clarify if CLSM is the ONLY option to backfill storm drain pipe and precast structures.
Answer	***RCFC&WCD Standard Drawing No. M815 provides the zones where 'CLSM' is required and where 'Backfill' applies. In the zones identified for CLSM, CLSM is required. In zones where Backfill is specified, Section 14.9 of the Detailed Specifications provides that the Contractor may choose mechanically compacted backfill material or CLSM; however, regardless of such choice, the Backfill zone will be paid for in accordance with the bid unit price for Bid Item No. 11 Backfill. See also revised project drawings Sheet 52 included in Addendum No. 1.***
Question 3	Please clarify if truck tickets from Ready-Mix trucks will be used to determine payment quantities for Bid Item 13 - CLSM.
Answer	***Truck tickets will not be used to determine bid payment quantities for CLSM. Section 14.15 directs the Contractor how the CLSM will be measured for payment. "Measurement for payment for the contract item Controlled Low Strength Material (CLSM) will be the number of cubic yards of material placed in final position as specified and within the limits of the payment lines as shown on the drawings."***
Question 4	The geotechnical report (Appendix C) showed a site plan with boring logs and locations of seismic refraction line surveys. Could the data from the seismic refraction surveys be provided? Please provide any other data from the Geotek geotechnical report.
Answer	***The soils report can be downloaded from the link provided in Section 7 – Soils Report of the Special Provisions.*** https://content.rcflood.org/documents/Soils-Report-300002001.pdf
Question 5	Could the contact information for the geotechnical engineer at Geotek be provided?
Answer	***GeoTek, Inc. contact information is provided at the beginning of the soils report on the title and signature pages.***

Question 6	We would like to request that the Rock Excavation item be changed to an allowance item. There currently is not enough data provided to make an accurate assumption as to whether the rock is localized boulders or hard rock formations. This data will impact means, methods and bid costs.
Answer	***The basis for payment for Rock Excavation will remain as defined in Sections 14.6 and 14.15 of the Detailed Specifications. For bidding purposes, an assumed volume of 1,000 cubic yards of Rock Excavation was included in the project quantity estimate. See also the response to Question 4 above for information that is available in the Soils Report.***
Question 7	Is there a minimum Over-Excavation depth required for the sedimentation basins and Inlet/Outlet Structures?
Answer	***See revisions to project drawings Sheet Nos. 36 and 38 included in Addendum No. 1, which clarify a minimum of two feet of overexcavation for preparation of the embankment foundation on the north side of the sediment basin. The exact depth of the overexcavation shall be determined by the geotechnical engineer based on field conditions. The total excavation required will be quantified and paid for as part of Bid Item No. 7 Basin, Inlet and Outlet Excavation. See also clarification in Section 14.15, also included in Addendum No. 1.*** ***No overexcavation is anticipated for the bottom and sideslopes of the sediment basin, inlet/outlet, and other structures unless otherwise directed by the Engineer. Subgrade preparation is required for concrete structures, street pavement, and other structures as outlined in Section 14 and elsewhere in the Detailed Specifications.***
Question 8	If Over-Excavation is directed by The Engineer is it paid for in Bid Item Number 7 as a quantity increase?
Answer	***Yes, if additional overexcavation is directed by the Engineer, it will be paid, as applicable, under Bid Item No. 5 Excavation or Bid Item No. 7 Basin, Inlet and Outlet Excavation.***

SPECIFICATIONS and CONTRACT DOCUMENTS for the CONSTRUCTION of

LAKELAND VILLAGE MDP LINE H

PROJECT NO. 3-0-00020

These specifications and contract documents have been prepared under the direction of the following Registered Civil Engineers:

Recommended By:

Design Engineer — Date: Aug. 12, 2021

REGISTERED PROFESSIONAL ENGINEER
CLAUDIO MANUEL PADRES
No. 70355
CIVIL
STATE OF CALIFORNIA

Approved By:

General Manager-Chief Engineer — Date: 8/12/2021

REGISTERED PROFESSIONAL ENGINEER
JASON E. UHLEY
No. 59795
CIVIL
STATE OF CALIFORNIA

TABLE OF CONTENTS

GENERAL PROVISIONS

TABLE OF CONTENTS - CONTD.

GENERAL PROVISIONS contd.

TABLE OF CONTENTS - CONTD.

GENERAL PROVISIONS contd.

SPECIAL FEDERAL PROVISIONS

TABLE OF CONTENTS - CONTD.

SPECIAL FEDERAL PROVISIONS contd.

SPECIAL PROVISIONS

TABLE OF CONTENTS - CONTD.

SPECIAL PROVISIONS contd.

DETAILED SPECIFICATIONS

TABLE OF CONTENTS - CONTD.

DETAILED SPECIFICATIONS contd.

TABLE OF CONTENTS - CONTD.

DETAILED SPECIFICATIONS contd.

TABLE OF CONTENTS - CONTD.

DETAILED SPECIFICATIONS contd.

TABLE OF CONTENTS - CONTD.

DETAILED SPECIFICATIONS contd.

TABLE OF CONTENTS - CONTD.

DETAILED SPECIFICATIONS contd.

TABLE OF CONTENTS - CONTD.

DETAILED SPECIFICATIONS contd.

NOTICE INVITING BIDS TO CONTRACTORS

Riverside County Flood Control and Water Conservation District hereinafter called "District", invites sealed proposals for construction of:

Lakeland Village MDP Line H
Project No. 3-0-00020
located in Riverside County, California

On or after **September 14, 2021**, the Specifications and Contract Documents may be examined and obtained through www.ebidboard.com. The Specifications and Contract Documents may also be viewed at the District's office at 1995 Market Street, Riverside, California, and purchased from the District for **$60.00** per set if picking up and **$65.00** per set if requesting to be mailed. The Specifications and Contract Documents are also offered on CD-ROM for $10.00 if picking up and $15.00 if requesting to be mailed. No refunds.

Each proposal must be accompanied by a bid security in the form of a certified check, cashier's check or bid bond equal to ten percent (10%) of the amount bid, payable to the Riverside County Flood Control and Water Conservation District as a guarantee that the Contractor will, if awarded the contract, execute a satisfactory contract and furnish the required bonds and proof of insurance.

Bid Proposals must be placed in a sealed envelope clearly marked "Bid Proposal". Bid Proposals must be in accordance with the instructions and other Contract Documents and filed with the District by **2:00 p.m. on Wednesday, October 20, 2021** at 1995 Market Street, Riverside, California, which time and place are fixed for the public opening of bids. No mandatory pre-bid site meeting is scheduled for this project.

Any questions, requests for information and requests for clarification or interpretation of the Specifications must be submitted in writing to the District attention:

Entcho Anguelov
Email: EAnguelo@rivco.org
OR
Hard Copy: Riverside County Flood Control and Water Conservation District
1995 Market Street, Riverside, CA 92501
Attn: Entcho Anguelov

Questions or requests must be received **no later than 5:00 p.m. on Monday, October 11, 2021**.

Pursuant to Labor Code Section 1771.1, any Contractor bidding and subcontractors to be listed on a Bid Proposal are subject to Public Contract Code Section 4104 and shall not be eligible to bid unless currently registered with the Department of Industrial Relations and qualified to perform public works pursuant to Labor Code Section 1725.5. No Contractor or subcontractor may be awarded a public works project or enter into a Contract without proof of current registration to perform public works.

General prevailing rate of per diem wages and general prevailing rate of per diem wages for holiday and overtime work, including employer payments for health and welfare, pension, vacation, apprentices and similar purposes for each craft, classification or type of workman needed for execution of

contracts under the jurisdiction of District have been obtained by the Board of Supervisors of the District from the Director of Industrial Relations of the State of California for the area where the work is to be done. The said determinations are on file in the principal office of the District, and will be made available to any interested person upon request.

THIS PROJECT IS SUBJECT TO COMPLIANCE MONITORING AND ENFORCEMENT BY THE DEPARTMENT OF INDUSTRIAL RELATIONS. The awarded prime Contractor shall post job site notices, including a copy of the prevailing rate of per diem wages determinations made by the Director for the Department of Industrial Relations and other notices prescribed by regulations and comply with the provisions of the California Labor Code, including, without limitation, Sections 1771.4, 1773.1, 1773.2, 1774, 1775, 1776, and 1777.5.

Contractor shall furnish the records specified in Labor Code Section 1776, including but limited to the certified payroll records, directly to the Labor Commissioner for the Department of Industrial Relations.

Substitution of securities for any moneys withheld by District shall be permitted as provided for by Section 22300 of the California Public Contract Code.

Contractors submitting proposals for this project shall have an active and in good standing Class "A" Contractor's license from the State of California in order to be considered eligible for the contract award. The license(s) shall remain active and in good standing throughout the entire duration of the project.

This project is wholly or partially federally funded and subject to certain requirements including Affirmative Action requirements, Executive Order #11246, equal employment opportunity and others. The aforementioned are described in the Special Federal Provisions section of this bid document.

With the submittal of the Bid Proposal, the Contractor shall submit for approval by the District documented evidence of satisfaction of all of the Bidder Qualifications listed above. As part of this submittal, Experience Statement shall be completed indicating at a minimum, the name, address, and phone number of the project owner and owner's representative, the location of the project, the amount of material installed, and completion date.

Dated: September 14, 2021

RIVERSIDE COUNTY FLOOD CONTROL
AND WATER CONSERVATION DISTRICT

KECIA HARPER
Clerk of the Board

BY Yolanda Russo
Deputy

INSTRUCTIONS TO BIDDERS

ARTICLE 1
GENERAL CONDITIONS

1.1 DEFINITIONS

Capitalized terms used on the Contract Documents shall have the meanings assigned to them in the Construction Agreement, Bonds, other Forms, General Provisions, and Specifications and Contract Documents that are included in the Contract Documents. Capitalized terms not so defined shall have the meanings assigned to them in, or if none is assigned as reasonably interpreted according to the context of, the portion of the Contract Documents where such terms are used.

1.2 QUANTITIES

The amount of work to be done or materials to be furnished under the contract as noted in the proposal, are but estimates and are not to be taken as an expressed or implied statement that the actual amount of work or materials will correspond to the estimate.

The right is reserved to increase or decrease or to entirely eliminate certain items from the work or materials if found desirable or expedient.

The Contractor will be allowed no claims for anticipated profits, loss of profits or for any damages of any sort because of any difference between the estimated and the actual amounts of work done, or materials furnished or used in the completed project.

The Contractor is cautioned against unbalancing of his bid by prorating his overhead into one or two items only when there are a number of items on the schedule. The overhead and indirect charges should be prorated on all items in schedule.

1.3 AGREEMENT OF FIGURES

If the unit prices and the total amounts named by the bidder in the proposal do not agree, the unit prices alone will be considered as representing the bidder's intention.

1.4 "OR EQUAL"

Pursuant to Division 2, Chapter 3, Article 5, commencing at Section 3400 of the Public Contract Code, all specifications shall be deemed to include the words "or equal", provided, however, that permissible exceptions or other requirements shall be specifically noted in the specifications. Any "equal" proposed by the Contractor must be described in the Contractor's Proposal.

1.5 INSPECTION OF SITE

Bidders must examine the site and acquaint themselves with all conditions affecting the work.

Information derived from maps, plans or specifications, or from the Chief Engineer or his assistants, will not relieve the successful bidder from properly carrying out all the terms of the written contract.

By the submitting of a proposal, the bidder will be held to have personally examined the site and the drawings, to have carefully read the specifications and to have satisfied himself as to his ability to meet all the difficulties attending the execution of the proposed contract before the delivery of his proposal and agrees that if he is awarded the contract, he will make no claim against the District and the County of Riverside, (including their respective officers, districts, special districts and departments, their respective directors, officers, Board of Supervisors, elected and appointed officials, employees, agents and representatives) based on ignorance or misunderstanding of the contract provisions.

1.6 QUALIFICATIONS OF BIDDERS

No proposal will be accepted from a Contractor who is not licensed under laws of California, as evidenced by the submittal of the Statement of Licensure. No award will be made to any bidder who cannot give satisfactory assurance to the District as to his own ability to carry out the contract, both from his financial standing and by reason of his previous experience as a Contractor on work of the nature contemplated in the contract. The bidder is required to submit his record of work of similar nature to that proposed under these specifications, and unfamiliarity with the type of work may be sufficient cause for rejection of a proposal.

A bid shall be rejected and a bidder shall be disqualified to bid on a District project if the bidder or any officer, manager, partner or shareholder of the bidder within the eighteen month period prior to the bid date shall have been an officer or employee of the District.

A bid shall be rejected and a bidder shall be disqualified to bid on a District project if the bidder is subject to Debarment or Suspension as defined in Special Federal Provisions Section 1.6. Additionally, the bidder shall verify that none of the Contractor's principals (defined at 2 C.F.R. § 180.995) or its affiliates (defined at 2 C.F.R. § 180.905) are excluded (defined at 2 C.F.R. § 180.940) or disqualified (defined at 2 C.F.R. § 180.935).

1.7 CONTRACTOR REGISTRATION

In accordance with the Labor Code (especially Sections 1725.5 and 1771.1), prior to submitting a proposal to District, all Contractors and Subcontractors must register as a "Public Works Contractor" with the Department of Industrial Relations (DIR) using the online application. Contractor's and Subcontractor's DIR Registration Number must be listed in the appropriate space on Contractor's Proposal form. This project is subject to compliance monitoring and enforcement by the DIR.

1.8 BALANCE BID

The Contractor is cautioned against unbalancing of its Bid by including its overhead and profit into one or two items only when there are a number of items on the schedule. The overhead and indirect charges should be prorated on all items in the schedule.

1.9 ANTI-DISCRIMINATION

It is the policy of the District that, in connection with all work performed under the Construction Agreement, there be no discrimination against any prospective or active employee engaged in the Work

because of race, color, ancestry, national origin, religious creed, sex, age, marital status, or sexual preference. The Contractor agrees to comply with applicable Federal and California laws including, but not limited to, the California Fair Employment Practice Act, beginning with Labor Code Section 1410, and Labor Code Section 1735. In addition, the Contractor agrees to require like compliance by any subcontractors employed on the Work.

1.10 MINIMUM AND PREVAILING WAGES

Minimum wage rates for this project, as predetermined by the Secretary of Labor, are set forth in the General Provisions. If there is a difference between these predetermined minimum wage rates and the prevailing wage rates determined by the State for similar classifications of labor, the Contractor and his subcontractors shall pay not less that the higher wage rate.

Pursuant to Section 1773 of the Labor Code, the General prevailing rates of wages have been determined and these are listed in the State of California Department of Industrial Relations publication General Prevailing Wage Rates, effective on the date of this notice.

1.11 FEDERAL-AID IMPROVEMENT

The improvement contemplated in the performance of this contract is a Federal-Aid improvement over which the State of California shall exercise general supervision. The State of California, therefore, shall have the right to assume full and direct control over this contract whenever the State of California, at its sole discretion, shall determine that this responsibility to the United States so requires. In such cases, the State Contract Act will govern.

1.12 REQUIRED SUBMITTALS

There are a number of forms and other documents required as submittals by the Bidder during the various stages of the project. The following table provides a checklist of submittals required by the Bidder as requested in the Contract Documents. Bidders shall be made aware that the documents listed in the following table do not guarantee a complete submittal package.

	BID DOCUMENT	SUBMITTAL TIMEFRAME
☐	Contractor's Proposal	with Bid Proposal
☐	List of Subcontractors	with Bid Proposal
☐	Experience Statement (Minimum of 5 References)	with Bid Proposal
☐	Statement of Licensure	with Bid Proposal
☐	Non-Collusion Declaration	with Bid Proposal
☐	Iran Contracting Act Certification	with Bid Proposal
☐	Bid Bond (10% of Contract Price)	with Bid Proposal
☐	Byrd Anti-Lobbying Amendment Certification	with Bid Proposal
☐	Construction Agreement	within **7 days** of Notice of Intent to Award
☐	Performance Bond (100% of Contract Price)	within **7 days** of Notice of Intent to Award
☐	Payment Bond (100% of Contract Price)	within **7 days** of Notice of Intent to Award
☐	Workers' Compensation Contractor Certificate	within **7 days** of Notice of Intent to Award
☐	Declaration of Sufficiency of Funds	within **7 days** of Notice of Intent to Award
☐	Certificates of Insurance	within **7 days** of Notice of Intent to Award
☐	Construction Schedule	within **14 days** of Notice of Intent to Award
☐	Schedule of Values	within **14 days** of Notice of Intent to Award
☐	Affirmative Action Compliance Program (for Contractors with 50+ Employees)	within **30 days** of Award of Contract

ARTICLE 2
BIDDING PROCEDURES

2.1 PROPOSAL FORMS

Attention of all bidders is called to all bid proposal forms attached hereto. Bidders are cautioned that all bid proposals submitted must be accompanied by all forms properly executed.

2.2 SUBMISSION OF BID PROPOSALS

All copies of the Contractor's Proposal, Bid Security, and other Bid Proposal Submittals shall be enclosed by the Bidder in a sealed opaque envelope. Said envelope, as well as any other, outer envelope or packaging in which said envelope may have been placed by Bidder or the carrier for delivery, shall be addressed and delivered as provided in the Notice Inviting Bids to Contractors.

2.3 TIMELY RECEIPT

The Bidder assumes full and sole responsibility for timely receipt of its Bid Proposal, including its Bid Security and all other Bid Submittals, at the location designated in the Notice Inviting Bids to Contractors.

2.4 DELIVERY METHOD OF BID PROPOSAL

Submittal of Bid Proposals shall be by hand delivery or mail, only. Oral, telephonic, telegraphic, facsimile or other electronic transmission is not permitted.

2.5 INVALID BID PROPOSALS

Bid Proposals submitted by fax or e-mail and those which fail to reach the place fixed for opening of Bid Proposals prior to the date and hour set for opening same will not be considered.

2.6 BID SECURITY:

Bid Security. Each Bid shall be accompanied by a Bid Security in the form of 1) cash, 2) a certified or cashier's check made payable to the Riverside County Flood Control and Water Conservation District, or 3) a Bid Bond (using the form of Bid Bond included in the Bidding Documents) issued by an Admitted Surety, in an amount equal to at least ten percent (10%) of the Bid Amount, as a guarantee that the Bidder, if awarded the Construction Contract, will enter into a Construction Contract with the District and furnish the Performance Bond, Payment Bond and other Post-Award Submittals required by the Bidding Documents. Should the Bidder refuse to enter into the Construction Contract or fail to furnish the Performance Bond, Payment Bond or any other Post-Award Submittals within the required timeframes as applicable, then the Bid Security shall be forfeited to the District in an amount equal to the difference between the amount of Bidder's Bid Amount and the amount for which the District may procure the work from another Bidder plus the costs to the District of redrafting, redrawing and republishing the Bidding Documents.

Retention by District. The District will have the right to retain the Bid Security of any Bidder to whom an Award is being considered until either (1) the Construction Contract has been executed and the Performance Bond, Payment Bond and other Post-Award Submittals have been furnished, or (2) all Bids have been rejected.

Return of Proposal Guarantees. Within ten (10) days after the award of the contract, the District will return the proposal guarantees accompanying such of the proposals as are not considered in making the award. All other proposal guarantees will be held until the contract has been fully executed, after which they will be returned to the respective bidders whose proposal they accompany.

2.7 SUBLETTING AND SUBCONTRACTING

Bidders are required, pursuant to the Subletting and Subcontracting Fair Practices Act (commencing with Section 4100 of the Public Contract Code) to list in their proposal the name and location of place of business of each subcontractor who will perform work or labor or render services in or about the construction of the work or improvement or a subcontractor who specially fabricates and installs a portion of the work or improvement according to detailed drawings contained in the Plans and Specifications, in excess of one-half (½) of one percent (1%) of the prime Contractor's total bid. Failure to list a subcontractor for a portion of the work means that the prime Contractor will do that portion of the work. Contractor shall list only one subcontractor for each portion as is defined by the Contractor in the Contractor's Bid Proposal.

2.8 DISCREPANCIES AND OMISSIONS

Discrepancies, omissions, ambiguities, or requirements likely to cause disputes between trades and similar matters shall be promptly brought to the attention of the Engineer. When appropriate, Addenda will be issued by the District. No communication by anyone as to such matters except by an Addendum affects the meaning or requirements of the Contract Documents.

2.9 ADDENDA

Interpretations, corrections, clarifications and changes to the Contract Documents will be made by Addenda. District reserves the right to issue Addenda to the Contract Documents at any time prior to the time set to open bids. Each potential bidder shall leave with the District its name and address for the purpose of receiving Addenda. District will cause copies of Addenda to be mailed or delivered to such names at such addresses. To be considered, a Contractor's proposal must list and take into account all issued Addenda.

Addenda will be transmitted by District to all prospective Bidders who (1) attended and signed in at the Mandatory Pre-Bid Site Review meeting (if any); (2) are plan holders; or (3) have submitted a written request to District for notice of Addenda at Riverside County Flood Control, 1995 Market Street, Riverside, CA 92501, including in such request the Bidder's name and address for mailing. Each potential Bidder shall leave with the District its name, address, email, and fax number for the purpose of receiving Addenda. To be considered, a Contractor's Proposal must list and take into account all issued Addenda. Failure of the Bidder to receive any Addendum shall not relieve the Bidder from any of its obligations under its Contractor's Proposal. The costs of performance by Bidder of all items of Work and other obligations contained in all Addenda issued by the District shall be deemed included in the amount of the

Contractor's Proposal. The Bidder shall identify and list in its Contractor's Proposal all Addenda received and included by the District as a basis for determining its Bid Proposal non-responsive.

2.10 RESPONSE TO QUESTIONS

Any questions or requests for information must be submitted in writing to the District attention:

Entcho Anguelov
Email: EAnguelo@rivco.org
OR
Hard Copy: Riverside County Flood Control and Water Conservation District
1995 Market Street, Riverside, CA 92501
Attn: Entcho Anguelov

Questions or requests must be received **no later than 5:00 p.m. on Monday, October 11, 2021**.

2.11 POSTPONEMENT

The District reserves the right to postpone the time and date for the public opening of bids as specified in the Notice Inviting Bids to Contractors by issuance of an Addendum to the Contract Documents at any time prior to the specified time and date for public opening of bids.

2.12 REJECTION OF BID PROPOSALS CONTAINING ALTERATIONS, ERASURES OR IRREGULARITIES

Bid Proposals may be rejected if they show any alterations of form, additions not called for, conditional Bid Proposals, incomplete Bid Proposals, erasures, or irregularities of any kind. Erasures or interlineations in the Bid Proposal must be explained or noted over the signature of the Bidder. The District may determine as unresponsive any Bid Proposal in which any statement or representation made or incorporated by reference in the Contractor's Proposal, including any Bid submittal comprising the Bid Proposal, is false, incorrect or materially incomplete and misleading.

2.13 DISQUALIFICATION OF BIDDERS

More than one proposal from an individual, a firm or partnership, a corporation or an association under the same or different names will not be considered. Reasonable ground for believing that any bidder is interested in more than one proposal for the work contemplated will cause the rejection of all proposals in which such bidder is interested. If there is any reason for believing that collusion exists among the bidders, none of the participants in such collusion will be considered in awarding the contract. Proposals in which the prices obviously are unbalanced may be rejected.

2.14 WITHDRAWAL OF PROPOSALS

Any proposal may be withdrawn at any time prior to the hour fixed in the Notice to Contractors for the opening of proposals, provided that a request in writing, executed by the bidder or his duly authorized representative, for the withdrawal of such proposal, is filed with the Chief Engineer. The withdrawal of a proposal shall not prejudice the right of a bidder to file a new proposal.

2.15 IRAN CONTRACTING ACT

In accordance with Public Contract Code Section 2204(a), prior to bidding on, submitting a proposal or executing a contract or renewal for a District contract for goods or services of $1,000,000 or more, a Contractor must either:

a) Certify it is not on the current list of persons engaged in investment activities in Iran created by the California Department of General Services ("DGS") pursuant to Public Contract Code Section 2203(b) and is not a financial institution extending twenty million dollars ($20,000,000) or more in credit to another person, for 45 days or more, if that other person will use the credit to provide goods or services in the energy sector in Iran and is identified on the current list of persons engaged in investment activities in Iran created by DGS; or
b) Demonstrate it has been exempted from the certification requirement for that solicitation or contract pursuant to Public Contract Code Section 2203(c) or (d).

To comply with this requirement, please insert your Contractor or financial institution name and Federal ID Number (if available) and complete one of the options on Page XXII. Please note: California law establishes penalties for providing false certifications, including civil penalties equal to the greater of $250,000 or twice the amount of the contract for which the false certification was made; contract termination; and three-year ineligibility to bid on contracts. (Public Contract Code section 2205.)

2.16 PUBLIC OPENING OF PROPOSALS

Proposals will be opened and read publicly at the time and place indicated in the Notice Inviting Bids to Contractors. Bidders or their authorized agents are invited to be present.

ARTICLE 3
CONSIDERATION OF BIDS

3.1 BASIS OF AWARD

The award of the Contract, if it be awarded, will be to the lowest responsible and qualified Bidder based upon all Bid items.

3.2 NOTICE OF INTENT TO AWARD

Within thirty (30) days following public opening and reading of Bids, the District will issue a Notice of Intent to Award identifying the name of the Bidder to whom the District intends to Award the Construction Contract. Such notice will be posted under Public Notices at rcflood.org. The District may, in its sole and absolute discretion, elect to extend the time for its issuance of its Notice of Intent to Award.

3.3 BID PROTESTS

Any Bidder submitting a Bid Proposal to the District may file a protest of the District's proposed Award of the Construction Contract provided that each and all of the following are complied with:

1. The bid protest is in writing.

2. The bid protest is both: (1) filed with and received by David Garcia at the following address, 1995 Market Street, Riverside, California, not more than five (5) days following the date of issuance of the Notice of Intent to Award. Failure to timely file and serve the bid protest as afore stated shall constitute grounds for the District's denial of the bid protest without consideration of the grounds stated therein.

3. The written bid protest sets forth, in detail, all grounds for the bid protest, including without limitation all facts, supporting documentation, legal authorities and argument in support of the grounds for the bid protest. Any grounds not set forth in the bid protest shall be deemed waived. All factual contentions must be supported by competent, admissible and credible evidence. Any bid protest not conforming to the foregoing shall be rejected as invalid.

4. Provided that a bid protest is filed in conformity with the foregoing, the General Manager-Chief Engineer, or such individual(s) as may be designated by the General Manager-Chief Engineer in his/her discretion, shall review and evaluate the basis of the bid protest, and shall provide a written decision to the Bidder submitting the bid protest, either concurring with or denying the bid protest. The written decision of the General Manager-Chief Engineer or his/her designee shall be final, unless overturned by the Board of Supervisors.

5. An inadvertent error in listing the California contractor license number or DIR public works contractor registration number for a subcontractor shall not be grounds for filing a bid protest or grounds for considering the bid nonresponsive if the corrected number is submitted to the District within 24 hours after the bid opening and provided the corrected number corresponds to the submitted name and location for that subcontractor.

3.4 AWARD OF CONTRACT

The right is reserved to reject any and all proposals and to waive technical defects as the best interests of the District may require. The award of the Contract, if it be awarded, will be to the lowest responsible bidder whose proposal complies with the requirements prescribed. The award, if made, will be made within sixty (60) days after the opening of the proposals. All proposals will be compared on the basis of the Engineer's estimate of the quantities of work to be done.

ARTICLE 4
POST-NOTICE OF INTENT TO AWARD

4.1 POST-NOTICE OF INTENT TO AWARD SUBMITTALS

Within the time periods set forth below, the successful Bidder identified in the Notice of Intent to Award as the successful Bidder shall submit the following additional Post-Notice of Intent to Award submittals, completed and signed in the manner required by the Contract Documents, to the District at 1995 Market Street, Riverside, California 92501:

4.1.1 Within **seven (7) days** after issuance by District to Bidder of the Notice of Intent to Award and prior to contract award, such Bidder shall submit to the District the following:

(1) Construction Agreement duly executed by the authorized delegate of the Contractor;
(2) Performance Bond and Payment Bond (issued by Surety), as set forth in Section 4.2 below;
(3) Evidence of Insurance, as specified by the Contract Documents;
(4) Workers' Compensation Certificate, in the form specified by the Contract Documents; and
(5) Declaration of Sufficiency of Funds (required only if the Bidder has not entered into a collective bargaining agreement covering the workers to be employed for performance of the Work), in the form specified by the Contract Documents.

4.1.2 Within **fourteen (14) days** after issuance by District to Bidder of the Notice of Intent to Award and prior to commencement of the Work, such Bidder shall submit to the District the following:

(1) Construction Schedule, prepared by Bidder in the manner required by Section 2.02 of the General Provisions; and
(2) Schedule of Values, prepared by Bidder in the manner required by the Specifications and Contract Documents.

4.2 CONTRACT SECURITY – PERFORMANCE BOND AND PAYMENT BOND

The Contractor shall furnish two (2) surety bonds, each in quadruplicate, one as a security for the faithful performance of the contract in the amount equal to one hundred percent (100%) of the contract price, and one as security for the payment of all persons performing labor and furnishing materials in connection with the contract in an amount equal to one hundred percent (100%) of the Contract Price. The penal sums of the Performance Bond and Payment Bond shall each be initially in the amount of one hundred percent (100%) of the Contract Price. The penal sum may be required to be increased for Contract Adjustments increasing the Contract Price that are authorized by Change Order. All bonds must be submitted on forms provided by the District. Bonds submitted in any other form will not be accepted.

Prior to the execution of the Contract, the Contractor shall furnish to the District the required, original, Performance and Payment Bonds, issued by an admitted surety and shall have a A.M. Best's Insurance Rating of A VIII (A:8) or better rated surety company, authorized to do business in the State of California. The Bonds shall be executed by an authorized attorney-in-fact for the Surety company and his/her original or certified copy Power of Attorney must be attached to the Bonds. Premiums for Bonds shall be paid by the Contractor. Notary acknowledgements of the signatures of the Contractor and Surety(ies) is required. The attorney-in-fact who executes the required Performance Bond and Payment Bond on behalf of the Surety shall affix thereto a certified and current copy of the Power of Attorney authorizing such attorney-in-fact to execute same on behalf of such Surety. Should any Surety on the Performance Bond or Payment Bond be deemed unsatisfactory by the District, Contractor shall upon notice promptly substitute new bonds satisfactory to the District.

If the Performance Bond provides for a one-year warranty, a separate Maintenance Bond is not necessary. If the warranty period specified in the contract is for longer than one year, a Maintenance Bond equal to ten percent (10%) of the contract price is required. Bonds shall be duly executed by a responsible corporate surety, authorized to issue such bonds in the State of California and secured through an authorized agent with an office in California.

4.3 FORFEITURE FOR FAILURE TO POST SECURITY AND EXECUTE AGREEMENT

In the event the Bidder, to whom an award will be made, fails or refuses to post the required bonds and provide the required certificates of insurance and fails to return executed copies of the Construction Agreement within seven (7) days after the prescribed forms are presented to it for signature, the District may declare the Bidder's Bid deposit or bond forfeited as damages caused by the failure of the Bidder to post such security and execute such copies of the Construction Agreement and may award the Work to the next lowest responsible Bidder, or may call for new bids.

CONTRACTOR'S PROPOSAL

TO THE BOARD OF SUPERVISORS OF THE RIVERSIDE COUNTY FLOOD CONTROL AND WATER CONSERVATION DISTRICT:

The undersigned hereby declare(s):

(a) That the only persons or parties interested in this proposal as principals are the following:

Name of Company (and dba if applicable) ("Contractor"): KEC Engineering

James Elfring, President

Scott Pfeiffer, Secretary, Treasurer

Charles Hickman, Manager

(If the Contractor is a corporation, give the name of the corporation and the name of its president, secretary, treasurer, and manager. If a copartnership, give the name under which the copartnership does business, and the names and addresses of all copartners. If an individual, state the name and address under which the contract is to be drawn.)

(b) That this proposal is made without collusion with any other person, firm or corporation.

(c) That he has carefully examined the location of the proposed work, and has familiarized himself with all of the physical and climatic conditions, and makes his proposal solely upon his own knowledge.

(d) That he has carefully examined the attached specifications as referred to, and the plans, and makes this proposal in accordance therewith.

(e) That, if this proposal is accepted, he will enter into a written contract with the Riverside County Flood Control and Water Conservation District, Riverside, State of California.

(f) That he proposes to enter into such contract and to accept in full payment for the work actually done thereunder the prices shown in the attached schedule. It is understood and agreed that the quantities set forth are but estimates, and that the unit prices will apply to the actual quantities whatever they may be, subject to such adjustments and alterations as elsewhere provided for in the Contract Documents.

As bid security, accompanying this proposal is a certified or cashier's check or bid bond payable to the order of the Riverside County Flood Control and Water Conservation District, Riverside, California, in the sum of

10% of base bid amount Dollars ($_____)

THE REQUIRED REFERENCES AND OTHER REQUIRED DOCUMENTS MUST BE ATTACHED TO THIS BID PROPOSAL

It is understood and agreed that should the Contractor within seven (7) days after the prescribed forms are presented to him for signature fail to return the contract and furnish acceptable surety bond and insurance, then, at the discretion of the District, the proceeds of said check shall become the property of the District, the Contractor shall be found in default and the project may be awarded to another contractor. The bid bond or check shall be held subject to payment to the District of the difference in money between the amount of the contract with another party to perform the work, together with the cost to the District of redrafting, redrawing and publishing documents and papers necessary to obtain new bids on said work. The bid bond or check shall, in addition, be held subject to all other actual damages suffered by the District. But if the contract is entered into and said bonds and insurance are furnished, or if the proposal is not accepted, then the said check shall be returned to the undersigned.

PROPOSAL

For the Construction of **Lakeland Village MDP Line H**, located in Riverside County, consisting of the following estimated quantities:

SECT. NO.	ITEM NO.	ITEM OF WORK	UNIT	QUANTITY	UNIT COST	TOTAL COST
10	1.	Mobilization	L.S.	---	---	$30,000.00
11	2.	Water Control	L.S.	---	---	$5,000.00
12	3.	Traffic Control	L.S.	---	---	$50,000.00
13	4.	Clearing and Miscellaneous Work	L.S.	---	---	$50,000.00
14	5.	Excavation	C.Y.	38,580	$29.00	$1,118,820.00
14	6.	Precompaction	S.Y.	1,300	$4.45	$5,785.00
14	7.	Basin, Inlet and Outlet Excavation	C.Y.	27,190	$26.00	$706,940.00
14	8.	Rock Excavation	C.Y.	1,000	$182.00	$182,000.00
14	9.	Street Pavement Excavation	C.Y.	131	$140.00	$18,340.00
14	10.	Maiden Lane Roadway Excavation	C.Y.	212	$28.00	$5,936.00
14	11.	Backfill	C.Y.	18,870	$28.00	$528,360.00
14	12.	Embankment	C.Y.	1,284	$18.00	$23,112.00
14	13.	Controlled Low Strength Material (CLSM)	C.Y.	6,035	$186.00	$1,122,510.00
14	14.	Filter Material	C.Y.	945	$38.00	$35,910.00
15	15.	Trench Safety System and Falsework/Solid Sheeting Trench Safety and Falsework	L.S.	---	--- $450,000.00	$450,000.00
16	16.	Class "A" Concrete, Reinforced Concrete Box	C.Y.	354	$1,240.00	$438,960.00
16	17.	Class "A" Concrete, Bifurcation Structure	C.Y.	52	$1,150.00	$59,800.00
16	18.	Class "A" Concrete, Energy Dissipator – Impact Basin	C.Y.	223	$1,300.00	$289,900.00
16	19.	Class "A" Concrete, Sediment Basin Outlet Structure	C.Y.	20	$4,000.00	$80,000.00

PROPOSAL contd.

SECT. NO.	ITEM NO.	ITEM OF WORK	UNIT	QUANTITY	UNIT COST	TOTAL COST
16	20.	Class "A" Concrete, Walls	C.Y.	340	$1,250.00	$425,000.00
16	21.	Class "A" Concrete, Minor Structures	C.Y.	471	$1,350.00	$635,850.00
16	22.	Class "A" Concrete, Slope Paving and Footing	C.Y.	107	$1,000.00	$107,000.00
16	23.	Class "B" Concrete, 4' Cutoff Wall	C.Y.	75	$1,600.00	$120,000.00
16	24.	Class "B" Concrete, 6' Cutoff Wall	C.Y.	95	$1,330.00	$126,350.00
16	25.	Class "B" Concrete, Miscellaneous	C.Y.	122	$1,100.00	$134,200.00
16	26.	Class "B" Concrete, Concreted Rock	C.Y.	60	$240.00	$14,400.00
16	27.	Transition Structure No. 1	EACH	8	$35,000.00	$280,000.00
16	28.	Transition Structure No. 3	EACH	6	$12,350.00	$74,100.00
16	29.	Junction Structure No. 2	EACH	5	$3,800.00	$19,000.00
16	30.	Junction Structure No. 8	EACH	1	$16,000.00	$16,000.00
16	31.	Manhole No. 1	EACH	1	$7,700.00	$7,700.00
16	32.	Manhole No. 2	EACH	7	$16,400.00	$114,800.00
16	33.	Manhole No. 3	EACH	1	$3,200.00	$3,200.00
16	34.	Manhole No. 4	EACH	3	$24,500.00	$73,500.00
16	35.	Manhole No. 2 with Safety Ledge	EACH	1	$27,400.00	$27,400.00
16	36.	Manhole No. 3 with Safety Ledge	EACH	1	$10,600.00	$10,600.00
17	37.	18" RCP	L.F.	856	$113.00	$96,728.00
17	38.	24" RCP	L.F.	294	$135.00	$39,690.00
17	39.	30" RCP	L.F.	14	$148.00	$2,072.00
17	40.	42" RCP	L.F.	548	$181.00	$99,188.00
17	41.	48" RCP	L.F.	161	$224.00	$36,064.00
17	42.	66" RCP	L.F.	839	$319.00	$267,641.00

PROPOSAL contd.

SECT. NO.	ITEM NO.	ITEM OF WORK	UNIT	QUANTITY	UNIT COST	TOTAL COST
17	43.	72" RCP	L.F.	1,571	$422.00	$662,962.00
17	44.	78" RCP	L.F.	233	$488.00	$113,704.00
17	45.	90" RCP	L.F.	1,419	$744.00	$1,055,736.00
17	46.	96" RCP	L.F.	157	$670.00	$105,190.00
17	47.	102" RCP	L.F.	100	$1,128.00	$112,800.00
17	48.	Velocity Control Ring (D = 72", H = 6")	EACH	11	$12,725.00	$139,975.00
17	49.	Velocity Control Ring (D = 72", H = 4.5")	EACH	6	$12,725.00	$76,350.00
19	50.	Asphalt Concrete Grinding	S.F.	77,260	$0.72	$55,627.20
19	51.	Aggregate Base, Class 2	C.Y.	910	$148.00	$134,680.00
19	52.	Maiden Lane Aggregate Base, Class 2	C.Y.	318	$120.00	$38,160.00
19	53.	Hot Mix Asphalt (HMA)	TONS	1,550	$216.00	$334,800.00
19	54.	Maiden Lane Hot Mix Asphalt (HMA)	TONS	309	$107.00	$33,063.00
19	55.	6" AC Dike per Riverside County Standard No. 212	L.F.	570	$8.50	$4,845.00
19	56.	8" AC Dike per Riverside County Standard No. 212	L.F.	121	$8.50	$1,028.50
19	57.	Type D HMA Dike per Caltrans Standard No. A87B	L.F.	25	$8.50	$212.50
19	58.	Type E HMA Dike per Caltrans Standard No. A87B	L.F.	833	$8.50	$7,080.50
19	59.	Temporary Resurfacing	TONS	400	$150.00	$60,000.00
20	60.	6-Foot Chain Link Fence	L.F.	1,670	$68.00	$113,560.00
20	61.	Temporary Fencing	L.F.	500	$32.00	$16,000.00
20	62.	Cable Railing	L.F.	703	$70.00	$49,210.00

PROPOSAL contd.

SECT. NO.	ITEM NO.	ITEM OF WORK	UNIT	QUANTITY	UNIT COST	TOTAL COST
20	63.	12-Foot Double Drive Gates	PAIR	3	$3,000.00	$9,000.00
20	64.	14-Foot Double Drive Gates	PAIR	6	$3,200.00	$19,200.00
20	65.	16-Foot Double Drive Gates	PAIR	2	$3,500.00	$7,000.00
21	66.	Miscellaneous Iron and Steel	LBS.	27,520	$8.50	$233,920.00
21	67.	Delineators	EACH	3	$450.00	$1,350.00
21	68.	Remodel 4-Inch Vitrified Clay Pipe (VCP) Sewer House Connection	L.F.	100	$365.00	$36,500.00
21	69.	Relocate Waterline House Service Connection	L.F.	100	$650.00	$65,000.00
21	70.	Adjust Sewer Manhole to Grade	EACH	5	$2,000.00	$10,000.00
21	71.	Adjust Water Valve to Grade	EACH	30	$1,000.00	$30,000.00
21	72.	Barricade	L.F.	81	$200.00	$16,200.00
21	73.	Extra Directed Work	L.S.	---	---	300,000.00
26	74.	Rock Slope Protection, Class VII (1/2-Ton) Rock	C.Y.	136	$147.00	$19,992.00
26	75.	Rock Slope Protection, Class V (1/4-Ton) Rock	C.Y.	1,355	$132.00	$178,860.00
26	76.	Rock Slope Protection, Class III (150 lbs.) Rock	C.Y.	325	$135.00	$43,875.00
26	77.	Access Road Crushed Rock	C.Y.	150	$133.00	$19,950.00
26	78.	Rock Slope Protection (ESP) Filter Fabric	S.Y.	1,700	$5.00	$8,500.00
26	79.	Low Flow Trench Gravel	C.Y.	54	$37.00	$1,998.00
26	80.	Low Flow Trench Filter Fabric	S.Y.	180	$8.00	$1,440.00
27	81.	Dust Abatement	L.S.	---	---	$50,000.00
28	82.	Hydroseeding	ACRE	1.25	$5,000.00	$6,250.00

PROPOSAL contd.

SECT. NO.	ITEM NO.	ITEM OF WORK	UNIT	QUANTITY	UNIT COST	TOTAL COST
29	83.	Stormwater and Non-Stormwater Pollution Control	L.S.	---	---	$50,000.00
29	84.	Non-Stormwater Discharge or Dewatering	L.S.	---	---	$5,000.00
30	85.	Maiden Lane Waterline Relocation	L.S.	---	---	$200,000.00
30	86.	EVMWD Waterline Relocations	L.S.	---	---	$63,000.00
31	87.	6'W x 7'H Precast Reinforced Concrete Box (PRCB)	L.F.	321	$1,096.00	$351,816.00
31	88.	5'W x 8'H Precast Reinforced Concrete Box (PRCB)	L.F.	312	$1,120.00	$349,440.00

TOTAL COST
(State in Figures) $ 13,145,130.70

For the Total Bid Proposal of:

KEC Engineering
Name of Contractor

Signature of Contractor's authorized representative

Name: James Elfring

Title: President

200 N. Sherman Ave.
Address

330641527
S.S.N. or E.I.N.

Corona, CA 92882
City, State, Zip

701834 A, C27, C34
Contractor's License No. and Classification

(951) 734-3010 (951) 735-2041
Telephone Number Fax Number

1000390043
Contractor's DIR Registration No.

khai@kecengineering.com
Email

If bidder is a corporation, corporate seal and attestation shall be provided below.

Dated: 10/18/2021

ADDENDUM NO. 1 ACKNOWLEDGED:

Signature

LIST OF SUBCONTRACTORS

Contractor KEC Engineering

Lakeland Village MDP Line H
Project No. 3-0-00020

Give the name and the location of the place of business of each Subcontractor who will perform work or labor or render service to the General Contractor in or about the construction of the work or improvement, or a Subcontractor who specially fabricates and installs a portion of the work or improvement, in an amount in excess of one-half (½) of one percent (1%) of the General Contractor's total bid. List the bid item numbers of the work each subcontractor will do. If a portion of an item is to be subcontracted, show what percentage of that item is to be subcontracted.

Item No. (s) Asphalt / AC Dike 50,53,54 - 56%

Name of Subcontractor All American Asphalt

Address/City/Phone Corona CA 92878 951 736 7600

License No. 267073 Subcontractor's DIR Registration No. 1000001051

Item No. (s) Fence 60-65

Name of Subcontractor ACE FENCE

Address/City/Phone LA PUENTE, CA 91744 (626) 333-0727

License No. 996577 Subcontractor's DIR Registration No. 1000004092

Item No. (s) Rebar 16-24, 27-29

Name of Subcontractor INTEGRITY REBAR

Address/City/Phone PERRIS, CA 92571 (951) 696-6843

License No. 533729 Subcontractor's DIR Registration No. 1000005302

Item No. (s) Rock Excavation 8

Name of Subcontractor EDICK > WATT

Address/City/Phone Encinitas CA 92023 619 442 8883

License No. 622534 Subcontractor's DIR Registration No. 1000007222

Item No. (s)

Name of Subcontractor

Address/City/Phone

License No. Subcontractor's DIR Registration No.

LIST OF SUBCONTRACTORS

Contractor KEC Engineering

Lakeland Village MDP Line H
Project No. 3-0-00020

Give the name and the location of the place of business of each Subcontractor who will perform work or labor or render service to the General Contractor in or about the construction of the work or improvement, or a Subcontractor who specially fabricates and installs a portion of the work or improvement, in an amount in excess of one-half (½) of one percent (1%) of the General Contractor's total bid. List the bid item numbers of the work each subcontractor will do. If a portion of an item is to be subcontracted, show what percentage of that item is to be subcontracted.

Item No. (s)__________
Name of Subcontractor__________
Address/City/Phone__________
License No.__________ Subcontractor's DIR Registration No.__________

Item No. (s)__________
Name of Subcontractor__________
Address/City/Phone__________
License No.__________ Subcontractor's DIR Registration No.__________

Item No. (s)__________
Name of Subcontractor__________
Address/City/Phone__________
License No.__________ Subcontractor's DIR Registration No.__________

Item No. (s)__________
Name of Subcontractor__________
Address/City/Phone__________
License No.__________ Subcontractor's DIR Registration No.__________

Item No. (s)__________
Name of Subcontractor__________
Address/City/Phone__________
License No.__________ Subcontractor's DIR Registration No.__________

EXPERIENCE STATEMENT

Bidder submits, as part of his bid, the following statements as to his experience qualifications. Bidder certifies that all statements and information set forth below are true and accurate. Bidder hereby authorizes the District to make inquiry as appropriate regarding his experience.

Bidder has been engaged in the contracting business under this present business name for 26 years.

Bidder's experience in work of a nature similar in type and magnitude to that set forth in the Specification extends over a period of 26 years.

Within the last three years, Bidder has satisfactorily completed the following contracts covering work similar in type and magnitude to that set forth in these Specifications for the following owners (name person, firms, or authorities):

Name and Address of Owner/Agency	Representative and Telephone	Type of Work, Year Completed and Dollar Amount
LCDPW 900 S. Fremont Ave. Alhambra, CA 91802	Anoush Hovsepians (626) 458-3139	Channel Repair inside existing Rectangular Channel, RCB, RC Channel Wall, Demo Completed: 6/2021 $845,121.00
SBCFCD 825 E. 3rd St. San Bernardino, CA 92415	Larry White (909) 387-7924	SD, RCB, RCP, Bridging, Shoring, Paving, DW, SW, C&G Completed: 5/2021 $5,532,269.85
OCPW 300 Centennial Way Tustin, CA 92780	Ken Nishikawa (714) 573-3389	Channel Slope, Earthen Bottom, Shoring, RCP, Dewatering, Landscaping, Dry Utilities, DG, Asphalt, Structures, RCB, Rip Rap, Demo, CLF, Signing & Striping Completed: 12/2020 $12,800,000.00
Ventura County 800 S. Victoria Ave. Ventura, CA 93009-1600	Masood Jilani (805) 654-2029	RCP, RC Channel Wall, Sewer, Sewer Bypass, Rip Rap Concrete Structures, CMU, Keystone Completed: 5/2020 $5,900,000
SC Ontario Development Company, LLC 1156 N. Mountain Ave Upland, CA 91786	Kavous Emami (714) 401-4695	SS, SD, Sewer Bypass, Concrete Structures Completed: 1/2021 $933,236.63

STATEMENT OF LICENSURE

Pursuant to California Public Contract Code §3300, the undersigned does certify as follows:

1. That the pocket license/certificate of licensure I have presented to owner as of this date is my own license, being State of California, Contractors License No. 701834 ; and

2. That said Contractors License is current and valid; and

3. That said Contractors License is of a classification appropriate to the work to be undertaken for owner, a Class A license.

I declare under penalty of perjury under the laws of the State of California that the foregoing is true and correct.

DATED: 10/18/2021

Signature James Elfring

President
Title

A notary public or other officer completing this certificate verifies only the identity of the individual who signed the document to which this certificate is attached, and not the truthfulness, accuracy, or validity of that document.

STATE OF CALIFORNIA) §
COUNTY OF RIVERSIDE)

On this the 18 day of OCTOBER, 20 21 , before me

NATHAN A. ELFRING, NOTARY PUBLIC

the undersigned Notary Public, personally appeared

JAMES ELFRING

who proved to me on the basis of satisfactory evidence to be the person(~~s~~) whose name(~~s~~) is/~~are~~ subscribed to the within instrument, and acknowledged that he/~~she~~ executed the same in his/~~her/their~~ authorized capacity(~~ies~~), and that by his/~~her/their~~ signature(~~s~~) on the instrument the person(~~s~~), or the entity upon behalf of which the person(~~s~~) acted, executed the instrument.

I certify under PENALTY OF PERJURY under the laws of the State of California that the foregoing paragraph is true and correct.

WITNESS my hand and official seal.

Notary's Signature (Seal)

NATHAN A. ELFRING
Notary Public – California
Riverside County
Commission # 2231453
My Comm. Expires Feb 16, 2022

NON-COLLUSION DECLARATION
(Public Contract Code Section 7106)

The undersigned declares:

I am the President of KEC Engineering, the party making the foregoing bid.

The bid is not made in the interest of, or on behalf of, any undisclosed person, partnership, company, association, organization, or corporation. The bid is genuine and not collusive or sham. The bidder has not directly or indirectly induced or solicited any other bidder to put in a false or sham bid. The bidder has not directly or indirectly colluded, conspired, connived, or agreed with any bidder or anyone else to put in a sham bid, or to refrain from bidding. The bidder has not in any manner, directly or indirectly, sought by agreement, communication, or conference with anyone to fix the bid price of the bidder or any other bidder, or to fix any overhead, profit, or cost element of the bid price, or of that of any other bidder. All statements contained in the bid are true. The bidder has not, directly or indirectly, submitted his or her bid price or any breakdown thereof, or the contents thereof, or divulged information or data relative thereto, to any corporation, partnership, company, association, organization, bid depository, or to any member or agent thereof, to effectuate a collusive or sham bid, and has not paid, and will not pay, any person or entity for such purpose.

Any person executing this declaration on behalf of a bidder that is a corporation, partnership, joint venture, limited liability company, limited liability partnership, or any other entity, hereby represents that he or she has full power to execute, and does execute, this declaration on behalf of the bidder.

I declare under penalty of perjury under the laws of the State of California that the foregoing is true and correct and that this declaration is executed on 10/18/2021 [date], at Corona [city], CA [state].

[Signature of Declarant]

James Elfring
[Printed Name of Person Signing]

KEC Engineering
[Name of Bidder]

President
[Office or Title]

ACKNOWLEDGMENT

A notary public or other officer completing this certificate verifies only the identity of the individual who signed the document to which this certificate is attached, and not the truthfulness, accuracy, or validity of that document.

State of California
County of Riverside)

On October 18, 2021 before me, Nathan A. Elfring, Notary Public
(insert name and title of the officer)

personally appeared James Elfring,
who proved to me on the basis of satisfactory evidence to be the person(~~s~~) whose name(~~s~~) is/~~are~~ subscribed to the within instrument and acknowledged to me that he/~~she/they~~ executed the same in his/~~her/their~~ authorized capacity(~~ies~~), and that by his/~~her/their~~ signature(~~s~~) on the instrument the person(~~s~~), or the entity upon behalf of which the person(~~s~~) acted, executed the instrument.

I certify under PENALTY OF PERJURY under the laws of the State of California that the foregoing paragraph is true and correct.

WITNESS my hand and official seal.

NATHAN A. ELFRING
Notary Public – California
Riverside County
Commission # 2231453
My Comm. Expires Feb 16, 2022

Signature _____ **(Seal)**

IRAN CONTRACTING ACT CERTIFICATION

In accordance with Public Contract Code Section 2204(a), prior to bidding on, submitting a proposal or executing a contract or renewal for a District contract for goods or services of $1,000,000 or more, a Contractor must either:

c) Certify it is not on the current list of persons engaged in investment activities in Iran created by the California Department of General Services ("DGS") pursuant to Public Contract Code Section 2203(b) and is not a financial institution extending twenty million dollars ($20,000,000) or more in credit to another person, for 45 days or more, if that other person will use the credit to provide goods or services in the energy sector in Iran and is identified on the current list of persons engaged in investment activities in Iran created by DGS; or

d) Demonstrate it has been exempted from the certification requirement for that solicitation or contract pursuant to Public Contract Code Section 2203(c) or (d).

To comply with this requirement, please insert your Contractor or financial institution name and Federal ID Number (if available) and complete one of the options below. Please note: California law establishes penalties for providing false certifications, including civil penalties equal to the greater of $250,000 or twice the amount of the contract for which the false certification was made; contract termination; and three-year ineligibility to bid on contracts. (Public Contract Code Section 2205.)

Option #1 – Certification

I, the official named below, certify I am duly authorized to execute this certification on behalf of the Contractor/financial institution identified below, and the Contractor/financial institution identified below is **not** on the current list of persons engaged in investment activities in Iran created by DGS and is not a financial institution extending twenty million dollars ($20,000,000) or more in credit to another person/vendor, for 45 days or more, if that other person/vendor will use the credit to provide goods or services in the energy sector in Iran and is identified on the current list of persons engaged in investment activities in Iran created by DGS.

Contractor Name/Financial Institution (Printed) KEC Engineering	*Federal ID Number (or n/a)* 330641527
By (Authorized Signature)	
Printed Name and Title of Person Signing James Elfring, President	
Date Executed 10/18/2021	*Executed in* Corona, CA

Option #2 – Exemption

Pursuant to Public Contract Code Sections 2203(c) and (d), a public entity may permit a Contractor/financial institution engaged in investment activities in Iran, on a case-by-case basis, to be eligible for, or to bid on, submit a proposal for, or enters into or renews, a contract for goods and services.

If you have obtained an exemption from the certification requirement under the Iran Contracting Act, please fill out the information below, and attach documentation demonstrating the exemption approval.

Contractor Name/Financial Institution (Printed)	*Federal ID Number (or n/a)*
By (Authorized Signature)	
Printed Name and Title of Person Signing	
Date Executed	*Executed in*

BID BOND

Recitals

1. The undersigned KEC Engineering (Contractor), is herewith submitting to the Riverside County Flood Control and Water Conservation District (District), a Bid Proposal ("Proposal") dated October 20, 20 21, for the construction of public work for **Lakeland Village MDP Line H** in accordance with a Notice to Contractors dated September 14, 2021.

2. Contractor is obligated as a condition of said Bid to submit security in the amount of at least ten percent (10%) of the Bid Amount, which security may be in the form of a Bid Bond issued by an admitted surety insurer pursuant to Code of Civil Procedure Section 995.120 ("Admitted Surety").

3. Liberty Mutual Insurance Company a Massachusetts corporation, hereafter called (Surety), is the surety on this Bid Bond.

Agreement

We, Contractor as principal and Surety as surety, jointly and severally agree and state as follows:

1. The amount of the obligation of this Bond is ten percent (10%) of the amount of the Contractor's Proposal and inures to the benefit of District.

2. This Bond is exonerated by (1) District rejecting said Proposal or, in the alternate, (2) if said Proposal is accepted, Contractor executes the Construction Agreement and furnishes the Performance Bond, Payment Bond and Insurance as agreed to in its Proposal, otherwise it remains in full force and effect for the recovery of loss, damage and expense of District resulting from failure of Contractor to act as agreed to in its Proposal. Some types of possible loss, damage and expense are specified in the Contractor's Proposal.

3. Surety for value received, stipulates and agrees that its obligations hereunder that no change, any extension of time within which District may accept the Proposal, alteration or addition to the terms of the Contract or the Bidding Documents, or to the work to be performed thereunder, nor any withdrawal of the Proposal in a manner not permitted by the requirements of the Bidding requirements shall in any way impair or affect Surety's obligation under this Bond, and Surety does hereby waive notice of any such changes, extension of time, alterations or additions.

4. This Bond is binding on our heirs, executors, administrators, successors and assigns.

5. In the event any legal proceeding or arbitration is brought upon this Bond by District and judgment or award is entered in favor of District as the prevailing party, Surety shall pay all costs and attorney's fees incurred by the District.

IN WITNESS WHEREOF the undersigned parties have executed this instrument under their several seals this day of October 7, 20 21, the name and corporate seal of each corporate party being hereto affixed and these presents duly signed by its undersigned representative, pursuant to authority of its governing body.

Dated: October 7, 2021

KEC Engineering
(Proper name of Contractor)

(Corporate Seal of Contractor, if Corporation)

By: _____
Signature of Contractor's authorized representative

JAMES ELFRINK, PRESIDENT
Print or type authorized representative's Name and Title

200 N. Sherman Avenue
Print or type Contractor's Address

Corona, CA 92882

(Corporate Seal of Surety)

Surety Liberty Mutual Insurance Company

By: _____
Attorney-in-Fact Candy A. Dakin

(Attach Attorney-in-Fact Certificate and Required Acknowledgments)

Seal No. 5747

GMGS Risk Management & Insurance Services
Name and Address of California Agent of Surety

6201 Oak Canyon, Suite 100

Irvine, CA 92618

(949) 559-6700
Telephone Number of California Agent of Surety

NOTE: Notary acknowledgment of signatures of Contractor and Surety, and Surety's Power of Attorney, must be included or attached.

ACKNOWLEDGMENT

A notary public or other officer completing this certificate verifies only the identity of the individual who signed the document to which this certificate is attached, and not the truthfulness, accuracy, or validity of that document.

State of California
County of Riverside)

On October 18, 2021 before me, Nathan A. Elfring, Notary Public
(insert name and title of the officer)

personally appeared James Elfring,
who proved to me on the basis of satisfactory evidence to be the person(~~s~~) whose name(~~s~~) ~~is~~/~~are~~ subscribed to the within instrument and acknowledged to me that he/~~she/they~~ executed the same in his/~~her/their~~ authorized capacity(~~ies~~), and that by his/~~her/their~~ signature(~~s~~) on the instrument the person(~~s~~), or the entity upon behalf of which the person(~~s~~) acted, executed the instrument.

I certify under PENALTY OF PERJURY under the laws of the State of California that the foregoing paragraph is true and correct.

WITNESS my hand and official seal.

NATHAN A. ELFRING
Notary Public – California
Riverside County
Commission # 2231453
My Comm. Expires Feb 16, 2022

Signature _____ **(Seal)**

ACKNOWLEDGMENT

A notary public or other officer completing this certificate verifies only the identity of the individual who signed the document to which this certificate is attached, and not the truthfulness, accuracy, or validity of that document.

State of California
County of Orange)

On October 7, 2021 before me, Blanca Roque, Notary Public
(insert name and title of the officer)

personally appeared Candy A. Dakin,
who proved to me on the basis of satisfactory evidence to be the person(~~s~~) whose name(~~s~~) is/~~are~~ subscribed to the within instrument and acknowledged to me that ~~he~~/she/~~they~~ executed the same in ~~his~~/her/~~their~~ authorized capacity(~~ies~~), and that by ~~his~~/her/~~their~~ signature(~~s~~) on the instrument the person(~~s~~), or the entity upon behalf of which the person(~~s~~) acted, executed the instrument.

I certify under PENALTY OF PERJURY under the laws of the State of California that the foregoing paragraph is true and correct.

WITNESS my hand and official seal.

BLANCA ROQUE
Notary Public - California
Orange County
Commission # 2288386
My Comm. Expires Jun 9, 2023

Signature Blanca Roque (Seal)

This Power of Attorney limits the acts of those named herein, and they have no authority to bind the Company except in the manner and to the extent herein stated.

Liberty Mutual. SURETY

Liberty Mutual Insurance Company
The Ohio Casualty Insurance Company
West American Insurance Company

Certificate No: **8205866-024087**

POWER OF ATTORNEY

KNOWN ALL PERSONS BY THESE PRESENTS: That The Ohio Casualty Insurance Company is a corporation duly organized under the laws of the State of New Hampshire, that Liberty Mutual Insurance Company is a corporation duly organized under the laws of the State of Massachusetts, and West American Insurance Company is a corporation duly organized under the laws of the State of Indiana (herein collectively called the "Companies"), pursuant to and by authority herein set forth, does hereby name, constitute and appoint, Candy A Dakin; Cynthia S. Wozney; Denise Bennett; Edward W. Griffith II; Paul A. Bland; Steven C. Mosier

all of the city of Irvine state of CA each individually if there be more than one named, its true and lawful attorney-in-fact to make, execute, seal, acknowledge and deliver, for and on its behalf as surety and as its act and deed, any and all undertakings, bonds, recognizances and other surety obligations, in pursuance of these presents and shall be as binding upon the Companies as if they have been duly signed by the president and attested by the secretary of the Companies in their own proper persons.

IN WITNESS WHEREOF, this Power of Attorney has been subscribed by an authorized officer or official of the Companies and the corporate seals of the Companies have been affixed thereto this 29th day of June, 2021.

LIBERTY MUTUAL INSURANCE COMPANY INCORPORATED 1912 MASSACHUSETTS — THE OHIO CASUALTY INSURANCE COMPANY INCORPORATED 1919 NEW HAMPSHIRE — WEST AMERICAN INSURANCE COMPANY INCORPORATED 1991 INDIANA

Liberty Mutual Insurance Company
The Ohio Casualty Insurance Company
West American Insurance Company

By: David M. Carey, Assistant Secretary

State of PENNSYLVANIA
County of MONTGOMERY ss

On this 29th day of June, 2021 before me personally appeared David M. Carey, who acknowledged himself to be the Assistant Secretary of Liberty Mutual Insurance Company, The Ohio Casualty Company, and West American Insurance Company, and that he, as such, being authorized so to do, execute the foregoing instrument for the purposes therein contained by signing on behalf of the corporations by himself as a duly authorized officer.

IN WITNESS WHEREOF, I have hereunto subscribed my name and affixed my notarial seal at King of Prussia, Pennsylvania, on the day and year first above written.

TERESA PASTELLA COMMONWEALTH OF PENNSYLVANIA NOTARY PUBLIC

Commonwealth of Pennsylvania - Notary Seal
Teresa Pastella, Notary Public
Montgomery County
My commission expires March 28, 2025
Commission number 1126044
Member, Pennsylvania Association of Notaries

By: Teresa Pastella, Notary Public

This Power of Attorney is made and executed pursuant to and by authority of the following By-laws and Authorizations of The Ohio Casualty Insurance Company, Liberty Mutual Insurance Company, and West American Insurance Company which resolutions are now in full force and effect reading as follows:

ARTICLE IV – OFFICERS: Section 12. Power of Attorney.
Any officer or other official of the Corporation authorized for that purpose in writing by the Chairman or the President, and subject to such limitation as the Chairman or the President may prescribe, shall appoint such attorneys-in-fact, as may be necessary to act in behalf of the Corporation to make, execute, seal, acknowledge and deliver as surety any and all undertakings, bonds, recognizances and other surety obligations. Such attorneys-in-fact, subject to the limitations set forth in their respective powers of attorney, shall have full power to bind the Corporation by their signature and execution of any such instruments and to attach thereto the seal of the Corporation. When so executed, such instruments shall be as binding as if signed by the President and attested to by the Secretary. Any power or authority granted to any representative or attorney-in-fact under the provisions of this article may be revoked at any time by the Board, the Chairman, the President or by the officer or officers granting such power or authority.

ARTICLE XIII – Execution of Contracts: Section 5. Surety Bonds and Undertakings.
Any officer of the Company authorized for that purpose in writing by the chairman or the president, and subject to such limitations as the chairman or the president may prescribe, shall appoint such attorneys-in-fact, as may be necessary to act in behalf of the Company to make, execute, seal, acknowledge and deliver as surety any and all undertakings, bonds, recognizances and other surety obligations. Such attorneys-in-fact subject to the limitations set forth in their respective powers of attorney, shall have full power to bind the Company by their signature and execution of any such instruments and to attach thereto the seal of the Company. When so executed such instruments shall be as binding as if signed by the president and attested by the secretary.

Certificate of Designation – The President of the Company, acting pursuant to the Bylaws of the Company, authorizes David M. Carey, Assistant Secretary to appoint such attorneys-in-fact as may be necessary to act on behalf of the Company to make, execute, seal, acknowledge and deliver as surety any and all undertakings, bonds, recognizances and other surety obligations.

Authorization – By unanimous consent of the Company's Board of Directors, the Company consents that facsimile or mechanically reproduced signature of any assistant secretary of the Company, wherever appearing upon a certified copy of any power of attorney issued by the Company in connection with surety bonds, shall be valid and binding upon the Company with the same force and effect as though manually affixed.

I, Renee C. Llewellyn, the undersigned, Assistant Secretary, The Ohio Casualty Insurance Company, Liberty Mutual Insurance Company, and West American Insurance Company do hereby certify that the original power of attorney of which the foregoing is a full, true and correct copy of the Power of Attorney executed by said Companies, is in full force and effect and has not been revoked.

IN TESTIMONY WHEREOF, I have hereunto set my hand and affixed the seals of said Companies this 7TH day of OCTOBER, 2021.

LIBERTY MUTUAL INSURANCE COMPANY INCORPORATED 1912 MASSACHUSETTS — THE OHIO CASUALTY INSURANCE COMPANY INCORPORATED 1919 NEW HAMPSHIRE — WEST AMERICAN INSURANCE COMPANY INCORPORATED 1991 INDIANA

By: Renee C. Llewellyn, Assistant Secretary

Not valid for mortgage, note, loan, letter of credit, currency rate, interest rate or residual value guarantees.

For bond and/or Power of Attorney (POA) verification inquiries, please call 610-832-8240 or email HOSUR@libertymutual.com.

Liberty Mutual.
SURETY

Liberty Mutual Surety
1001 4th Ave Ste 3800
Office: 206-473-3533

As part of its business continuity efforts during the pendency of the COVID-19 pandemic, Liberty Mutual Insurance Company ("LMIC") on behalf of itself and the companies listed below has authorized its Attorneys-in-Fact to affix its corporate seal for surety obligations in a digital format in lieu of its traditional raised seal to any bond issued on its behalf by any such Attorney-in-Fact:

Liberty Mutual Insurance Company
Liberty Mutual Fire Insurance Company
The Ohio Casualty Insurance Company
West American Insurance Company
Safeco Insurance Company of America
American States Insurance Company

Please note that the digital seal utilized by our authorized agents will also include their agency specific reference number.

LMIC agrees and affirms on behalf of itself and the other companies listed herein, that the digital corporate seal referenced above has the same binding effect when affixed to a bond or a Power of Attorney document as if it were a raised corporate seal.

Effective this 23rd day of March, 2020.

By: _____
Renee C. Llewellyn, Assistant Secretary

BYRD ANTI-LOBBYING AMENDMENT CERTIFICATION

APPENDIX A, 44 C.F.R. PART 18 - CERTIFICATION REGARDING LOBBYING Certification for Contracts, Grants, Loans, and Cooperative Agreements

The undersigned certifies, to the best of his or her knowledge and belief, that:

1. No Federal appropriated funds have been paid or will be paid, by or on behalf of the undersigned, to any person for influencing or attempting to influence an officer or employee of an agency, a Member of Congress, an officer or employee of Congress, or an employee of a Member of Congress in connection with the awarding of any Federal contract, the making of any Federal grant, the making of any Federal loan, the entering into of any cooperative agreement, and the extension, continuation, renewal, amendment, or modification of any Federal contract, grant, loan, or cooperative agreement.

2. If any funds other than Federal appropriated funds have been paid or will be paid to any person for influencing or attempting to influence an officer or employee of any agency, a Member of Congress, an officer or employee of Congress, or an employee of a Member of Congress in connection with this Federal contract, grant, loan, or cooperative agreement, the undersigned shall complete and submit Standard Form-LLL, "Disclosure Form to Report Lobbying," in accordance with its instructions.

3. The undersigned shall require that the language of this certification be included in the award documents for all subawards at all tiers (including subcontracts, subgrants, and contracts under grants, loans, and cooperative agreements) and that all subrecipients shall certify and disclose accordingly.

This certification is a material representation of fact upon which reliance was placed when this transaction was made or entered into. Submission of this certification is a prerequisite for making or entering into this transaction imposed by section 1352, title 31, U.S. Code. Any person who fails to file the required certification shall be subject to a civil penalty of not less than $10,000 and not more than $100,000 for each such failure.

The Contractor, KEC Engineering, certifies or affirms the truthfulness and accuracy of each statement of its certification and disclosure, if any. In addition, the Contractor understands and agrees that the provisions of 31 U.S.C. Chap. 38, Administrative Remedies for False Claims and Statements, apply to this certification and disclosure, if any.

Signature of Contractor's Authorized Official

James Elfring, President
Name and Title of Contractor's Authorized Official

10/18/2021
Date

CONSTRUCTION AGREEMENT

THIS CONSTRUCTION AGREEMENT ("Agreement") is made as of January 11, 2022 and is by and between RIVERSIDE COUNTY FLOOD CONTROL AND WATER CONSERVATION DISTRICT, a body politic, (District) and KEC ENGINEERING (Contractor).

IT IS AGREED BY THE PARTIES AS FOLLOWS:

1. The Work. Contractor shall furnish all tools, equipment, apparatus, facilities, labor, supervision, services, transportation, materials and other required items and materials and do all things necessary to perform, accomplish and complete the work for **Project No. 3-0-00020, Lakeland Village MDP Line H** of District, in exact conformity with the Contract Documents (identified below) for the Project, subject to such inspection as District deems appropriate and pursuant to orders and instructions, drawings, etc., issued by District in accordance with the Contract Documents.

2. Contract Documents. The Contract Documents for **Project No. 3-0-00020, Lakeland Village MDP Line H** of District are:

(a) Notice Inviting Bids to Contractors;
(b) Instructions To Bidders;
(c) Contractor's Proposal, including List of Subcontractors, Statement of Licensure, Non-Collusion Declaration, Iran Contracting Act Certification;
(d) Bid Bond
(e) Byrd Anti-Lobbying Amendment Certification
(f) Construction Agreement, including Exhibit A, Workers' Compensation Contractor Certificate, Declaration of Sufficiency of Funds, and Evidence of Insurance;
(g) Performance Bond;
(h) Payment Bond;
(i) General Provisions;
(j) Special Federal Provisions;
(k) Special Provisions;
(l) Detailed Specifications;
(m) Plans;
(n) Appendices and any other documents included in or incorporated into the Contract Documents;
(o) Orders, Instructions, Drawings and Plans issued by District during the course of the work in accordance with the provisions of the Contract Documents; and
(p) Addendum No. 1.

Each of the above-mentioned documents presently in existence are by this reference incorporated herein and each of said documents not now in existence are incorporated herein as of the time of their issuance.

The Bid Bond is exonerated upon execution and delivery to District in a form satisfactory to District, of the following, duly executed by Contractor and also by its Surety as to the Bonds, Construction Agreement, Certificate of Insurance, Performance Bond, and Payment Bond.

3. Bonds - Insurance. Contractor must deliver to District and District must approve, a fully executed Performance Bond in the amount of 100% of the estimated contract price, a fully executed Payment Bond in the amount of 100% of the estimated contract price, and fully executed certificates of insurance evidencing the existence of the insurance required by Subsection 8.02 of the General Provisions. The Payment Bond and Performance Bond must be on forms furnished by District.

Should any surety on the Performance Bond or Payment Bond be deemed unsatisfactory by the Board of Supervisors of District, Contractor shall upon notice promptly substitute new Bonds in form satisfactory to District.

4. Contract Price - Payment. The District agrees to pay and the Contractor agrees to accept in full consideration for the performance of the Agreement, the sum of the total amount provided in Exhibit A, attached hereto, marked Exhibit A and by this reference made a part hereof, is provision for the Contract Price and its payment, subject to additions and deductions as provided in the Specifications and Contract Documents.

5. Contract Time for Completion. The Work shall be commenced on a date to be specified in a written "Notice To Proceed" to be issued by the District and shall be completed within the duration specified in the Specifications and Contract Documents. It is expressly agreed that except for extensions of time duly granted in the manner and for the reasons specified in the General Provisions, time shall be of the essence.

RIVERSIDE COUNTY FLOOD CONTROL
AND WATER CONSERVATION DISTRICT

By Karen S. Spiegel
Chair of its Board of Supervisors
KAREN SPIEGEL

ATTEST:

KECIA R. HARPER
Clerk of the Board

By
Deputy

(Seal)

FORM APPROVED COUNTY COUNSEL
BY KBV 12/16/2021
KRISTINE BELL-VALDEZ DATE

KEC Engineering
Contractor

By

Title James Elfring, President

(If corporation affix corporate seal)

EXHIBIT A

(To Agreement for Riverside County Flood Control and Water Conservation District's Project No. **3-0-00020, Lakeland Village MDP Line H**, located in Riverside County, California.)

Contract Price - Payment - District shall pay Contractor the following sums for the items set forth below in accordance with Contractor's Proposal as accepted by District, which sums shall be paid as provided in the General Provisions and subject to additions and deductions as provided in the Contract Documents.

It is understood that the quantities listed, except for those shown as "Final" or "Lump Sum" are but estimates only and final payment will be based on actual work performed, subject to such adjustments and alterations as elsewhere provided.

ITEM NO.	ITEM OF WORK	UNIT	QUANTITY	UNIT COST	TOTAL COST
1.	Mobilization	L.S.	- - -	- - -	$30,000.00
2.	Water Control	L.S.	- - -	- - -	5,000.00
3.	Traffic Control	L.S.	- - -	- - -	50,000.00
4.	Clearing and Miscellaneous Work	L.S.	- - -	- - -	50,000.00
5.	Excavation	C.Y.	38,580	$29.00	1,118,820.00
6.	Precompaction	S.Y.	1,300	$4.45	5,785.00
7.	Basin, Inlet and Outlet Excavation	C.Y.	27,190	$26.00	706,940.00
8.	Rock Excavation	C.Y.	1,000	$182.00	182,000.00
9.	Street Pavement Excavation	C.Y.	131	$140.00	18,340.00
10.	Maiden Lane Roadway Excavation	C.Y.	212	$28.00	5,936.00
11.	Backfill	C.Y.	18,870	$28.00	528,360.00
12.	Embankment	C.Y.	1,284	$18.00	23,112.00
13.	Controlled Low Strength Material (CLSM)	C.Y.	6,035	$186.00	1,122,510.00
14.	Filter Material	C.Y.	945	$38.00	35,910.00
15.	Trench Safety System and Falsework/Solid Sheeting Trench Safety and Falsework	L.S.	- - -	- - -	450,000.00
16.	Class "A" Concrete, Reinforced Concrete Box	C.Y.	354	$1,240.00	438,960.00

EXHIBIT A contd.

ITEM NO.	ITEM OF WORK	UNIT	QUANTITY	UNIT COST	TOTAL COST
17.	Class "A" Concrete, Bifurcation Structure	C.Y.	52	$1,150.00	59,800.00
18.	Class "A" Concrete, Energy Dissipator – Impact Basin	C.Y.	223	$1,300.00	289,900.00
19.	Class "A" Concrete, Sediment Basin Outlet Structure	C.Y.	20	$4,000.00	80,000.00
20.	Class "A" Concrete, Walls	C.Y.	340	$1,250.00	425,000.00
21.	Class "A" Concrete, Minor Structures	C.Y.	471	$1,350.00	635,850.00
22.	Class "A" Concrete, Slope Paving and Footing	C.Y.	107	$1,000.00	107,000.00
23.	Class "B" Concrete, 4' Cutoff Wall	C.Y.	75	$1,600.00	120,000.00
24.	Class "B" Concrete, 6' Cutoff Wall	C.Y.	95	$1,330.00	126,350.00
25.	Class "B" Concrete, Miscellaneous	C.Y.	122	$1,100.00	134,200.00
26.	Class "B" Concrete, Concreted Rock	C.Y.	60	$240.00	14,400.00
27.	Transition Structure No. 1	EACH	8	$35,000.00	280,000.00
28.	Transition Structure No. 3	EACH	6	$12,350.00	74,100.00
29.	Junction Structure No. 2	EACH	5	$3,800.00	19,000.00
30.	Junction Structure No. 8	EACH	1	$16,000.00	16,000.00
31.	Manhole No. 1	EACH	1	$7,700.00	7,700.00
32.	Manhole No. 2	EACH	7	$16,400.00	114,800.00
33.	Manhole No. 3	EACH	1	$3,200.00	3,200.00
34.	Manhole No. 4	EACH	3	$24,500.00	73,500.00
35.	Manhole No. 2 with Safety Ledge	EACH	1	$27,400.00	27,400.00
36.	Manhole No. 3 with Safety Ledge	EACH	1	$10,600.00	10,600.00
37.	18" RCP	L.F.	856	$113.00	96,728.00

EXHIBIT A contd.

ITEM NO.	ITEM OF WORK	UNIT	QUANTITY	UNIT COST	TOTAL COST
38.	24" RCP	L.F.	294	$135.00	39,690.00
39.	30" RCP	L.F.	14	$148.00	2,072.00
40.	42" RCP	L.F.	548	$181.00	99,188.00
41.	48" RCP	L.F.	161	$224.00	36,064.00
42.	66" RCP	L.F.	839	$319.00	267,641.00
43.	72" RCP	L.F.	1,571	$422.00	662,962.00
44.	78" RCP	L.F.	233	$488.00	113,704.00
45.	90" RCP	L.F.	1,419	$744.00	1,055,736.00
46.	96" RCP	L.F.	157	$670.00	105,190.00
47.	102" RCP	L.F.	100	$1,128.00	112,800.00
48.	Velocity Control Ring (D = 72", H = 6")	EACH	11	$12,725.00	139,975.00
49.	Velocity Control Ring (D = 72", H = 4.5")	EACH	6	$12,725.00	76,350.00
50.	Asphalt Concrete Grinding	S.F.	77,260	$0.72	55,627.20
51.	Aggregate Base, Class 2	C.Y.	910	$148.00	134,680.00
52.	Maiden Lane Aggregate Base, Class 2	C.Y.	318	$120.00	38,160.00
53.	Hot Mix Asphalt (HMA)	TONS	1,550	$216.00	334,800.00
54.	Maiden Lane Hot Mix Asphalt (HMA)	TONS	309	$107.00	33,063.00
55.	6" AC Dike per Riverside County Standard No. 212	L.F.	570	$8.50	4,845.00
56.	8" AC Dike per Riverside County Standard No. 212	L.F.	121	$8.50	1,028.50
57.	Type D HMA Dike per Caltrans Standard No. A87B	L.F.	25	$8.50	212.50

EXHIBIT A contd.

ITEM NO.	ITEM OF WORK	UNIT	QUANTITY	UNIT COST	TOTAL COST
58.	Type E HMA Dike per Caltrans Standard No. A87B	L.F.	833	$8.50	7,080.50
59.	Temporary Resurfacing	TONS	400	$150.00	60,000.00
60.	6-Foot Chain Link Fence	L.F.	1,670	$68.00	113,560.00
61.	Temporary Fencing	L.F.	500	$32.00	16,000.00
62.	Cable Railing	L.F.	703	$70.00	49,210.00
63.	12-Foot Double Drive Gates	PAIR	3	$3,000.00	9,000.00
64.	14-Foot Double Drive Gates	PAIR	6	$3,200.00	19,200.00
65.	16-Foot Double Drive Gates	PAIR	2	$3,500.00	7,000.00
66.	Miscellaneous Iron and Steel	LBS.	27,520	$8.50	233,920.00
67.	Delineators	EACH	3	$450.00	1,350.00
68.	Remodel 4-Inch Vitrified Clay Pipe (VCP) Sewer House Connection	L.F.	100	$365.00	36,500.00
69.	Relocate Waterline House Service Connection	L.F.	100	$650.00	65,000.00
70.	Adjust Sewer Manhole to Grade	EACH	5	$2,000.00	10,000.00
71.	Adjust Water Valve to Grade	EACH	30	$1,000.00	30,000.00
72.	Barricade	L.F.	81	$200.00	16,200.00
73.	Extra Directed Work	L.S.	- - -	- - -	300,000.00
74.	Rock Slope Protection, Class VII (1/2-Ton) Rock	C.Y.	136	$147.00	19,992.00
75.	Rock Slope Protection, Class V (1/4-Ton) Rock	C.Y.	1,355	$132.00	178,860.00
76.	Rock Slope Protection, Class III (150 lbs.) Rock	C.Y.	325	$135.00	43,875.00
77.	Access Road Crushed Rock	C.Y.	150	$133.00	19,950.00

EXHIBIT A contd.

ITEM NO.	ITEM OF WORK	UNIT	QUANTITY	UNIT COST	TOTAL COST
78.	Rock Slope Protection (ESP) Filter Fabric	S.Y.	1,700	$5.00	8,500.00
79.	Low Flow Trench Gravel	C.Y.	54	$37.00	1,998.00
80.	Low Flow Trench Filter Fabric	S.Y.	180	$8.00	1,440.00
81.	Dust Abatement	L.S.	- - -	- - -	50,000.00
82.	Hydroseeding	ACRE	1.25	$5,000.00	6,250.00
83.	Stormwater and Non-Stormwater Pollution Control	L.S.	- - -	- - -	50,000.00
84.	Non-Stormwater Discharge or Dewatering	L.S.	- - -	- - -	5,000.00
85.	Maiden Lane Waterline Relocation	L.S.	- - -	- - -	200,000.00
86.	EVMWD Waterline Relocations	L.S.	- - -	- - -	83,000.00
87.	6'W x 7'H Precast Reinforced Concrete Box (PRCB)	L.F.	321	$1,096.00	351,816.00
88.	5'W x 8'H Precast Reinforced Concrete Box (PRCB)	L.F.	312	$1,120.00	349,440.00
				TOTAL	$13,145,130.70

Issued in Quadruplicate

Bond Number: 024255478
Premium: $82,919.00
Premium is subject to adjustment based on final contract price

PERFORMANCE BOND

(Public Work – Public Contract Code Section 21091)

WHEREAS, the Riverside County Flood Control and Water Conservation District ("District") on January 11, 2022, has awarded Construction Contract Number: **3-0-00020** ("Contract") to the undersigned KEC Engineering, as Principal ("Principal") to perform the work ("Work") for the following project; **Lakeland Village MDP Line H**, which Contract is by this reference hereby incorporated herein and made a part hereof;

WHEREAS, said Principal is required by the Contract and/or by California Public Contract Code, Section 21091 to furnish a performance bond for the faithful performance of the Contract;

NOW THEREFORE, we, the Principal and Liberty Mutual Insurance Company ("Surety"), an admitted surety insurer pursuant to Code of Civil Procedure, Section 995.120, are held and firmly bound unto District in the penal sum of Thirteen Million One Hundred Forty-Five Thousand One Hundred Thirty and 70/100--- Dollars ($13,145,130.70---), this amount being not less than one hundred percent (100%) of the total sum payable by District under the Contract at the time the Contract is awarded by District to the Principal, lawful money of the United States of America, for the payment of which sum well and truly to be made, we, Principal and Surety, bind ourselves, our heirs, executors, administrators, successors and assigns, jointly and severally, firmly by these presents, to:

1. Perform all the work required to complete the Project; and

2. Pay to the District all damages the District incurs as a result of the Contractor's failure to perform all the Work required to complete the Project.

THE CONDITION OF THIS OBLIGATION IS SUCH that if Principal, its heirs, executors, administrators, successors or assigns approved by District, shall in all things stand to and abide by and well and truly keep and perform all the undertakings, terms, covenants, conditions and agreements in the Contract, including, without limitation, all obligations during the original term and any extensions thereof as may be granted by District, with or without notice to Surety thereof (including, without limitation, the obligation for Principal to pay liquidated damages), all obligations during the period of any warranties and guarantees required under the Contract and all other obligations otherwise arising under the terms of the Contract (such as, but not limited to, obligations of indemnification), all within the time and in the manner therein designated in all respects according to their true intent and meaning, then this obligation shall become null and void; otherwise, it shall be and remain in full force and effect.

As a condition precedent to the satisfactory completion of the Contract, the above obligation shall hold good for a period equal to the warranty and/or guarantee period of the Contract, during which time Surety's obligation shall continue if Contractor shall fail to make full, complete, and satisfactory repair and replacements and totally protect the District from loss or damage resulting from or caused by defective materials or faulty workmanship. The obligations of Surety hereunder shall continue so long as any obligation of Contractor remains. Nothing herein shall limit the District's rights or the Contractor or Surety's obligations under the Contract, law or equity, including, but not limited to, California Code of Civil Procedure section 337.15.

Whenever Principal shall be, and is declared by District to be, in default under the Contract, the Surety shall promptly either remedy the default, or, if the Contract is terminated by District or the Principal's performance of the Work is discontinued, Surety shall promptly complete the Contract through its agents or independent contractors, subject to acceptance of such agents or independent contractors by District as hereinafter set forth, in accordance with its terms and conditions and to pay and perform all obligations of Principal under the Contract (including, without limitation, all obligations with respect to payment of liquidated damages) less the "Balance of the Contract Price" (as hereinafter defined); subject to the penal amount of this bond as set forth above. The term "Balance of the Contract Price", as used in this paragraph, shall mean the total amount payable to Principal by District under the Contract and any modifications thereto, less the amount previously paid by District to the Principal and less amounts that District is authorized to withhold under the terms of the Contract.

If District determines that completion of the Contract by Surety or its agents or independent contractors must be performed by a lowest responsible bidder selected pursuant to a competitive bidding process, then Surety shall comply with such processes in accordance with the requirements of District and applicable laws. Unless otherwise approved by District, in the exercise of its sole and absolute discretion, Surety shall not utilize Principal in completing performance of the Work.

No right of action shall accrue on this bond to or for the use of any person or entity other than District or its successors or assigns.

In the event any legal proceeding or arbitration is brought upon this bond by District and judgment or award is entered in favor of District as the prevailing party, Surety shall pay all costs and attorney's fees incurred by the District.

Correspondence or claims relating to this bond shall be sent to Surety at the address set forth below.

Surety, for value received, agrees that no change, extension of time, alteration or addition to the terms of the Contract, or to the work to be performed thereunder, shall in any way impair or affect Surety's obligation under this bond, and Surety does hereby waive notice of any such changes, extensions of time, alterations or additions.

Surety's obligations hereunder are independent of the obligations of any other surety for the performance of the Contract, and suit may be brought against Surety and such other sureties, joint and severally, or against any one or more of them or against less than all of them, without impairing District's rights against the others.

Dated: November 17, 2021

KEC Engineering
(Proper name of Principal)

(Corporate Seal of Principal, if Corporation)

By: _____
Signature of Principal's authorized representative

JAMES ELFRING, PRESIDENT
Print or type authorized representative's Name and Title

200 N. Sherman Avenue
Print or type Principal's Address

Corona, CA 92882

(Corporate Seal of Surety)

Surety Liberty Mutual Insurance Company

By: _____
Attorney-in-Fact, Paul A. Bland

Seal No. 5747

(Attach Attorney-in-Fact Certificate and Required Acknowledgments)

GMGS Risk Management & Insurance Services
Name and Address of California Agent of Surety

6201 Oak Canyon, Suite 100

Irvine, CA 92618

(949) 559-6700
Telephone Number of California Agent of Surety

NOTE: Notary acknowledgment of signatures of Principal and Surety, and Surety's Power of Attorney, must be included or attached.

ACKNOWLEDGMENT

A notary public or other officer completing this certificate verifies only the identity of the individual who signed the document to which this certificate is attached, and not the truthfulness, accuracy, or validity of that document.

State of California
County of Riverside)

On November 18, 2021 before me, Nathan A. Elfring, Notary Public
(insert name and title of the officer)

personally appeared James Elfring,
who proved to me on the basis of satisfactory evidence to be the person~~(s)~~ whose name~~(s)~~ is/~~are~~ subscribed to the within instrument and acknowledged to me that he/~~she/they~~ executed the same in his/~~her/their~~ authorized capacity(~~ies~~), and that by his/~~her/their~~ signature~~(s)~~ on the instrument the person~~(s)~~, or the entity upon behalf of which the person~~(s)~~ acted, executed the instrument.

I certify under PENALTY OF PERJURY under the laws of the State of California that the foregoing paragraph is true and correct.

WITNESS my hand and official seal.

NATHAN A. ELFRING
Notary Public – California
Riverside County
Commission # 2231453
My Comm. Expires Feb 16, 2022

Signature _____ **(Seal)**

ACKNOWLEDGMENT

A notary public or other officer completing this certificate verifies only the identity of the individual who signed the document to which this certificate is attached, and not the truthfulness, accuracy, or validity of that document.

State of California
County of Orange)

On November 17, 2021 before me, Candy A. Dakin, Notary Public
(insert name and title of the officer)

personally appeared Paul A. Bland,
who proved to me on the basis of satisfactory evidence to be the person(~~s~~) whose name(~~s~~) is/~~are~~ subscribed to the within instrument and acknowledged to me that he/~~she~~/~~they~~ executed the same in his/~~her~~/~~their~~ authorized capacity(~~ies~~), and that by his/~~her~~/~~their~~ signature(~~s~~) on the instrument the person(~~s~~), or the entity upon behalf of which the person(~~s~~) acted, executed the instrument.

I certify under PENALTY OF PERJURY under the laws of the State of California that the foregoing paragraph is true and correct.

WITNESS my hand and official seal.

NRO1 CANDY A. DAKIN
COMM. #2364904
Notary Public · California
Orange County
My Comm. Expires Aug. 3, 2025 NRO1

Signature _____ **(Seal)**

This Power of Attorney limits the acts of those named herein, and they have no authority to bind the Company except in the manner and to the extent herein stated.

Liberty Mutual Insurance Company
The Ohio Casualty Insurance Company
West American Insurance Company

Certificate No: **8205866-024087**

POWER OF ATTORNEY

KNOWN ALL PERSONS BY THESE PRESENTS: That The Ohio Casualty Insurance Company is a corporation duly organized under the laws of the State of New Hampshire, that Liberty Mutual Insurance Company is a corporation duly organized under the laws of the State of Massachusetts, and West American Insurance Company is a corporation duly organized under the laws of the State of Indiana (herein collectively called the "Companies"), pursuant to and by authority herein set forth, does hereby name, constitute and appoint, Candy A Dakin; Cynthia S. Wozney; Denise Bennett; Edward W. Griffith II; Paul A. Bland; Steven C. Mosier

all of the city of Irvine state of CA each individually if there be more than one named, its true and lawful attorney-in-fact to make, execute, seal, acknowledge and deliver, for and on its behalf as surety and as its act and deed, any and all undertakings, bonds, recognizances and other surety obligations, in pursuance of these presents and shall be as binding upon the Companies as if they have been duly signed by the president and attested by the secretary of the Companies in their own proper persons.

IN WITNESS WHEREOF, this Power of Attorney has been subscribed by an authorized officer or official of the Companies and the corporate seals of the Companies have been affixed thereto this 29th day of June, 2021.

LIBERTY MUTUAL INSURANCE COMPANY INCORPORATED 1912 MASSACHUSETTS — THE OHIO CASUALTY INSURANCE COMPANY INCORPORATED 1919 NEW HAMPSHIRE — WEST AMERICAN INSURANCE COMPANY INCORPORATED 1991 INDIANA

Liberty Mutual Insurance Company
The Ohio Casualty Insurance Company
West American Insurance Company

By: David M. Carey, Assistant Secretary

State of PENNSYLVANIA
County of MONTGOMERY ss

On this 29th day of June, 2021 before me personally appeared David M. Carey, who acknowledged himself to be the Assistant Secretary of Liberty Mutual Insurance Company, The Ohio Casualty Company, and West American Insurance Company, and that he, as such, being authorized so to do, execute the foregoing instrument for the purposes therein contained by signing on behalf of the corporations by himself as a duly authorized officer.

IN WITNESS WHEREOF, I have hereunto subscribed my name and affixed my notarial seal at King of Prussia, Pennsylvania, on the day and year first above written.

TERESA PASTELLA COMMONWEALTH OF PENNSYLVANIA NOTARY PUBLIC

Commonwealth of Pennsylvania - Notary Seal
Teresa Pastella, Notary Public
Montgomery County
My commission expires March 28, 2025
Commission number 1126044
Member, Pennsylvania Association of Notaries

By: Teresa Pastella, Notary Public

This Power of Attorney is made and executed pursuant to and by authority of the following By-laws and Authorizations of The Ohio Casualty Insurance Company, Liberty Mutual Insurance Company, and West American Insurance Company which resolutions are now in full force and effect reading as follows:

ARTICLE IV – OFFICERS: Section 12. Power of Attorney.
Any officer or other official of the Corporation authorized for that purpose in writing by the Chairman or the President, and subject to such limitation as the Chairman or the President may prescribe, shall appoint such attorneys-in-fact, as may be necessary to act in behalf of the Corporation to make, execute, seal, acknowledge and deliver as surety any and all undertakings, bonds, recognizances and other surety obligations. Such attorneys-in-fact, subject to the limitations set forth in their respective powers of attorney, shall have full power to bind the Corporation by their signature and execution of any such instruments and to attach thereto the seal of the Corporation. When so executed, such instruments shall be as binding as if signed by the President and attested to by the Secretary. Any power or authority granted to any representative or attorney-in-fact under the provisions of this article may be revoked at any time by the Board, the Chairman, the President or by the officer or officers granting such power or authority.

ARTICLE XIII – Execution of Contracts: Section 5. Surety Bonds and Undertakings.
Any officer of the Company authorized for that purpose in writing by the chairman or the president, and subject to such limitations as the chairman or the president may prescribe, shall appoint such attorneys-in-fact, as may be necessary to act in behalf of the Company to make, execute, seal, acknowledge and deliver as surety any and all undertakings, bonds, recognizances and other surety obligations. Such attorneys-in-fact subject to the limitations set forth in their respective powers of attorney, shall have full power to bind the Company by their signature and execution of any such instruments and to attach thereto the seal of the Company. When so executed such instruments shall be as binding as if signed by the president and attested by the secretary.

Certificate of Designation – The President of the Company, acting pursuant to the Bylaws of the Company, authorizes David M. Carey, Assistant Secretary to appoint such attorneys-in-fact as may be necessary to act on behalf of the Company to make, execute, seal, acknowledge and deliver as surety any and all undertakings, bonds, recognizances and other surety obligations.

Authorization – By unanimous consent of the Company's Board of Directors, the Company consents that facsimile or mechanically reproduced signature of any assistant secretary of the Company, wherever appearing upon a certified copy of any power of attorney issued by the Company in connection with surety bonds, shall be valid and binding upon the Company with the same force and effect as though manually affixed.

I, Renee C. Llewellyn, the undersigned, Assistant Secretary, The Ohio Casualty Insurance Company, Liberty Mutual Insurance Company, and West American Insurance Company do hereby certify that the original power of attorney of which the foregoing is a full, true and correct copy of the Power of Attorney executed by said Companies, is in full force and effect and has not been revoked.

IN TESTIMONY WHEREOF, I have hereunto set my hand and affixed the seals of said Companies this 17TH day of NOVEMBER, 2021.

LIBERTY MUTUAL INSURANCE COMPANY INCORPORATED 1912 MASSACHUSETTS — THE OHIO CASUALTY INSURANCE COMPANY INCORPORATED 1919 NEW HAMPSHIRE — WEST AMERICAN INSURANCE COMPANY INCORPORATED 1991 INDIANA

By: Renee C. Llewellyn, Assistant Secretary

Not valid for mortgage, note, loan, letter of credit, currency rate, interest rate or residual value guarantees.

For bond and/or Power of Attorney (POA) verification inquiries, please call 610-832-8240 or email HOSUR@libertymutual.com.

Issued in Quadruplicate

PAYMENT BOND

Bond Number: 024255478
Premium included in the Performance Bond

(Public Work - Civil Code Sections 9550 et seq.)

WHEREAS, the Riverside County Flood Control and Water Conservation District ("District") by action of the Board of Supervisors on January 11, 2022, has awarded Construction Contract Number: 3-0-000200 ("Contract") to the undersigned KEC Engineering, as Principal ("Principal") to perform the work ("Work") for the following project; Lakeland Village MDP Line H.

WHEREAS, said Principal is required by the Contract and/or by the California Civil Code Section 9550 et seq. to furnish a payment bond in connection with the Contract;

NOW THEREFORE, we, the Principal and Liberty Mutual Insurance Company ("Surety"), an admitted surety insurer pursuant to Code of Civil Procedure, Section 995.120, are held and firmly bound unto District in the penal sum of Thirteen Million One Hundred Forty-Five Thousand One Hundred Thirty and 70/100--- Dollars ($13,145,130.70---), this amount being not less than one hundred percent (100%) of the total sum payable by District under the Contract at the time the Contract is awarded by District to the Principal, lawful money of the United States of America, for the payment of which sum well and truly to be made, we, Principal and Surety, bind ourselves, our heirs, executors, administrators, successors and assigns, jointly and severally, firmly by these presents.

THE CONDITION OF THIS OBLIGATION IS SUCH that if Principal, its heirs, executors, administrators, successors, or assigns approved by District, or its subcontractors, of any contracting tier, shall fail to pay any amounts or any person or persons named and described in California Civil Code, Section 9554, then Surety will pay for the same, in or to an amount not exceeding the penal amount hereinabove set forth, and also will pay to the prevailing party if suit is brought upon this bond, reasonable attorney's fees as provided in California Civil Code, Section 9564.

Surety, for value received, agrees that no change, extension of time, alteration or addition to the terms of the Contract, or to the Work to be performed thereunder, nor any rescission or attempted rescission of the Contract or this bond, nor any conditions precedent or subsequent in the bond or Contract attempting to limit the right of recovery of any claimant otherwise entitled to recover under the Contract or this bond shall in any way impair or affect Surety's obligation under this bond, and Surety does hereby waive notice of any such changes, extensions of time, alterations or additions.

Surety is not released from liability to those for whose benefit this bond has been given, by reason of any breach of the Contract by District or Principal.

It is hereby expressly stipulated and agreed that this bond shall inure to the benefit of any and all persons, companies, and corporations entitled to file claims under Section 9100 of the Civil Code, so as to give a right of action to them or their assigns in any suit brought upon this bond.

Surety's obligations hereunder are independent of the obligations of any other surety for the performance of the Contract, and suit may be brought against Surety and such other sureties, joint and severally, or against any one or more of them or against less than all of them, without impairing District's rights against the others.

Dated: November 17, 2021

KEC Engineering
(Proper name of Principal)

(Corporate Seal of Principal, if Corporation)

By: _____
Signature of Principal's authorized representative

JAMES ELFRING, PRESIDENT
Print or type authorized representative's Name and Title

200 N. Sherman Avenue
Print or type Principal's Address

Corona, CA 92882

(Corporate Seal of Surety)

Seal No. 5747

Surety Liberty Mutual Insurance Company

By: _____
Attorney-in-Fact , Paul A. Bland

(Attach Attorney-in-Fact Certificate and Required Acknowledgments)

GMGS Risk Management & Insurance Services
Name and Address of California Agent of Surety

6201 Oak Canyon, Suite 100

Irvine, CA 92618

(949) 559-6700
Telephone Number of California Agent of Surety

NOTE: Notary acknowledgment of signatures of Principal and Surety, and Surety's Power of Attorney, must be included or attached.

ACKNOWLEDGMENT

A notary public or other officer completing this certificate verifies only the identity of the individual who signed the document to which this certificate is attached, and not the truthfulness, accuracy, or validity of that document.

State of California
County of Riverside)

On November 18, 2021 before me, Nathan A. Elfring, Notary Public
(insert name and title of the officer)

personally appeared James Elfring,
who proved to me on the basis of satisfactory evidence to be the person(~~s~~) whose name(~~s~~) is/~~are~~ subscribed to the within instrument and acknowledged to me that he/~~she/they~~ executed the same in his/~~her/their~~ authorized capacity(~~ies~~), and that by his/~~her/their~~ signature(~~s~~) on the instrument the person(~~s~~), or the entity upon behalf of which the person(~~s~~) acted, executed the instrument.

I certify under PENALTY OF PERJURY under the laws of the State of California that the foregoing paragraph is true and correct.

WITNESS my hand and official seal.

NATHAN A. ELFRING
Notary Public – California
Riverside County
Commission # 2231453
My Comm. Expires Feb 16, 2022

Signature _____ **(Seal)**

ACKNOWLEDGMENT

A notary public or other officer completing this certificate verifies only the identity of the individual who signed the document to which this certificate is attached, and not the truthfulness, accuracy, or validity of that document.

State of California
County of Orange)

On November 17, 2021 before me, Candy A. Dakin, Notary Public
(insert name and title of the officer)

personally appeared Paul A. Bland,
who proved to me on the basis of satisfactory evidence to be the person(~~s~~) whose name(~~s~~) is/~~are~~ subscribed to the within instrument and acknowledged to me that he/~~she~~/~~they~~ executed the same in his/~~her~~/~~their~~ authorized capacity(~~ies~~), and that by his/~~her~~/~~their~~ signature(~~s~~) on the instrument the person(~~s~~), or the entity upon behalf of which the person(~~s~~) acted, executed the instrument.

I certify under PENALTY OF PERJURY under the laws of the State of California that the foregoing paragraph is true and correct.

WITNESS my hand and official seal.

NRO1 CANDY A. DAKIN
COMM. #2364904
Notary Public - California
Orange County
My Comm. Expires Aug. 3, 2025 NRO1

Signature Candy A. Dakin **(Seal)**

This Power of Attorney limits the acts of those named herein, and they have no authority to bind the Company except in the manner and to the extent herein stated.

Liberty Mutual. SURETY

Liberty Mutual Insurance Company
The Ohio Casualty Insurance Company
West American Insurance Company

Certificate No: **8205866-024087**

POWER OF ATTORNEY

KNOWN ALL PERSONS BY THESE PRESENTS: That The Ohio Casualty Insurance Company is a corporation duly organized under the laws of the State of New Hampshire, that Liberty Mutual Insurance Company is a corporation duly organized under the laws of the State of Massachusetts, and West American Insurance Company is a corporation duly organized under the laws of the State of Indiana (herein collectively called the "Companies"), pursuant to and by authority herein set forth, does hereby name, constitute and appoint, Candy A Dakin; Cynthia S. Wozney; Denise Bennett; Edward W. Griffith II; Paul A. Bland; Steven C. Mosier

all of the city of Irvine state of CA each individually if there be more than one named, its true and lawful attorney-in-fact to make, execute, seal, acknowledge and deliver, for and on its behalf as surety and as its act and deed, any and all undertakings, bonds, recognizances and other surety obligations, in pursuance of these presents and shall be as binding upon the Companies as if they have been duly signed by the president and attested by the secretary of the Companies in their own proper persons.

IN WITNESS WHEREOF, this Power of Attorney has been subscribed by an authorized officer or official of the Companies and the corporate seals of the Companies have been affixed thereto this 29th day of June, 2021.

Liberty Mutual Insurance Company
The Ohio Casualty Insurance Company
West American Insurance Company

By: David M. Carey, Assistant Secretary

State of PENNSYLVANIA
County of MONTGOMERY ss

On this 29th day of June, 2021 before me personally appeared David M. Carey, who acknowledged himself to be the Assistant Secretary of Liberty Mutual Insurance Company, The Ohio Casualty Company, and West American Insurance Company, and that he, as such, being authorized so to do, execute the foregoing instrument for the purposes therein contained by signing on behalf of the corporations by himself as a duly authorized officer.

IN WITNESS WHEREOF, I have hereunto subscribed my name and affixed my notarial seal at King of Prussia, Pennsylvania, on the day and year first above written.

Commonwealth of Pennsylvania - Notary Seal
Teresa Pastella, Notary Public
Montgomery County
My commission expires March 28, 2025
Commission number 1126044
Member, Pennsylvania Association of Notaries

By: Teresa Pastella, Notary Public

This Power of Attorney is made and executed pursuant to and by authority of the following By-laws and Authorizations of The Ohio Casualty Insurance Company, Liberty Mutual Insurance Company, and West American Insurance Company which resolutions are now in full force and effect reading as follows:

ARTICLE IV – OFFICERS: Section 12. Power of Attorney.
Any officer or other official of the Corporation authorized for that purpose in writing by the Chairman or the President, and subject to such limitation as the Chairman or the President may prescribe, shall appoint such attorneys-in-fact, as may be necessary to act in behalf of the Corporation to make, execute, seal, acknowledge and deliver as surety any and all undertakings, bonds, recognizances and other surety obligations. Such attorneys-in-fact, subject to the limitations set forth in their respective powers of attorney, shall have full power to bind the Corporation by their signature and execution of any such instruments and to attach thereto the seal of the Corporation. When so executed, such instruments shall be as binding as if signed by the President and attested to by the Secretary. Any power or authority granted to any representative or attorney-in-fact under the provisions of this article may be revoked at any time by the Board, the Chairman, the President or by the officer or officers granting such power or authority.

ARTICLE XIII – Execution of Contracts: Section 5. Surety Bonds and Undertakings.
Any officer of the Company authorized for that purpose in writing by the chairman or the president, and subject to such limitations as the chairman or the president may prescribe, shall appoint such attorneys-in-fact, as may be necessary to act in behalf of the Company to make, execute, seal, acknowledge and deliver as surety any and all undertakings, bonds, recognizances and other surety obligations. Such attorneys-in-fact subject to the limitations set forth in their respective powers of attorney, shall have full power to bind the Company by their signature and execution of any such instruments and to attach thereto the seal of the Company. When so executed such instruments shall be as binding as if signed by the president and attested by the secretary.

Certificate of Designation – The President of the Company, acting pursuant to the Bylaws of the Company, authorizes David M. Carey, Assistant Secretary to appoint such attorneys-in-fact as may be necessary to act on behalf of the Company to make, execute, seal, acknowledge and deliver as surety any and all undertakings, bonds, recognizances and other surety obligations.

Authorization – By unanimous consent of the Company's Board of Directors, the Company consents that facsimile or mechanically reproduced signature of any assistant secretary of the Company, wherever appearing upon a certified copy of any power of attorney issued by the Company in connection with surety bonds, shall be valid and binding upon the Company with the same force and effect as though manually affixed.

I, Renee C. Llewellyn, the undersigned, Assistant Secretary, The Ohio Casualty Insurance Company, Liberty Mutual Insurance Company, and West American Insurance Company do hereby certify that the original power of attorney of which the foregoing is a full, true and correct copy of the Power of Attorney executed by said Companies, is in full force and effect and has not been revoked.

IN TESTIMONY WHEREOF, I have hereunto set my hand and affixed the seals of said Companies this 17TH day of NOVEMBER, 2021.

By: Renee C. Llewellyn, Assistant Secretary

LMS-12873 LMIC OCIC WAIC Multi Co 02/21

Not valid for mortgage, note, loan, letter of credit, currency rate, interest rate or residual value guarantees.

For bond and/or Power of Attorney (POA) verification inquiries, please call 610-832-8240 or email HOSUR@libertymutual.com.

Liberty Mutual.
SURETY

Liberty Mutual Surety
1001 4th Ave Ste 3800
Office: 206-473-3533

As part of its business continuity efforts during the pendency of the COVID-19 pandemic, Liberty Mutual Insurance Company ("LMIC") on behalf of itself and the companies listed below has authorized its Attorneys-in-Fact to affix its corporate seal for surety obligations in a digital format in lieu of its traditional raised seal to any bond issued on its behalf by any such Attorney-in-Fact:

Liberty Mutual Insurance Company
Liberty Mutual Fire Insurance Company
The Ohio Casualty Insurance Company
West American Insurance Company
Safeco Insurance Company of America
American States Insurance Company

Please note that the digital seal utilized by our authorized agents will also include their agency specific reference number.

LMIC agrees and affirms on behalf of itself and the other companies listed herein, that the digital corporate seal referenced above has the same binding effect when affixed to a bond or a Power of Attorney document as if it were a raised corporate seal.

Effective this 23rd day of March, 2020.

By: _____
Renee C. Llewellyn, Assistant Secretary

WORKERS' COMPENSATION CONTRACTOR CERTIFICATE

(Labor Code Sections 1860, 1861 & 3700)

In accordance with the provisions of Section 3700 of the Labor Code, every Contractor shall secure compensation in one or more of the following ways:

(a) By being insured against liability to pay compensation by one or more insurers duly authorized to write compensation insurance in this state.

(b) By securing from the Director of Industrial Relations a certificate of consent to self-insure either as an individual employer, or as one employer in a group of employers, which may be given upon furnishing proof satisfactory to the Director of Industrial Relations of ability to self-insure and to pay any compensation that may become due to his or her employees.

(c) For any county, city, city and county, municipal corporation, public district, public agency, or any political subdivision of the state, including each member of a pooling arrangement under a joint exercise of powers agreement (but not the state itself), by securing from the Director of Industrial Relations a certificate of consent to self-insure against workers' compensation claims, which certificate may be given upon furnishing proof satisfactory to the director of ability to administer workers' compensation claims properly, and to pay workers' compensation claims that may become due to its employees. On or before March 31, 1979, a political subdivision of the state which, on December 31, 1978, was uninsured for its liability to pay compensation, shall file a properly completed and executed application for a certificate of consent to self-insure against workers' compensation claims. The certificate shall be issued and be subject to the provisions of Section 3702.

Labor Code Section 1861 requires each Contractor to whom a public works Contract is awarded shall sign and file with the District the following certification prior to performing the Work of the public works construction Contract:

I am aware of the provisions of Section 3700 of the Labor Code which require every employer to be insured against liability for workers' compensation or to undertake self-insurance in accordance with the provisions of that code, and I will comply with such provisions before commencing the performance of the Work of this Contract.

By signing this certification, the Contractor understands the requirements of and agrees to comply with the aforementioned requirements.

Name of Contractor: KEC Engineering

By: _____

Title: James Elfring, President

DECLARATION OF SUFFICIENCY OF FUNDS

(California Labor Code Section 2810)

I, the undersigned, an authorized representative of KEC Engineering ("Bidder") with authority to make the statements contained in this Declaration on behalf of Bidder, hereby declare the following:

1. The Bidder's employer identification number for state tax purposes is: 33-0641527.

2. The Bidder's workers' compensation insurance policy number is: UB-7N792894-19-26-G,

   and the name, address, and telephone number of the insurance carrier providing said insurance is:
   Travelers
   One Tower Square (949) 559-3367
   Hartford, CT 06183.

3. The following information is provided concerning any and all vehicles that are owned by the Bidder and that will be used for transportation in connection with any service provided for the performance of the Work that is the subject of the Bidder's Bid [Insert information requested. Attach additional sheets, if needed.]:

Vehicle	*Vehicle ID #*	*Vehicle. Liability Insurance Policy Number (of policy covering vehicle)*	*Name, Address and Telephone Number of Vehicle Liability Insurance Carrier (issuing policy covering vehicle)*
See Attached List of Vehicles & ID#		810-1N950054-19-26-G	Travelers, One Tower Square Hartford, CT 06183

4. The following is the address of any real property that will be used to house workers in connection with the performance of the Work that is the subject of the Bidder's Bid [If no such housing will be provided, enter "none"]:
   None

0104	98 GMC 3/4T P/U Green	Pickup
0115	00 GMC 3/4T P/U	Pickup
0123	02 Chevy 1500 4X4 P/U	Pickup
0124	01 GMC 3/4T P/U Service Body	Pickup
0126	01 GMC 3/4T P/U Service Body	Pickup
0127	02 GMC 3/4T P/U Service Body	Pickup
0128	02 GMC 3/4T P/U Service Body	Pickup
0131	05 GMC 2500 P/U Service Body	Pickup
0132	06 GMC Sierra 2500 Crew Cab P/U	Pickup
0135	06 GMC Sierra 2500 Crew Cab P/U	Pickup
0138	07 GMC Sierra 3500 Crew Cab Pickup	Pickup
0139	07 GMC Yukon XL Denali	Pickup
0140	07 GMC Sierra 2500 Crew Cab Pickup	Pickup
0144	03 Chevrolet Pickup	Pickup
0145	07 Chevrolet Pickup	Pickup
0146	07 Chevrolet Pickup	Pickup
0147	07 Chevrolet Pickup	Pickup
0148	13 Chevrolet Pickup	Pickup
0149	13 Chevrolet Pickup	Pickup
0150	14 GMC Sierra 1500	Pickup
0151	14 Chevrolet Silverado 3500	Pickup
0152	14 Chevrolet Silverado 3500	Pickup
0153	15 GMC Sierra 2500HD	Pickup
0157	15 Dodge Ram 2500	Pickup
0158	16 Chevrolet Silverado 2500	Pickup
0159	16 Chevrolet Silverado 2500	Pickup
0160	15 Chevrolet Equinox LT	Pickup
0161	17 GMC Sierra 2500HD	Pickup
0162	17 Chevrolet Silverado 3500HD	Pickup
0199	96 Chevy 3/4T P/U Service Body	Pickup
0253	05 Ford F750 Water Truck	Water Truck
0254	97 Athey Sweeper	Sweeper
0255	06 Ford F750XL Water Truck	Water Truck
0256	05 Ford F750 Water Truck	Water Truck
0257	17 Peterbilt 567 Fuel/Lube Truck	Truck
0258	18 Peterbilt 567 Tractor	Tractor
0259	11 Ford F750 Water Truck	Water Truck
0260	13 Ford F750 Water Truck	Water Truck
0261	13 Ford F750 Water Truck	Water Truck
0262	19 Ford F650 Mechanics Truck	Truck

5. The actual or estimated number of workers that will be employed to perform the Work that is the subject of the Bidder's Bid, the total amount of wages to be paid to said workers, and the dates on which said wages will be paid are as follows [Attach additional sheets, if needed.]:

Total Number of Workers	*Total Amount of Wages*	*Date(s) for Payment of Wages*
12	$2,967,355	March 1, 2022 - Oct. 31, 2023

6. Check only one of the following boxes, as applicable:

☐ The statement of number of workers declared in Paragraph 5, above, is a statement of the actual number of workers that will be employed.

☒ The actual number of workers requested in Paragraph 5, above, is unknown and therefore the statement of number of workers declared therein is based on the Bidder's best estimate available at the time of submitting its Bid, rather than the actual number of workers that will be employed and if and when the actual number of workers and the other information requested above is available, it will be reported to the District by Bidder in writing.

7. The actual or estimated total number of persons who will be utilized as independent Contractors to perform the Work of the Project that is the subject of the Bidder's Bid (together with their known, current local, state, and federal Contractor license identification numbers that each is required to have under local, state or federal laws or regulations) are as follows [Attach additional sheets, if needed.]:

List of Independent Contractors	*Current, local, state and federal Contractor license identification number*
N/A	

8. Check only one of the following boxes, as applicable:

☐ The statement of number of independent Contractors declared in Paragraph 7, above, is a statement of the actual number of independent Contractors that will be utilized.

☒ The actual number of independent Contractors requested in Paragraph 7, above, is unknown and therefore the statement of number of independent Contractors declared therein is based on the Bidder's best estimate available at the time of submitting its Bid, rather than the actual number of independent Contractors that will be utilized, and if and when the actual number of independent Contractors and the other information requested above is available, it will be reported to the District by Bidder in writing.

I, the undersigned, declare under penalty of perjury that the foregoing statements are within my personal knowledge and are true and correct. Executed on this 23 day of November, in the year 2021 at Corona, California.

(Signature)

James Elfring
Type Name of Signer:

KEC Engineering
Type Name of Bidder:

CERTIFICATE OF LIABILITY INSURANCE

DATE (MM/DD/YYYY): 11/17/2021

THIS CERTIFICATE IS ISSUED AS A MATTER OF INFORMATION ONLY AND CONFERS NO RIGHTS UPON THE CERTIFICATE HOLDER. THIS CERTIFICATE DOES NOT AFFIRMATIVELY OR NEGATIVELY AMEND, EXTEND OR ALTER THE COVERAGE AFFORDED BY THE POLICIES BELOW. THIS CERTIFICATE OF INSURANCE DOES NOT CONSTITUTE A CONTRACT BETWEEN THE ISSUING INSURER(S), AUTHORIZED REPRESENTATIVE OR PRODUCER, AND THE CERTIFICATE HOLDER.

IMPORTANT: If the certificate holder is an ADDITIONAL INSURED, the policy(ies) must have ADDITIONAL INSURED provisions or be endorsed. If SUBROGATION IS WAIVED, subject to the terms and conditions of the policy, certain policies may require an endorsement. A statement on this certificate does not confer rights to the certificate holder in lieu of such endorsement(s).

PRODUCER
GMGS Risk Management & Insurance Services
6201 Oak Canyon, Suite 100
Irvine, CA 92618

www.gmgs.com 0B84519

CONTACT NAME: Charise Ferguson
PHONE (A/C, No, Ext): (949)559-3367 FAX (A/C, No): (949)559-6703
E-MAIL ADDRESS: charisef@gmgs.com

INSURER(S) AFFORDING COVERAGE	NAIC #
INSURER A: Travelers Property Casualty Company of America	25674 A++ XV
INSURER B: Travelers Indemnity Co of Connecticut	25682 A++ XV
INSURER C:	
INSURER D:	
INSURER E:	
INSURER F:	

INSURED
KEC Engineering (A Corp)
200 North Sherman Avenue
Corona CA 92882

COVERAGES **CERTIFICATE NUMBER:** 65020461 **REVISION NUMBER:**

THIS IS TO CERTIFY THAT THE POLICIES OF INSURANCE LISTED BELOW HAVE BEEN ISSUED TO THE INSURED NAMED ABOVE FOR THE POLICY PERIOD INDICATED. NOTWITHSTANDING ANY REQUIREMENT, TERM OR CONDITION OF ANY CONTRACT OR OTHER DOCUMENT WITH RESPECT TO WHICH THIS CERTIFICATE MAY BE ISSUED OR MAY PERTAIN, THE INSURANCE AFFORDED BY THE POLICIES DESCRIBED HEREIN IS SUBJECT TO ALL THE TERMS, EXCLUSIONS AND CONDITIONS OF SUCH POLICIES. LIMITS SHOWN MAY HAVE BEEN REDUCED BY PAID CLAIMS.

INSR LTR	TYPE OF INSURANCE	ADDL INSD	SUBR WVD	POLICY NUMBER	POLICY EFF (MM/DD/YYYY)	POLICY EXP (MM/DD/YYYY)	LIMITS	
A	✓ COMMERCIAL GENERAL LIABILITY			DT22-CO-9323B109-TIL-21	7/1/2021	7/1/2022	EACH OCCURRENCE	$2,000,000
	CLAIMS-MADE ✓ OCCUR						DAMAGE TO RENTED PREMISES (Ea occurrence)	$300,000
							MED EXP (Any one person)	$5,000
							PERSONAL & ADV INJURY	$2,000,000
	GEN'L AGGREGATE LIMIT APPLIES PER:						GENERAL AGGREGATE	$4,000,000
	POLICY PRO-JECT LOC						PRODUCTS - COMP/OP AGG	$4,000,000
	OTHER:							$
B	AUTOMOBILE LIABILITY			810-1N950054-21-26-G	7/1/2021	7/1/2022	COMBINED SINGLE LIMIT (Ea accident)	$2,000,000
	✓ ANY AUTO						BODILY INJURY (Per person)	$
	OWNED AUTOS ONLY / SCHEDULED AUTOS						BODILY INJURY (Per accident)	$
	✓ HIRED AUTOS ONLY / ✓ NON-OWNED AUTOS ONLY			Physical Damage: Comp $1,000/Coll $2,500			PROPERTY DAMAGE (Per accident)	$
								$
	UMBRELLA LIAB / OCCUR						EACH OCCURRENCE	$
	EXCESS LIAB / CLAIMS-MADE						AGGREGATE	$
	DED / RETENTION $							$
A	WORKERS COMPENSATION AND EMPLOYERS' LIABILITY			UB-7N792894-21-26-G	7/1/2021	7/1/2022	✓ PER STATUTE / OTH-ER	
	ANYPROPRIETOR/PARTNER/EXECUTIVE OFFICER/MEMBER EXCLUDED? Y / N (Mandatory in NH)	N / A					E.L. EACH ACCIDENT	$1,000,000
	If yes, describe under DESCRIPTION OF OPERATIONS below						E.L. DISEASE - EA EMPLOYEE	$1,000,000
							E.L. DISEASE - POLICY LIMIT	$1,000,000

DESCRIPTION OF OPERATIONS / LOCATIONS / VEHICLES (ACORD 101, Additional Remarks Schedule, may be attached if more space is required)

RE: Lakeland Village MOP Line H Project No. 3-0-00020
This certificate may be relied upon only if the certificate addendum referred to herein is attached hereto.

CERTIFICATE HOLDER

Lakeland Village MOP Line H Project No. 3-0-00020

Riverside County Flood Control & Water Conservation District
1995 Market Street
Riverside CA 92501

CANCELLATION

SHOULD ANY OF THE ABOVE DESCRIBED POLICIES BE CANCELLED BEFORE THE EXPIRATION DATE THEREOF, NOTICE WILL BE DELIVERED IN ACCORDANCE WITH THE POLICY PROVISIONS.

AUTHORIZED REPRESENTATIVE
John Garrett

AGENCY CUSTOMER ID: _____

LOC #: _____

ACORD ADDITIONAL REMARKS SCHEDULE

AGENCY		NAMED INSURED
GMGS Risk Management & Insurance Services		KEC Engineering (A Corp) 200 North Sherman Avenue Corona CA 92882
POLICY NUMBER		
CARRIER	NAIC CODE	EFFECTIVE DATE:

ADDITIONAL REMARKS

THIS ADDITIONAL REMARKS FORM IS A SCHEDULE TO ACORD FORM,

FORM NUMBER: 25 **FORM TITLE:** Certificate of Liability (03/16)

HOLDER: Riverside County Flood Control & Water Conservation District

ADDRESS: 1995 Market Street Riverside CA 92501

RE: Lakeland Village MOP Line H Project No. 3-0-00020

As respects General Liability coverage, District, the County of Riverside, Riverside County Transportation Department, Elsinore Valley Municipal Water District, and the United States of America are added as Additional Insured per CGD2460419 attached, and this insurance is primary per CGT1000219 attached.

As respects General Liability coverage, 30-day written notice of cancellation (10 days for non-payment of premium) applies, per ILT4050519 attached.

THIS ENDORSEMENT CHANGES THE POLICY. PLEASE READ IT CAREFULLY.

BLANKET ADDITIONAL INSURED
(Includes Products-Completed Operations If Required By Contract)

This endorsement modifies insurance provided under the following:

COMMERCIAL GENERAL LIABILITY COVERAGE PART

PROVISIONS

The following is added to **SECTION II – WHO IS AN INSURED**:

Any person or organization that you agree in a written contract or agreement to include as an additional insured on this Coverage Part is an insured, but only:

a. With respect to liability for "bodily injury" or "property damage" that occurs, or for "personal injury" caused by an offense that is committed, subsequent to the signing of that contract or agreement and while that part of the contract or agreement is in effect; and

b. If, and only to the extent that, such injury or damage is caused by acts or omissions of you or your subcontractor in the performance of "your work" to which the written contract or agreement applies. Such person or organization does not qualify as an additional insured with respect to the independent acts or omissions of such person or organization.

The insurance provided to such additional insured is subject to the following provisions:

a. If the Limits of Insurance of this Coverage Part shown in the Declarations exceed the minimum limits required by the written contract or agreement, the insurance provided to the additional insured will be limited to such minimum required limits. For the purposes of determining whether this limitation applies, the minimum limits required by the written contract or agreement will be considered to include the minimum limits of any Umbrella or Excess liability coverage required for the additional insured by that written contract or agreement. This provision will not increase the limits of insurance described in Section III – Limits Of Insurance.

b. The insurance provided to such additional insured does not apply to:

(1) Any "bodily injury", "property damage" or "personal injury" arising out of the providing, or failure to provide, any professional architectural, engineering or surveying services, including:

(a) The preparing, approving, or failing to prepare or approve, maps, shop drawings, opinions, reports, surveys, field orders or change orders, or the preparing, approving, or failing to prepare or approve, drawings and specifications; and

(b) Supervisory, inspection, architectural or engineering activities.

(2) Any "bodily injury" or "property damage" caused by "your work" and included in the "products-completed operations hazard" unless the written contract or agreement specifically requires you to provide such coverage for that additional insured during the policy period.

c. The additional insured must comply with the following duties:

(1) Give us written notice as soon as practicable of an "occurrence" or an offense which may result in a claim. To the extent possible, such notice should include:

(a) How, when and where the "occurrence" or offense took place;

(b) The names and addresses of any injured persons and witnesses; and

(c) The nature and location of any injury or damage arising out of the "occurrence" or offense.

(2) If a claim is made or "suit" is brought against the additional insured:

(a) Immediately record the specifics of the claim or "suit" and the date received; and

(b) Notify us as soon as practicable and see to it that we receive written notice of the claim or "suit" as soon as practicable.

(3) Immediately send us copies of all legal papers received in connection with the claim or "suit", cooperate with us in the investigation or settlement of the claim or defense against the "suit", and otherwise comply with all policy conditions.

(4) Tender the defense and indemnity of any claim or "suit" to any provider of other insurance which would cover such additional insured for a loss we cover. However, this condition does not affect whether the insurance provided to such additional insured is primary to other insurance available to such additional insured which covers that person or organization as a named insured as described in Paragraph 4., Other Insurance, of Section IV – Commercial General Liability Conditions.

c. **Method Of Sharing**

If all of the other insurance permits contribution by equal shares, we will follow this method also. Under this approach each insurer contributes equal amounts until it has paid its applicable limit of insurance or none of the loss remains, whichever comes first.

If any of the other insurance does not permit contribution by equal shares, we will contribute by limits. Under this method, each insurer's share is based on the ratio of its applicable limit of insurance to the total applicable limits of insurance of all insurers.

d. **Primary And Non-Contributory Insurance If Required By Written Contract**

If you specifically agree in a written contract or agreement that the insurance afforded to an insured under this Coverage Part must apply on a primary basis, or a primary and non-contributory basis, this insurance is primary to other insurance that is available to such insured which covers such insured as a named insured, and we will not share with that other insurance, provided that:

(1) The "bodily injury" or "property damage" for which coverage is sought occurs; and

(2) The "personal and advertising injury" for which coverage is sought is caused by an offense that is committed;

subsequent to the signing of that contract or agreement by you.

5. **Premium Audit**

a. We will compute all premiums for this Coverage Part in accordance with our rules and rates.

b. Premium shown in this Coverage Part as advance premium is a deposit premium only. At the close of each audit period we will compute the earned premium for that period and send notice to the first Named Insured. The due date for audit and retrospective premiums is the date shown as the due date on the bill. If the sum of the advance and audit premiums paid for the policy period is greater than the earned premium, we will return the excess to the first Named Insured.

c. The first Named Insured must keep records of the information we need for premium computation, and send us copies at such times as we may request.

6. **Representations**

By accepting this policy, you agree:

a. The statements in the Declarations are accurate and complete;

b. Those statements are based upon representations you made to us; and

c. We have issued this policy in reliance upon your representations.

The unintentional omission of, or unintentional error in, any information provided by you which we relied upon in issuing this policy will not prejudice your rights under this insurance. However, this provision does not affect our right to collect additional premium or to exercise our rights of cancellation or nonrenewal in accordance with applicable insurance laws or regulations.

7. **Separation Of Insureds**

Except with respect to the Limits of Insurance, and any rights or duties specifically assigned in this Coverage Part to the first Named Insured, this insurance applies:

a. As if each Named Insured were the only Named Insured; and

b. Separately to each insured against whom claim is made or "suit" is brought.

8. **Transfer Of Rights Of Recovery Against Others To Us**

If the insured has rights to recover all or part of any payment we have made under this Coverage Part, those rights are transferred to us. The insured must do nothing after loss to impair them. At our request, the insured will bring "suit" or transfer those rights to us and help us enforce them.

9. **When We Do Not Renew**

If we decide not to renew this Coverage Part, we will mail or deliver to the first Named Insured shown in the Declarations written notice of the nonrenewal not less than 30 days before the expiration date.

If notice is mailed, proof of mailing will be sufficient proof of notice.

SECTION V – DEFINITIONS

1. "Advertisement" means a notice that is broadcast or published to the general public or specific market segments about your goods, products or services for the purpose of attracting customers or supporters. For the purposes of this definition:

a. Notices that are published include material placed on the Internet or on similar electronic means of communication; and

b. Regarding websites, only that part of a website that is about your goods, products or services for the purposes of attracting customers or supporters is considered an advertisement.

POLICY NUMBER: DT22-CO-9323B109-TIL-21 ISSUE DATE:

KEC Engineering (A Corp)

THIS ENDORSEMENT CHANGES THE POLICY. PLEASE READ IT CAREFULLY.

DESIGNATED PERSON OR ORGANIZATION – NOTICE OF CANCELLATION PROVIDED BY US

This endorsement modifies insurance provided under the following:

ALL COVERAGE PARTS INCLUDED IN THIS POLICY

SCHEDULE

CANCELLATION: **Number of Days Notice:** 30

PERSON OR ORGANIZATION:

ANY PERSON OR ORGANIZATION TO WHOM YOU HAVE AGREED IN A WRITTEN CONTRACT THAT NOTICE OF CANCELLATION OF THIS POLICY WILL BE GIVEN, BUT ONLY IF:

1. YOU SEND US A WRITTEN REQUEST TO PROVIDE SUCH NOTICE, INCLUDING THE NAME AND ADDRESS OF SUCH PERSON OR ORGANIZATION, AFTER THE FIRST NAMED INSURED RECEIVES NOTICE FROM US OF THE CANCELLATION OF THIS POLICY; AND
2. WE RECEIVE SUCH WRITTEN REQUEST AT LEAST 14 DAYS BEFORE THE BEGINNING OF THE APPLICABLE NUMBER OF DAYS SHOWN IN THIS ENDORSEMENT.

ADDRESS:

THE ADDRESS FOR THAT PERSON OR ORGANIZATION INCLUDED IN SUCH WRITTEN REQUEST FROM YOU TO US.

PROVISIONS

If we cancel this policy for any legally permitted reason other than nonpayment of premium, and a number of days is shown for Cancellation in the Schedule above, we will mail notice of cancellation to the person or organization shown in such Schedule. We will mail such notice to the address shown in the Schedule above at least the number of days shown for Cancellation in such Schedule before the effective date of cancellation.

GENERAL PROVISIONS

GENERAL PROVISIONS

SECTION I - DEFINITION OF TERMS

1.01 TERMS. Whenever in these specifications, or in any documents or instruments where these specifications govern, the following terms or pronouns in place of them are used, the intent and meaning shall be interpreted as follows:

(a) DISTRICT: The Riverside County Flood Control and Water Conservation District of the State of California, as created by law, also sometimes referred to as the Flood Control District, or party of the first part.

(b) BOARD OF SUPERVISORS: The Board of Supervisors of the Riverside County Flood Control and Water Conservation District as created by law, also sometimes referred to as the Board.

(c) ENGINEER: The Chief Engineer of the Riverside County Flood Control and Water Conservation District, also sometimes referred to as the Flood Control Engineer, the Chief Engineer, or the General Manager-Chief Engineer, acting either directly or through properly authorized agents, such agents acting within the scope of the particular duties entrusted to them.

(d) LABORATORY: The established laboratory of the District or laboratories authorized by the District to test materials and work involved in the contract.

(e) BIDDER: Any individual, firm or corporation submitting a proposal for the work contemplated, acting directly or through a duly authorized representative.

(f) CONTRACTOR: The person or persons, co-partnership or corporation, private or municipal, who have entered into a contract with the District, as party or parties of the second part or his or their legal representatives.

(g) SUPERINTENDENT: The Executive representative of the Contractor, present on the work at all times during progress, authorized to receive and execute instruction from the Engineer.

(h) PLANS or PROJECT DRAWINGS: The official plans, profiles, typical cross sections, general cross sections, working drawings, and supplemental drawings, or exact reproductions thereof, approved by the Engineer, which show the location, character, dimensions and details of the work to be done, and which are to be considered as a part of the contract supplementary to these specifications.

(i) SPECIFICATIONS: The directions, provisions, and requirements contained herein as supplemented by such special provisions, as may be necessary, pertaining to the method and manner of performing the work or to the quantities and qualities of materials to be furnished under the contract. The Special Provisions are specific clauses setting forth conditions or requirements peculiar to the project under consideration and covering work or materials involved in the proposal and estimate but not satisfactorily covered by these General Provisions. Supplemental agreements

or contract change orders are written agreements executed by the Contractor and by the District, covering alterations, amendments or extensions to the project, as hereinafter provided.

(j) CONTRACT: The written agreement covering the performance of the work and the furnishing of labor and materials in the construction of the work. The contract shall include the Notice to Contractors, the Proposal, Plans, Specifications, Special Provisions, and Contract Bonds, also, any and all supplemental agreements or contract change orders amending or extending the work contemplated and which may be required to complete the work in a substantial and acceptable manner.

(k) CONTRACT PRICE: Shall mean either the lump sum, unit price, or unit prices to be named in the contract, or the total of all payments under the contract at the lump sum, unit price, or unit prices, as the case may be.

(l) SURETY OR SURETIES: The bondsmen or party or parties, approved by the Engineer, who may guarantee the fulfillment of the contract by bond, and whose signatures are attached to said bond.

(m) RIGHT OF WAY: The whole right of way which is reserved for and secured for use in constructing the improvement.

(n) THE WORK: All the work specified in the Specifications and Contract Documents, including the Special Provisions, proposal and contract, or indicated on the plans as the contemplated complete improvement covered by the contract.

1.02 SIMILARITY OF WORDS. Wherever in the specifications or upon the plans the words directed, required, permitted, ordered, designated, prescribed, or words of like import are used, it will be understood that the direction, requirements, permission, order, designation, or prescription of the Flood Control Engineer is intended, and similarly the words approved, acceptable, satisfactory, or words of like import, shall mean approved by, or acceptable to, or satisfactory to, the Flood Control Engineer, unless otherwise expressly stated.

SECTION II - SCOPE OF WORK

2.01 WORK TO BE DONE

It is the intent of these General Provisions, Special Federal Provisions, Special Provisions, Detailed Specifications, and the plans herein referred to, that the Contractor shall provide all labor, power, light, water, materials, equipment, tools, scaffolding, machinery, transportation, insurance, permits, bonds, temporary protection, watchmen, and superintendence necessary to construct and complete all work, and to furnish all materials included in the contract, except those furnished by the District and as specifically mentioned in these specifications.

The contract documents are complementary, and the work called for by any one shall be as binding as if called for by all.

2.02 CONSTRUCTION SCHEDULE

The Contractor shall submit at such times as may be requested by the Engineer, a schedule which shall show the order and dates in which the Contractor proposes to carry on the various parts of the work; including estimated completion dates. The District's receipt of such schedule(s) shall not indicate any concurrence by the District in the items or dates described in the schedule(s).

2.03 DRAWINGS AND SPECIFICATIONS ON THE WORK

The Contractor shall keep one copy of all drawings and specifications on the work, in good order, available to the Engineer and his representatives.

2.04 ESTIMATE OF QUANTITIES

The quantities of work to be done and the materials to be furnished under this contract are approximate only. The District is not to be held responsible for the accuracy of the estimate of quantities.

The Contractor shall judge for himself, after considering all circumstances and conditions, the costs and quantities of materials involved in the contract. The Contractor shall not at any time assert that there was any misunderstanding in regard to the depth or class of the excavations to be made, or the nature or kind or amount of materials to be furnished for the work.

The Contractor shall not at any time assert that there was any misunderstanding in regard to the nature of the work or the kind or amount of materials to be furnished for the work. The Contractor herewith agrees that he will not ask, demand, sue for, or seek to recover, for compensation in excess of the amounts payable for the various unit costs or lump sum charges for the work, as stipulated in the proposal, which he actually performs as specified.

2.05 FEDERALLY FUNDED PROJECT

This project is wholly or partially federally funded and subject to certain requirements including Affirmative Action requirements, Executive Order #11246, equal employment opportunity and others. The aforementioned are described in the "Special Federal Provisions" section of this bid document.

Furthermore, any instance of inconsistency between Federal, State, or local policies, procedures, or standards, the most stringent shall apply.

2.06 PROTESTS

If the Contractor considers any work demanded of him to be outside of the requirements of the contract, or considers any record or ruling of the Engineer to be unfair, he shall immediately, upon such work being demanded or such record of ruling being made, ask, in writing, for written instructions covering protested items of work. Immediately on receipt of written instructions from the Engineer he shall proceed without delay to diligently perform the work in conformance with the written record or ruling. Immediately upon receipt of the written instructions or ruling and before the start of such work, and no later than five (5) business days, the Contractor shall file a

written protest with the Engineer stating clearly and in detail the basis of his protest. Except for such protests as are made of record in the manner herein specified and within the time limit stated, the records, rulings, instructions, or decisions of the Engineer shall be final and conclusive.

2.07 ALTERATIONS

The Contractor understands and agrees that such reasonable alterations and modifications may be made by the Chief Engineer, as may be deemed desirable, and that this may be done without notices to the Sureties on the Contractor's bonds. If such changes result in increased or decreased quantities under the items specified in the Agreement, the Contractor will be paid on the basis of actual quantities as measured by the Engineer, and such changes shall not affect the unit prices bid by the Contractor. If, however, such changes result in delay to the work, the Contractor may request an extension of time on the completion of his contract and the Chief Engineer may grant such extension as the Chief Engineer may deem equitable.

2.08 EXTRA WORK

A. General

The District reserves and shall have the right, for any reason whatsoever, or when confronted with unpredicted conditions, unforeseen events, or emergencies, to revise the details of the contemplated work, or to add work of a different character or function and have the Contractor perform such revised or added work as "Extra Work", when such extra work is considered by the Chief Engineer to be appurtenant to the satisfactory completion of the project.

"Extra Work" is defined as added work of a different character or function and for which no basis for payment is prescribed; or that involving revisions of the details of the work in such manner as to render inequitable payment under items upon which the Contractor bid; or that work which is indeterminate at the time of advertising and is specifically designated as extra work in the plans and Special Provisions.

The signing of the contract by the Contractor will be deemed to be an agreement on his part to perform extra work, as and when ordered by the Chief Engineer. Notice to the Sureties on the Contractor's bonds will not be given unless the estimated total value of the contract, as changed or supplemented, shall exceed the original total bid price by more than 25%.

If required extra work results in delay to the work, the Contractor will be given an equivalent extension of time.

Approval of extra work shall be obtained from the Board of Supervisors before such work is authorized to be done, if:

a. For contracts with a total contract price of $250,000 or less, a change due to extra work exceeds ten percent (10%) of the original contract amount; or

b. For contracts with a total contract price of more than $250,000, a change due to extra work exceeds $25,000 plus one percent (1%) of the original contract amount in excess of $250,000; or

c. An individual change exceeds $100,000; or

d. Cumulative contract changes exceed ten percent (10%) of the original contract amount.

Extra work specially authorized by the Board of Supervisors shall not be included in the cost limitations above stated.

B. Procedure for Extra Work

1. Extra work may not be done by the Contractor without prior request and proper written approval by the District. Upon decision of the District to have extra work performed, the Chief Engineer will so inform the Contractor, acquainting him with the essential details of the new work. The Contractor shall thereupon present in writing a price for said work based upon his estimate of cost and submit said price and estimate to the Chief Engineer whose approval shall be secured before work is started; excepting that the Chief Engineer may, when in the best interest of the District, order the Contractor to proceed with the extra work in advance of the submission of such prices, provided that preliminary estimates, as made by the District, show that the cost will not exceed $1,000.

2. Prices for extra work shall be prepared by the Contractor on one or both of the following methods, as requested by the District, and submitted to the Chief Engineer for approval:

a. For a stated unit price or lump sum amount based upon current prevailing fair prices for materials, labor, plant, overhead and profit.

b. On a cost basis (force account by the Contractor). The cost of all work done by the Contractor will be computed in the manner described in Section 7.03, and the compensation thus provided shall be accepted as payment in full by the Contractor, and no additional payment will be allowed for the use of small tools, superintendent's and foreman's services, timekeeper's services, pickup or yard trucks, except as specifically essential to the work, nor any other overhead expenses incurred in the prosecution of the force account work.

3. Upon receipt of the Contractor's price, the Chief Engineer will make an analysis thereof and adopt one of the following procedures:

a. Accept the Contractor's price for lump sum or unit price amount in the original or amended form and direct him to proceed with the work; or direct him to perform the work on a cost plus basis.

b. Have the work performed by District's forces or separate contract, without undue interference or hindrance to the Contractor and without claim or suit by the Contractor for damages on account thereof.

c. Direct the Contractor to proceed with the work and accept payment therefor in the amount as adjudicated later in a court of law.

4. The price agreed to by the Contractor for the extra work shall be full compensation to the Contractor for all labor, materials, equipment or other costs related to the extra work.

2.09 PAYMENT FOR EXTRA WORK

At the end of each month the Contractor shall make and deliver to the Chief Engineer a statement of the cost of the extra work completed during the current month, itemized and in a form satisfactory to the Chief Engineer. Upon verification of said statement by the Chief Engineer, the Contractor's claim for the full amount, as shown on said statement, will be added to the monthly partial payment made in accordance with Paragraph 7.06 of the General Provisions.

2.10 RIGHTS OF WAY

The District shall provide the rights of way upon which the work under this contract is to be done, except that the Contractor shall provide land required for the erection of temporary construction facilities and storage of his material, together with right of access to same. The District will not be responsible for any delay in furnishing the rights of way and such delay shall not be made the basis for a claim for additional compensation by the Contractor. However, in case the failure of the District to furnish the required rights of way delays the prosecution of the work, the time allowed for completion will be extended by a period of time equal to that lost by the Contractor due to such delay.

2.11 CLEANING UP

The Contractor shall, as directed by the Engineer, remove from the District's right of way and from all public and private property, at his own expense, all temporary structures, rubbish and waste materials resulting from his operations.

SECTION III - CONTROL OF THE WORK

3.01 AUTHORITY OF THE ENGINEER

The Engineer shall have general supervision and direction of the contract under authority of the Board of Supervisors. He has the authority to stop the work whenever such stoppage may be necessary to ensure the proper execution of the contract. The Engineer shall decide all questions which may arise as to the quality or acceptability of materials furnished, work performed, and rate or progress of the work; all questions which may arise as to the interpretation of the plans and specifications; all questions as to the acceptable fulfillment of the contract on the part of the Contractor; and all questions as to compensation.

His determination and decision thereon shall be final and conclusive; and such determination and decision, in case any question shall arise, shall be a condition precedent to the right of the Contractor to receive any money hereunder.

3.02 DETAIL DRAWINGS

The approved plans shall be supplemented by such working drawings as are necessary to control the work adequately. All authorized alterations affecting the requirements and information given on the approved plans shall be in writing. No changes shall be made of any plan or drawing after the same has been approved by the Engineer, except by his direction.

It is expressly understood, however, that approval by the Engineer of the Contractor's working drawings does not relieve the Contractor of any responsibility for accuracy of dimensions and details. It is mutually agreed that the Contractor shall be responsible for agreement and conformity of his working drawings with the approved plans and specifications.

Full compensation for furnishing all working drawings shall be considered as included in the prices paid for the various contract items of work, and no additional allowance will be made therefor.

3.03 CONFORMITY WITH PLANS AND ALLOWABLE DEVIATIONS

Finished surfaces in all cases shall conform with the elevations, lines, grades, cross-sections, and dimensions shown on the approved plans or as described in the Specifications and Contract Documents. Deviations from the approved plans and working drawings, will in all cases be in the Engineer's discretion and as determined by the Engineer and preauthorized in writing.

3.04 INTERPRETATION OF PLANS AND SPECIFICATIONS

Should it appear that the work to be done or any of the matters relative thereto are not sufficiently detailed or explained in these specifications and the Special Provisions, the Contractor must bring this to District's attention in writing and shall apply to the Engineer for such further explanations as may be necessary and shall conform to the same part of the contract, so far as may be consistent with the original specifications; and in the event of any doubt or questions arising respecting the true meaning of the specifications; reference shall be made to the Engineer, whose decision thereon shall be final. The requirements in this section shall also apply during the bidding process and before submittal of the Contractor's Proposal.

In the event of any discrepancy between any drawings and the figures written thereon, the figures shall be taken as correct. The Contractor will not be allowed to take advantage of errors and omissions in the drawings and specifications. When errors or omissions are found, they will be corrected or supplied by the Engineer.

3.05 SUPERINTENDENCE

The Contractor shall keep on his work, continually during its progress, a competent Superintendent responsible for the construction of the work, and any necessary assistants; all satisfactory to the Engineer. All such persons shall be acceptable to the District continuously throughout the duration of the Project. The Superintendent shall represent the Contractor in his absence and all directions given to him shall be as binding as if given to the Contractor. Important directions shall be confirmed in writing to the Contractor. Other directions shall be so confirmed on written request in each case.

3.06 LINES AND GRADES

The Contractor shall provide reasonable and necessary opportunities and facilities for setting points and making measurements. He shall not proceed until he has made timely demand upon the Engineer for, and has received from him, such lines and grades as may be necessary as the work progresses. The work shall be done in strict conformity with such lines and grades.

The Contractor shall carefully preserve benchmarks, reference points and stakes, and in case of willful or careless destruction, he shall be charged with the resulting expense and shall be responsible for any mistakes that may be caused by their unnecessary loss or disturbance.

3.07 INSPECTION OF WORK

The Engineer and his representatives shall at all times have access to the work during its construction, and shall be furnished with every reasonable opportunity and facility for ascertaining that the stock and materials used and employed, and the workmanship, are in accordance with the requirements and intentions of these specifications. All work done and all materials furnished shall be subject to the Engineer's inspection and approval to ensure design objectives.

The inspection of the work shall not relieve the Contractor of any of his obligations to fulfill his contracts as prescribed, and defective work shall be made good and unsuitable materials may be rejected, notwithstanding that such defective work and materials have been previously overlooked by the Engineer and accepted or estimated for payment.

3.08 REMOVAL OF DEFECTIVE AND UNAUTHORIZED WORK

All work which has been rejected shall be remedied, or removed and replaced by the Contractor in an acceptable manner and no compensation will be allowed him for such removal or replacement. Any work done beyond the lines and grades shown on the plans or established by the Engineer, or any extra work done without written authority, will be considered as unauthorized and will not be paid for. Work so done may be ordered removed at the Contractor's expense. Upon failure on the part of the Contractor to comply forthwith with any order of the Engineer made under the provisions of this article, the Engineer shall have authority to cause defective work to be remedied, or removed and replaced, and unauthorized work to be removed and to deduct the costs for this work from any monies due or to become due the Contractor.

3.09 EQUIPMENT AND PLANT

Equipment not suitable to produce the quality of work required will not be permitted to operate on the project. Plants shall be designed and constructed in accordance with general practice for such equipment and shall be of sufficient capacity and of such character to ensure the production of sufficient material to carry the work to completion within the time limit.

The Contractor shall provide adequate and suitable equipment and plants to meet the above requirements and, when ordered by the Engineer, shall remove unsuitable equipment from the work and discontinue the operation of unsatisfactory plants. No worn or obsolete equipment shall be used, and in no case shall the maker's rating of the capacity for any equipment be exceeded.

All vehicles used to haul materials over existing highways shall be equipped with pneumatic tires.

3.10 FINAL INSPECTION

The Engineer will not make the final inspection until the work provided for and contemplated by the contract has been completed and the final cleaning up performed.

SECTION IV - CONTROL OF MATERIAL

4.01 DISTRICT FURNISHED MATERIALS

The Contractor shall furnish all materials required to complete the work, except those specified in the Special Provisions to be furnished by the District. Materials furnished by the District will be delivered to the Contractor at the points specified in the Special Provisions.

The Contractor will be held responsible for all materials so delivered to him, and deductions will be made from any monies due him to make good any shortages and deficiencies, from any cause whatsoever, which may occur after such delivery, or for any demurrage charges due to delinquency in unloading.

4.02 SOURCE OF SUPPLY AND QUALITY OF MATERIALS

At the option of the Engineer the source of supply of each of the materials shall be approved by him before the delivery is started. Only materials conforming to the requirements of these specifications and approved by the Engineer shall be used in the work. All materials proposed for use may be inspected or tested at any time during their preparation and use. If, after trial, it is found that sources of supply which have been approved do not furnish a uniform product, or if the product from any source proves unacceptable at any time, the Contractor shall furnish approved material from other approved sources. No material which, after approval, subsequently becomes unfit for use shall be used in the work.

Wherever the name, or brand, or manufacturer of an item is specified, it is used as a measure of quality and utility or a standard. Except in those instances where the product is designated to match others presently in use, or as otherwise stated in the Contract Documents, specifications calling for a designated material, product, thing or service by specific brand or trade name shall be deemed to be followed by the words "or equal" so that the Contractor may propose in the Contractor's bid any equal material, product, thing or service. If the Contractor desires to use any other brand or manufacturer of equal quality or utility to that specified, he shall list definite particulars of that which it considers equivalent to the specified item in its bid. The District will then determine whether or not the proposed name brand or article is equal in quality and utility to that specified, and the District's determination in that regard shall be final and binding upon the Contractor.

4.03 SAMPLES AND TESTS

All tests of materials furnished by the Contractor shall be made by the District in accordance with commonly recognized standards of national organizations, and such special methods and tests as are in use at the District's approved laboratory and described in the Detailed Specifications.

Field tests of materials will also be made by the Engineer when deemed necessary and these tests shall be made in accordance with standard practices of the District.

The Contractor shall furnish such samples of all materials as are requested by the Engineer without charge. No material shall be used until it has been approved by the Engineer. Samples will be secured and tested whenever necessary to determine the quality of the material.

Promptly after the approval of the contract, the Contractor shall notify the Engineer of the proposed sources of supply of all materials to be furnished by him, using a form which will be supplied by the Engineer upon request.

Whenever reference is made in these specifications to standard tests or requirements of the laboratory of the District, the American Society for Testing Materials, the American Railway Engineering Association, or the American Association of State Highway Officials, the reference shall be construed to mean the standards that are in effect at the date of these specifications with subsequent amendments, changes, or additions as thereafter adopted and published by the organization referred to.

4.04 DIGGING TRENCHES OR OTHER EXCAVATIONS

Any work that involves digging trenches or other excavations extending deeper than four feet below the surface, then the following terms shall apply:

4.04.1 Contractor shall promptly, and before the following conditions are disturbed, notify the District, in writing, of any:

- 4.04.1.1 Material that the Contractor believes may be material that is hazardous waste, as defined in Section 25117 of the Health and Safety Code, that is required to be removed to a Class I, Class II, or Class III disposal site in accordance with provisions of existing law.
- 4.04.1.2 Subsurface or latent physical conditions at the site differing from those indicated by information about the site made available to bidders prior to the deadline for submitting bids.
- 4.04.1.3 Unknown physical conditions at the site of any unusual nature, different materially from those ordinarily encountered and generally recognized as inherent in work of the character provided for in the contract.

4.04.2 The District shall promptly investigate the conditions, and if it finds that the conditions do materially so differ, or do involve hazardous waste, and cause a decrease or increase

in the Contractor's cost of, or the time required for, performance of any part of the work shall issue a change order under the procedures described in the contract.

4.04.3 In the event that a dispute arises between the District and the Contractor whether the conditions materially differ, or involve hazardous waste, or cause a decrease or increase in the Contractor's cost of, or time required for, performance of any part of the work, the Contractor shall not be excused from any scheduled completion date provided for by the contract, but shall proceed with all work to be performed under the contract. The Contractor shall retain any and all rights provided either by contract or by law which pertain to the resolution of disputes and protests between the contracting parties.

4.04.4 Contractor shall submit to District, in advance of excavation, a detailed plan showing the design of shoring, bracing, sloping, or other provisions to be made for worker protection from the hazard of caving ground during the excavation of such trench or trenches. Prior to any excavation is commenced, District shall accept said plan. If such plan varies from the shoring system standards, the plan shall be prepared by a registered civil or structural engineer.

4.04.5 Nothing in this section shall be deemed to allow the use of a shoring, sloping, or protective system less effective than that required by the Construction Safety Orders.

4.04.6 Nothing in this section shall be construed to impose tort liability on the awarding body or any of its employees.

4.05 STORAGE OF MATERIALS

Materials shall be so stored as to ensure the preservation of their quality and fitness for the work. When considered necessary by the Engineer, they shall be placed on wooden platforms or other hard, clean surfaces and not on the ground. They shall be placed under cover when so directed. Stored materials shall be so located as to facilitate prompt inspection.

4.06 DEFECTIVE MATERIALS

All materials not conforming to the requirements of these specifications shall be considered as defective and all such materials, whether in place or not, shall be rejected and shall be removed immediately from the site of the work unless otherwise permitted by the Engineer. No rejected materials, the defects of which have been subsequently corrected, shall be used until approval in writing has been given by the Engineer. Upon failure on the part of the Contractor to comply forthwith with any order of the Engineer made under the provisions of this article, the Engineer shall have authority to remove and replace defective material and to deduct the cost of removal and replacement from any monies due or to become due the Contractor.

4.07 ASSIGNMENT OF CLAIMS

In submitting a bid on this public works project, or any subcontractor agreeing to supply goods, services, or materials, and entering a contract pursuant thereto, the Contractor and/or subcontractor do offer and agree to assign to the District all rights, title, and interest in and to all causes of action it may have under Section 4 of the Clayton Act (15 U.S.C. Section 15) or under the Cartwright Act (Chapter 2 (commencing with Section 16700) of Part 2 of Division 7 of the

Business and Professions Code), arising from purchases of goods, services, or materials pursuant to the public works contract or the subcontract. This assignment shall be made and become effective at the time the awarding body tenders final payment to the Contractor, without further acknowledgment by the parties.

SECTION V - LEGAL RELATIONS AND RESPONSIBILITY

5.01 LAWS TO BE OBSERVED

(a) Compliance with Applicable Law. Reference to and/or incorporation into the Contract Documents of a particular law, statute, ordinance, rule or regulation is not, nor is it intended to be, a definitive statement of the law applicable to the Contract Documents and the accomplishment of the work. Contractor must keep informed as to all such applicable law - Federal, State, County, Municipal, District - as it affects the conduct of the work and comply with such law, including, but not limited to, having requisite licenses, obtaining necessary permits, paying necessary fees and taxes, posting notices and installing, operating and maintaining safety precautions and facilities. It is likewise Contractor's responsibility to see to it that his subcontractors also fully comply with such applicable law.

If at any time Contractor is of the opinion that there is a discrepancy or inconsistency in the plans, drawings, specifications or other Contract Documents, he shall immediately cease work involving such alleged discrepancies or inconsistencies and report the same in writing to the Chief Engineer and shall not proceed with such work until ordered so to do, and in the manner instructed by the Chief Engineer.

Contractor shall protect and defend District, its officers, agents and employees against any claim or liability arising from or based upon any alleged violation of such applicable law. See also Subsection 8.02.

(b) Labor Code - The Contractor shall comply with all applicable requirements of the California Labor Code including but not limited to Labor Code, Chapter 2, Subchapter 1, Article 10, Required Apprentices on Public Works Contracts. Reference is made to Chapter 1, Part 7, Division 2 of the California Labor Code (commencing with Section 1720). By this reference said Chapter 1 is incorporated herein with like effect as if it were here set forth in full. The parties recognize that said Chapter 1 deals with, among other things, discrimination, penalties and forfeitures, their disposition and enforcement, wages, working hours and securing workers' compensation insurance and directly affect the method of prosecution of the work by Contractor and subject it under certain conditions to penalties and forfeitures. Execution of the Agreement by the parties constitutes their agreement to abide by said Chapter 1. Their stipulation as to all matters which they are required to stipulate as to by the provisions of said Chapter 1, constitutes Contractor's certification that it is aware of the provisions of said Chapter 1 and will comply with them and further constitutes Contractor's certification as follows: "I am aware of the provisions of Section 3700 of the California Labor Code which requires every employer to be insured against liability for workers' compensation or to undertake self-insurance in accordance with the provisions of that Code, and I will comply with such provisions before commencing the performance of the work of this contract." Contractor and its subcontractors shall comply with the provisions of Section 1777.5 of the Labor Code regarding apprentices.

Contractor shall post at each job site during the course of the work a copy of District's "Determination of Prevailing Wage Rates", copies of said Determination are available from District for this purpose and at http://www.dir.ca.gov/OPRL/DPreWageDetermination.htm.

(c) Equal Employment Opportunity

General - The Contractor shall comply with all applicable non-discrimination and equal employment laws. The Contractor shall not discriminate in its recruiting, hiring, promotion, demotion or termination practices on the basis of race, religious creed, color, national origin, ancestry, sex, age or physical handicap in the performance of this Contract and shall comply with the provisions of the California Fair Employment Practice Act (commencing with Section 1410 of the Labor Code), the Federal Civil Rights Act of 1964 (P.L. 88-352) and all amendments thereto, Executive Order No. 11246 (30 Federal Register 12319), as amended, and all administrative rules and regulations issued pursuant to said Acts and Order. See particularly 41 Code of Federal Regulation (CFR) Chapter 60.

Contractor shall require each of its subcontractors to comply with the preceding paragraph and shall include in each subcontract language similar to the preceding paragraph.

Contractor shall permit access to its records of employment, employment advertisement, application forms and other pertinent data and records (including but not limited to certified payroll information) by District and any state or federal agency having jurisdiction for the purpose of investigation to ascertain compliance with this section.

District may assign an affirmative action representative to monitor Contractor and its subcontractor(s) conduct required by this section, including the right of entry to the construction site for the purpose of obtaining information from persons performing work on the project providing such inspection does not interfere with the progress of the work.

Elsewhere in the Contract Documents specific requirements may be contained covering the same subject matter of this section. If so, such specific requirements prevail over this section in case of conflict.

Transactions of $10,000 or under - Contracts and subcontracts not exceeding $10,000 are exempt from the requirements of this section. No Contractor or subcontractor shall procure supplies and/or services in less than usual quantities to avoid applicability of this section. With respect to contracts and subcontracts for indefinite quantities, this section applies unless the amount required in any one year under such contract will reasonably be expected not to exceed $10,000.

Transactions in Excess of $10,000 but less than $50,000 - At District's request, Contractor shall certify that it has in effect an affirmative action plan and agrees to comply with all state and federal laws and regulations regarding Fair Employment Practices. Contractor shall maintain a written copy of its affirmative action plan and furnish District a copy of the plan upon request. District may require Contractor to complete an Affirmative Action Compliance Report, on a form furnished by District, setting forth definite goals during the term of this contract.

Transactions of $50,000 or more - If Contractor has 50 or more employees and a contract for $50,000 or more, it shall develop and submit to District, within 30 days after award, a written affirmative action compliance program providing in detail specific steps to guarantee equal employment opportunity. Contractor shall include in its affirmative action program a table of job classifications, which table shall include but need not be limited to job titles, duties and rates of pay.

Contractor shall in each subcontract let to do a portion of the work covered hereunder, where the subcontractor involved has 50 or more employees and the subcontract is for $50,000 or more, impose in the subcontract the above requirements.

For the purpose of determining the number of employees, the average of the Contractor's or its subcontractor's employees for the 12 month period immediately prior to award, or the total number of employees Contractor or its subcontractor will have when performing this contract, whichever is higher, shall be used.

Federally Assisted Construction - If this project is a Federally assisted construction project, then the contract provisions contained 41 CFR § 60-1.4(b) are incorporated herein and Contractor shall likewise incorporate said provisions in each subcontract entered into by Contractor to perform the work. Federally assisted construction is identified as such in the Notice Inviting Bids.

(d) Registration of Contractors - In order to be considered a prospective bidder must be licensed in accordance with Division 3, Chapter 9 (commencing with Section 7000) of the Business and Professions Code.

(e) Accident Prevention - Particular attention shall be given to relevant Division of Industrial Safety Construction and Electrical Safety Orders. Said Orders are contained in Title 8 of the California Code of Regulations, Chapter 4, Subchapters 4 and 5. Specific attention shall be taken of the California Occupational Safety and Health Act of 1973 (commencing with Section 6300 of the Labor Code) and the Federal Occupational Safety and Health Act of 1970 (P.L. 91-596) and rules and regulations issued pursuant to said Acts. Specific reference is made to Article 6 of said Construction Safety Orders. Contractor shall submit to Engineer, who will accept in advance of excavation, a detailed plan showing the design of shoring, bracing, sloping of the sides of trenches, or other provisions to be made for protection of personnel during earthwork operations. In event the Contractor's plan does not conform with the shoring system requirements of Article 6, the Contractor's proposed shoring design shall be prepared and signed by a civil or structural engineer registered in the State of California.

The Contractor shall also impose the foregoing requirements on all subcontractors involved and enforce compliance therewith.

The duties here set forth are nondelegable by Contractor who shall protect and defend District, its officers, agents and employees in connection therewith. See Subsection 8.02.

5.02 CONTRACTOR'S RESPONSIBILITY

Contractor is under the absolute duty in fulfilling its contractual obligations hereunder to proceed, and cause its subcontractors to proceed, in a safe, workmanlike manner, with adequate safeguards for the protection of the public, the workmen and persons from time to time inspecting the work. If at any time Contractor finds any of its subcontractors are allowing work to proceed in an unsafe manner and contrary to the intent of these Contract Documents, Contractor shall immediately cause such action to stop and immediately take all action necessary to protect workmen, inspectors and the general public and cause the work to proceed in a safe manner.

Contractor shall protect and defend District, its officers, agents and employees in reference to acts or omissions contrary to the above. See particularly Subsection 8.02.

District may withhold funds otherwise due Contractor whenever, in its judgment, this subsection is not being complied with.

5.03 CONTRACTOR'S RESPONSIBILITY FOR WORK

Until the formal acceptance of the work by the District, the Contractor shall have the charge and care thereof and shall bear the risk of injury or damage to any part thereof by the action of the elements or from any other cause, whether arising from the execution or from the non-execution of the work. The Contractor shall rebuild, repair, restore, and make good all injuries or damages to any portion of the work occasioned by any of the above causes before its completion and acceptance and shall bear the expense thereof, except for such injuries or damages as are occasioned by acts of the Federal Government and the public enemy. In case of suspension of work from any cause whatsoever, the Contractor shall be responsible for all materials and shall properly store them if necessary and shall erect temporary structures where necessary.

5.04 PROPERTY RIGHTS IN MATERIALS

Nothing in the contract shall be construed as vesting in the Contractor any right of property in the materials used after they have been attached or affixed to the work or the soil. All such materials shall become the property of the District upon being so attached or affixed.

5.05 PERMITS AND LICENSES

The Contractor shall procure all permits and licenses, (including but not limited to: National Pollution Discharge Elimination System (NPDES) and South Coast Air Quality Management District (AQMD) permit requirements), pay all charges and fees, and give all notices necessary and incident to the due and lawful prosecution of the work.

5.06 ROYALTIES AND PATENTS

The Contractor shall assume all costs arising from the use of patented materials, equipment, devices, or processes used on or incorporated on the work, and agrees to indemnify and save harmless the Riverside County Flood Control and Water Conservation District, the Board of Supervisors, the Flood Control Engineer, and their duly authorized representatives, from all suits

at law, or actions of every nature for, or on account of, the use of any patented materials, equipment, devices, or processes.

5.07 SANITARY PROVISIONS

Necessary conveniences, properly secluded from public observation shall be provided by the Contractor where needed for the use of laborers on the work. Their location, construction and maintenance shall be subject to the approval of the Engineer, and their use shall be strictly enforced. The Contractor shall obey and enforce such sanitary regulations as may be prescribed by the State Department of Health or other authorities having jurisdiction.

5.08 PUBLIC SAFETY

The Contractor at his own expense shall furnish, erect, and maintain such fences, barriers, lights, and signs as are necessary to give adequate warning to the public at all times that the bridges, culverts, and work along public highways are under construction; and of any dangerous conditions to be encountered as a result thereof; and he shall erect such warning and directional signs and employ such flagmen as are required and maintain same throughout the construction period.

Full compensation for the work involved in carrying out the precautionary measures above specified shall be considered as included in the prices paid for the various contract items of work and no additional allowance will be made therefor.

5.09 USE OF EXPLOSIVES

When the use of explosives is necessary for the prosecution of the work, the Contractor shall use the utmost care not to endanger life or property.

All explosives shall be stored in accordance with the provisions of Division II, Part I, Chapter 3, of the Health and Safety Code of the State of California.

5.10 PROVISIONS FOR EMERGENCIES

Unusual conditions may arise on the work which will require that immediate and unusual provisions be made to protect the public from danger or loss or damage to life and property, due directly or indirectly to the prosecution of the work, and it is part of the service required of the Contractor to make such provisions and to furnish such protection.

The Contractor shall use such foresight and shall take such steps and precautions as his operations make necessary to protect the public from danger or damage, or loss of life or property, which would result from the interruption or contamination of public water supply, irrigation or other public service, or from the failure of partly completed work.

Whenever work is undertaken pursuant to the above provisions, Contractor shall promptly file with District a verified report setting forth the nature of the emergency and the action taken by the Contractor by reason of the emergency.

Whenever, in the opinion of the Engineer, an emergency exists against which the Contractor has not taken sufficient precaution for the safety of the public or the protection of utilities or of adjacent structures or property which may be injured by process of construction on account of such neglect; and whenever, in the opinion of the Engineer, immediate action shall be considered necessary in order to protect public or private, personal or real property interests, or prevent likely loss of human life or damage on account of the operations under the contract, then and in that event the Engineer may provide suitable protection to said interests by causing such work to be done and material to be furnished as, in the opinion of the Engineer, may seem reasonable and necessary.

The cost and expense of all such emergency work shall be borne by the Contractor, and if he shall not pay said cost and expense upon presentation of the bills therefor, duly certified by the Engineer, then said cost and expense will be paid by the District and shall thereafter be deducted from any amounts due, or which may become due said Contractor. Failure of the District, however, to take such precautionary measures, shall not relieve the Contractor of his full responsibility for public safety.

5.11 UNFORESEEN DIFFICULTIES

All loss or damages, except as noted in Section 8.03, arising out of the nature of the work to be done under the contract, or from any unforeseen obstructions or difficulties which may be encountered during the progress of the work and in the prosecution of the same, or from the action of the elements, or from encumbrances in the line of work, shall be sustained by the Contractor.

5.12 ACCESS TO THE WORK

Access to the work from existing roads shall be provided by the Contractor at his expense and maintained in a manner so as not to create a public nuisance. The Board of Supervisors, Flood Control District and Engineer assume no responsibility for the condition or maintenance of any existing road or structure thereon that may be used by the Contractor for performing the work under these specifications and for traveling to and from the site of the work. No direct payment will be made to the Contractor for constructing temporary roads used for construction operations or for improving, repairing, or maintaining any existing road or structure thereon that may be used by the Contractor for performance of the work under these specifications. The cost of all work described in this paragraph shall be included in the prices bid in the schedule for other items of construction work.

5.13 GUARANTEE OF WORK

All work is guaranteed by Contractor for a period of one year from the recordation of the Notice of Completion against defects resulting from the use of inferior materials, equipment, or workmanship. Upon notice from District, Contractor shall promptly remedy such defects at his expense, including payment to District of its expenses in connection with remedying such defects, otherwise District shall proceed to remedy such defects and Contractor shall upon demand reimburse District for its expenses in connection therewith.

The above one year guarantee is in addition to any specific guarantee(s) provided for elsewhere in the Contract Documents.

The performance of guarantee and conditions specified in Section 5.13., shall be secured by a surety bond which shall be delivered by the Contractor to the District prior to the date on which final payment is made to the Contractor. Said bond shall be in an approved form and executed by a surety company or companies satisfactory to the District, in the amount of 10% of the final contract price. Said bond shall remain in force for the duration of the guarantee period specified in Section 5.13. Instead of providing such a bond as described above, the Contractor may, at its option, provide for the performance bond furnished under the contract to remain in force for said amount until the expiration of said guarantee period; and the amount of said performance bond may be reduced to 10% of the final contract price beginning at the time of recordation of the Notice of Completion.

5.14 DAMAGES BY ACT OF GOD

If the construction of the project herein is damaged, which damage is determined to have been proximately caused by an act of God, in excess of 5% of the contract amount, provided that the work damaged is built in accordance with applicable building standards and the plans and specifications, then the District, may, without prejudice to any other right or remedy, terminate the contract.

SECTION VI - PROSECUTION AND PROGRESS

6.01 PROGRESS OF THE WORK

The Contractor shall begin the work within ten (10) calendar days after the date of the receipt by him of notice to proceed from the Chief Engineer and shall diligently and continuously prosecute the same to completion within the time limit provided in the Special Provisions.

6.02 OVERTIME WORK AND WORK AT NIGHT

It is intended that the Contractor prosecute the work on a five (5) day, forty (40) hour work week with no work on legal holidays. If the Contractor feels it is necessary to work more than the normal forty (40) hour work week, he will make a written request for permission from the Engineer, outlining the reasons for such request. The decision of granting permission for overtime work shall be made by the Engineer and shall be final. A condition will be imposed on the granting of a request to work overtime, requiring the Contractor to pay the District the cost incurred at overtime rates for additional inspection and engineering time required in connection with the overtime work.

When any work is performed at night, only such classes of work shall be done as can be properly inspected. Adequate light must be provided for the safety of the workers and for proper inspection.

6.03 SUBCONTRACTING

Reference is made to the Subletting and Subcontracting Fair Practice Act contained in the Public Contract Code (commencing §4100). By this reference, said Act is incorporated herein

with like effect as if it were here set forth in full and the parties shall abide by its terms and substitution shall be only as allowed by that Act.

Contractor shall be responsible for the acts and omissions of its subcontractors and shall make certain that at all times its subcontractors comply with the terms of the Contract Documents and applicable law insofar as such compliance relates to the work.

District reserves the right to approve all subcontractors whether or not they are required to be listed in the Contractor's Proposal. As used in this section "subcontractor" includes any person who fabricates or manufactures any article for incorporation into the work whether or not they install or test after installation or contract to install or test after installation, but does not include suppliers of fungible goods for incorporation into the work unless such supplier also installs or tests or contracts to install or test.

The Contractor shall give his personal attention to the fulfillment of the contract and shall keep the work under his control. The Contractor shall perform with his own organization work of a value amounting to not less than 60% of the remainder obtained by subtracting from the total original contract value the sum of any item designated herein or in the Special Provisions as Specialty Items. The furnishing and placing of reinforcing steel, when placing is performed by the supplier, will be considered as a Specialty Item for this purpose; however, he shall be designated in the list of subcontractors. The value of the work subcontracted will be based on the contract item bid price. When a portion of an item is subcontracted, the value of work subcontracted will be based on the estimated percentage of the Contract Unit Price. This will be determined from information submitted by the Contractor, and subject to approval by the Engineer.

Where a portion of the work which has been subcontracted by the Contractor is not being prosecuted in a manner satisfactory to the District, the subcontractor shall be removed immediately on the requisition of the Engineer and shall not again be employed on the work.

6.04 CHARACTER OF WORKMEN

If any subcontractor or person employed by the Contractor shall fail or refuse to carry out the directions of the Engineer or shall appear to the Engineer to be incompetent or to act in a disorderly or improper manner, he shall be discharged immediately on the requisition of the Engineer, and such person shall not again be employed on this work.

6.05 TEMPORARY SUSPENSION OF THE WORK

The Engineer shall have the authority to suspend the work wholly or in part, for such period as he may deem necessary, due to unsuitable weather, or to such other conditions as are considered unfavorable for the suitable prosecution of the work, or for such time as he may deem necessary due to the failure on the part of the Contractor to carry out orders given, or to perform any provision of the contract. The Contractor shall immediately comply with the written order of the Engineer to suspend the work wholly or in part. The work shall be resumed when conditions are favorable and methods are corrected, as ordered or approved in writing by the Engineer.

6.06 TIME OF COMPLETION AND DAMAGES

The Contractor shall complete the work called for under the contract in all parts and requirements within the number of working days specified in the Special Provisions. Liquidated damages shall apply as stated in the Special Provisions and the Contract Documents.

A working day is hereby defined as any day; except Saturdays, Sundays, and legal holidays and days on which the Contractor is specifically required by the Special Provisions to suspend construction operations; on which the Contractor is not prevented by inclement weather or conditions resulting immediately therefrom adverse to the current controlling operation or operations, as determined by the Engineer, from proceeding with at least 60% of the normal labor and equipment force engaged in such operation or operations for at least five hours toward completion of such operation or operations.

The Engineer will furnish the Contractor a weekly statement showing the number of working days charged to the contract for the preceding week, the number of working days specified for completion of the contract, and the number of working days remaining to complete the contract. The Contractor will be allowed one week in which to file a written protest setting forth in what respects said weekly statement is incorrect, otherwise the statement shall be deemed to have been accepted by the Contractor as correct.

The following holidays will be considered as legal holidays: New Year's Day; Martin Luther King Jr.'s Birthday, Lincoln's Birthday; Washington's Birthday; Memorial Day; Independence Day; Labor Day; Columbus Day; Veteran's Day; Thanksgiving Day; Christmas; and such other days as are declared holidays by ordinance passed by the Board of Supervisors of the District.

Contractor acknowledges that failure to perform in strict accordance with the Contract Documents and within the time limit specified in the Special Provisions will cause District to suffer special damages in addition to cost of completion of the work in accordance with the provisions of the Contract Documents. Such special damage could include, but is not limited to, lease and rental cost, additional salaries and overhead, interest during construction, attorney expense, additional engineering, inspection expense, cost of maintaining or constructing alternate facilities and injury to the property of the District or others. The daily cost to the District for inspection and superintendence by the District shall be the amount specified in the Special Provisions. The District may withhold from any money due or that may become due the Contractor under the contract, such amount as the District may elect to offset the damages incurred and any withholding or failure to withhold shall not in any way limit recovery for damages actually incurred.

It is further agreed that in case the work called for under the contract is not finished and completed in all parts and requirements within the time specified, the Board of Supervisors shall have the right to extend the time for completion or not, as may seem best to serve the interest of the District, and if it decides to extend the time limit for the completion of the contract, it shall further have the right to charge to the Contractor, his heirs, assigns or sureties and to deduct from the final payment for the work all or any part, as it may deem proper, of the actual cost of engineering, inspection, superintendence, and other overhead expenses which are directly chargeable to the contract, and which accrue during the period of such extension, except that cost of final surveys and preparation of final estimate shall not be included in such charges.

The Contractor shall not be assessed damages nor the cost of engineering and inspection during any delay in the completion of the work caused by acts of God or of the public enemy, acts of the District, encountering unknown utility facilities, fire, floods, epidemics, quarantine restrictions, strikes, freight embargoes, and severe weather or delays of subcontractors due to such causes, provided that the Contractor shall notify the Engineer in writing of the causes of delay within 10 days from the beginning of any such delay, and his findings of the facts thereon shall be final and conclusive. Contractor shall not be assessed damages for delay in the completion of the project, when such delay was caused by the failure of the District or the owner of the utility facilities.

The term "severe weather" shall be construed to mean only such weather as is unreasonable or extraordinary and in the opinion of the Engineer, the work could not be prosecuted by the Contractor during the period throughout which such weather prevailed.

6.07 DELAYS AND EXTENSION OF TIME

If delays are caused by unforeseen causes beyond the control of either the Contractor or the District, such as war, strikes, fire, floods, or other action of the elements, such delays will entitle the Contractor to an equivalent extension of time for the completion of the contract, but the Contractor shall not be entitled to damages or additional payments over and above the contract price due to delay caused by any of the above-mentioned causes. Furthermore, if the Contractor suffers any delay caused by the failure of the District to furnish the necessary right of way or materials agreed to be furnished by it, or by failure to supply necessary plans or instructions concerning the work to be done after written request therefor has been made, the Contractor shall be entitled to an extension of time equivalent to the time lost for any of the above-mentioned reasons, but shall not be entitled to any damages for such delay.

6.08 ASSIGNMENT

The contract may be assigned only upon written consent of the District. Such written consent to sublet, assign or otherwise dispose of any portion of the contract, shall not be construed to relieve the Contractor of any responsibility for the fulfillment of the contract.

6.09 TERMINATION OF CONTRACT

Subject to all applicable provisions of these specifications and/or the contract to be entered into hereunder, the Engineer is hereby empowered to direct the time and rate of delivery of materials at the site of work and to direct the time, rate and sequence of work. If the Contractor fails to begin delivery of material and equipment or to commence work within the time specified herein, and/or in the contract, or to maintain the rates of delivery of materials, or to execute the work in the manner and at such locations as directed by the Engineer, or fails to maintain a program of work in such a manner as will, in the judgment of the Engineer inure to interests of the District, or, if in the judgment of the Engineer, the Contractor is not carrying out the provisions of the contract in their true intent and meaning, written notice by the Chief Engineer may be served upon him and the Surety on his faithful performance bond demanding a satisfactory compliance with the contract, and with these specifications. If the Contractor and/or his Surety refuses or neglects to comply with such notice within five (5) days after receiving same, or after commencing so to do, fails to continue so to do, or has assigned or sublet the contract without the consent of the

District, then the District may exclude him from the premises and take possession thereof, together with all material and equipment thereon, and may complete the work itself, either by force account or by letting the unfinished portion of the work to another Contractor or by a combination of such methods. In any event, the cost of the completion of said work shall be a charge against the Contractor and his Surety and may be deducted from any money due or becoming due from the District, and if the sums due under the contract are insufficient, said Contractor and/or his Surety shall pay to the District within five (5) days after the completion of the work all of such cost in excess of the contract price.

The Surety, in the event that it assumes part of the work, shall take the Contractor's place in this contract in all respects for that part and shall be paid by the District for all work performed by it in accordance with the terms of this contract. If the Surety assumes the entire contract, all monies remaining due the Contractor at the time of his default shall be made payable to the Surety as the work progresses, subject to the terms of the contract.

SECTION VII - PAYMENT

7.01 SCOPE OF PAYMENTS

The Contractor shall accept compensation, as herein provided, in full payment for furnishing all materials, labor, tools, and equipment necessary to the completed work and for performing all work contemplated and embraced under the contract; also for loss or damage arising from the nature of the work, or from the action of the elements, except as hereinbefore provided, or from any unforeseen difficulties which may be encountered during the prosecution of the work until the final acceptance by the Board of Supervisors; and for all risks of description connected with the prosecution of the work, also for all expenses incurred in consequence of the suspension or discontinuance of the work as herein specified; and for completing the work according to the plans and specifications. Neither the payment of any estimate nor of any retained percentage shall relieve the Contractor of any obligation to make good any defective work or material.

7.01A Measurement and Computation of Quantities - All items of the work to be paid for at a contract price per unit of measurement will be measured by the Engineer in accordance with United States Standard Measures. A ton shall mean 2,000 pounds, avoirdupois. Except as otherwise expressly provided in the specifications, the methods of measurement and computation of quantities of such items will be determined by the Engineer, taking into account the price of the item relative to its quantity and the costs of measurement.

The weights of metalwork, pipe, and other metal parts to be paid for by weight will be determined by the Engineer on the basis of handbook weights, scale weights, or manufacturer's catalog weights, or in the absence of any of the foregoing, on the basis of estimated weights; provided, that weights of nonmetallic coatings will be excluded.

7.01B Payment at Contract Prices - The contract price for an item of the work shall include full compensation for all costs of that item, including the costs of any work, materials and equipment incidental to the item but not specifically shown or described in the drawings and specifications, subject only to such express limitations as may be stated in the specifications defining the item or prescribing payment therefor.

The contract prices shall include full compensation for all costs of any work, materials, and equipment required by the drawings and specifications at the time of contract award, but not covered by a contract price or otherwise expressly made the subject of direct payment.

7.02 PAYMENT AND COMPENSATION FOR ALTERED QUANTITIES

When alterations in plans or quantities of work are ordered and performed, the Contractor shall accept payment in full at the contract unit price for the actual quantities of work done and no allowance will be made for anticipated profits. Increased or decreased work involving supplemental agreements will be paid for as stipulated in such agreements.

7.03 FORCE ACCOUNT PAYMENT

When extra work is to be paid for on a force account basis, compensation will be determined as follows:

7.03A Work Performed by Contractor - The Contractor will be paid for labor, materials, and equipment rental as hereinafter provided, except where agreement has been reached to pay in accordance with Section 7.03B. Only materials incorporated in the work will be paid for.

To the total computed as provided in Sections 7.03A(1), 7.03A(2) and 7.03A(3) will be added the following percentages:

Labor	-	24%
Materials	-	15%
Equipment Rental	-	15%

It is understood labor, materials, and equipment may be furnished by the Contractor or by the subcontractor or by others on behalf of the Contractor.

When extra work paid for on a force account basis is performed by forces other than the Contractor's organization, the Contractor shall reach agreement with such other forces as to the distribution of the payment made by the District for such work and no additional payment therefor will be made by the District.

7.03A(1) Labor - The Contractor will be paid the cost of labor for the workmen used in the actual and direct performance of the work. The cost of labor, whether the employer is the Contractor, subcontractor, or other forces, will be the sum of the following:

7.03A(1a) Actual Wages – The actual wages paid will be as published by the Director of Industrial Relations of the State of California for the region where work is performed and that are in effect at the time of award of the contract. The classification of workmen used shall not be in excess of the industry standard for the region where work is performed. Copies of the published labor rates are on file at the District office.

7.03A(1b) Labor Surcharge - To the actual wages as defined in Section 7.03A(1a), will be added a labor surcharge set forth in the Special Provisions, which labor surcharge shall constitute full compensation for all payments imposed by State and Federal laws

and for all other payments made to, or on behalf of, the workmen, other than actual wages as defined in Section 7.03A(1a) and subsistence and travel allowance as specified in Section 7.03A(1c).

7.03A(1c) Subsistence and travel allowance paid to such workmen as required by collective bargaining agreements.

7.03A(2) Materials - The cost of materials incorporated in the work will be the cost to the purchaser, whether Contractor, subcontractor or other forces, from the supplier thereof, except as the following are applicable:

7.03A(2a) If a cash or trade discount by the actual supplier is offered or available to the purchaser, it shall be credited to the District notwithstanding the fact that such discount may not have been taken.

7.03A(2b) If the materials are procured by the purchaser by any method which is not a direct purchase from and a direct billing by the actual supplier to such purchaser, the cost of such materials shall be deemed to be the price paid to the actual supplier as determined by the Engineer. No markup except for actual costs incurred in the handling of such materials will be permitted.

7.03A(2c) If the materials are obtained from a supply or source owned wholly or in part by the purchaser, payment therefor will not exceed the price paid by the purchaser for similar materials furnished from said source on contract items or on the current wholesale price for such materials delivered to the job site whichever price is lower.

7.03A(2d) If the cost of such materials is, in the opinion of the Engineer, excessive, then the cost of such materials shall be deemed to be the lowest current wholesale price at which such materials are available in the quantities concerned delivered to the job site, less any discounts as provided in Section 7.03A(2a).

7.03A(2e) If the Contractor does not furnish satisfactory evidence of the cost of such materials from the actual supplier thereof, the cost shall then be determined in accordance with Section 7.03A(2d).

The District reserves the right to furnish such materials as it deems advisable, and the Contractor shall have no claims for costs and profit on such materials.

7.03A(3) Equipment Rates - The Contractor will be paid for the use of equipment at the rental rates listed for such equipment in the Special Provisions, regardless of ownership and any rental or other agreement, if such may exist, for the use of such equipment entered into by the Contractor. If it is deemed necessary by the Engineer to use equipment not listed in the Special Provisions, a suitable rental rate for such equipment will be established by the Engineer. The Contractor may furnish any cost data which might assist the Engineer in the establishment of such rental rate.

The rental rates paid as above provided shall include the cost of fuel, oil, lubrication, supplies, necessary attachments, repairs and maintenance of any kind, depreciation, storage, insurance, and all incidentals.

Operators will be paid for as provided under Section 7.03A(1).

All equipment shall, in the opinion of the Engineer, be in good working condition and suitable for the purpose for which the equipment is to be used.

Unless otherwise specified, manufacturer's ratings and manufacturer approved modifications shall be used to classify equipment for the determination of applicable rental rates. Equipment which has no direct power unit shall be powered by a unit of at least the minimum rating recommended by the manufacturer.

Individual pieces of equipment or tools having a replacement value of $25.00 or less, whether or not consumed by use, shall be considered to be small tools and no payment will be made therefor.

Rental time will not be allowed while equipment is inoperative due to breakdowns.

In computing the rental time of equipment, less than 30 minutes shall be considered ½ hour.

7.03A(3a) Equipment on the Work - The rental time to be paid for equipment on the work shall be the time the equipment is in operation on the extra work being performed, and in addition, shall include the time required to move the equipment to location of the extra work and return it to the original location or to another location requiring no more time than that required to return it to its original location, except that moving time will not be paid for if the equipment is used at the site of the extra work on other than such extra work. Loading and transporting costs will be allowed, in lieu of moving time, when the equipment is moved by means other than its own power, except that no payment will be made if the equipment is used at the site of the extra work on other than such extra work.

7.03A(3b) Equipment not on the Work - For the use of equipment moved in on the work and used exclusively for extra work paid for on a force account basis, the Contractor will be paid the rental rates listed in the Special Provisions or as agreed to as provided in Section 7.03A(3) and for the cost of transporting the equipment to the location of the work and its return to its original location, all in accordance with the following provisions:

(1) The original location of the equipment to be hauled to the location of the work shall be agreed to by the Engineer in advance.

(2) The District will pay the costs of loading and unloading such equipment.

(3) The cost of transporting equipment on low bed trailers shall not exceed the hourly rates charged by established haulers.

(4) The cost of transporting equipment shall not exceed the applicable minimum established rates of the Public Utilities Commission.

(5) The rental period shall begin at the time the equipment is unloaded at the site of the extra work, shall include each day that the equipment is at the site of the extra work, excluding Saturdays, Sundays, and legal holidays unless the extra work is performed on such days, and shall terminate at the end of the day on which the Engineer directs the Contractor to discontinue the use of such equipment. The rental time to be paid per day will be in accordance with the following:

Hours Equipment is in Operation	Hours to be Paid
0	4
0.5	4.25
1	4.5
1.5	4.75
2	5
2.5	5.25
3	5.5
3.5	5.75
4	6
4.5	6.25
5	6.5
5.5	6.75
6	7
6.5	7.25
7	7.5
7.5	7.75
8	8
Over 8	hours in operation

When hourly rates are listed, less than 30 minutes of operation shall be considered to be 1/2 hour of operation.

When daily rates are listed, payment for ½ day will be made if the equipment is not used. If the equipment is used, payment will be made for one day.

The minimum rental time to be paid for the entire rental period on an hourly basis shall not be less than 8 hours or if on a daily basis shall not be less than one day.

(6) Should the Contractor desire the return of the equipment to a location other than its original location, the District will pay the cost of transportation in accordance with the above provisions, provided such payment shall not exceed the cost of moving the equipment to the work.

(7) Payment for transporting, loading and unloading equipment, as above provided, will not be made if the equipment is used on the work in any other way than upon extra work paid for on a force account basis.

7.03B Work Performed by Special Forces or Other Special Services - When the Engineer and the Contractor, by agreement, determine that a special service or an item of extra work cannot be performed by the forces of the Contractor or those of any of his subcontractors, such service or extra work item may be performed by a specialist. Invoices for such service or item of extra work on the basis of the current market price thereof may be accepted without complete itemization of labor, material, and equipment rental costs when it is impracticable and not in accordance with the established practice of the special service industry to provide such complete itemization. In those instances wherein a Contractor is required to perform extra work necessitating a fabrication or machining process in a fabrication or machine shop facility away from the job site, the charges for that portion of the extra work performed in such facility may, by agreement, be accepted as a specialist billing.

To the specialist invoice price, less a credit to the District for any cash or trade discount offered or available, whether or not such discount may have been taken, will be added 15% in lieu of the percentages provided in Section 7.03A.

7.03C Records - The Contractor shall maintain his records in such a manner as to provide a clear distinction between the direct costs of extra work paid for on a force account basis and the costs of other operations.

The Contractor shall furnish the Engineer report sheets in duplicate of each day's extra work paid for on a force account basis no later than the working day following the performance of said work. The daily report sheets shall itemize the materials used, and shall cover the direct cost of labor and the charges for equipment rental, whether furnished by the Contractor, subcontractor, or other forces, except for charges described in Section 7.03B. The daily report sheets shall provide names or identifications and classifications of workmen, the hourly rate of pay and hours worked, and also the size, type and identification number of equipment, and hours operated.

Material charges shall be substantiated by valid copies of vendor's invoices. Such invoices shall be submitted with the daily report sheets, or if not available, they shall be submitted with subsequent daily report sheets. Should said vendor's invoices not be submitted within 15 days after acceptance of the work, the District reserves the right to establish the cost of such materials at the lowest current wholesale prices at which said materials are available in the quantities concerned delivered to the location of the work, less any discounts provided in Section 7.03A(2a).

Said daily report sheets shall be signed by the Contractor or his authorized agent.

The Engineer will compare his records with the daily report sheets furnished by the Contractor, make any necessary adjustments, and compile the costs of work paid for on a force account basis on daily extra work report forms furnished by the District. When these daily extra work reports are agreed upon and signed by both parties, they shall become the basis of payment for the work performed, but shall not preclude subsequent adjustment based on a later audit.

The Contractor's cost records pertaining to work paid for on a force account basis shall be open to inspection or audit by representatives of the District, during the life of the contract and for a period of not less than 18 months after the date of acceptance thereof, and the Contractor shall retain such records for that period. Where payment for materials or labor is based on the cost thereof to forces other than the Contractor, the Contractor expressly guarantees that the cost records of such other forces shall be open to inspection and audit by representatives of the District on the same terms and conditions as the cost records of the Contractor. If an audit is to be commenced more than 60 days after the acceptance date of the contract, the Contractor will be given a reasonable notice of the time when such audit is to begin.

7.03D Payment as provided above in Sections 7.03A and 7.03B shall constitute full compensation to the Contractor for performance of work paid for on a force account basis and no additional compensation will be allowed therefor.

7.04 ACCEPTANCE

The work shall be inspected for acceptance by the Engineer promptly upon receipt of notice in writing from the Contractor that the work is ready for such inspection.

The structures will not be finally accepted until the completion of the entire work under the contract.

7.05 DEDUCTIONS FROM PAYMENTS

The Riverside County Flood Control and Water Conservation District, by and through the Board of Supervisors or other appropriate District officer or officers, may at its option and at any time retain out of any amounts due the Contractor sums sufficient to cover any unpaid claims, provided that sworn statements of said claims shall have been filed in the office of the District or in the office of any other District officer or officers having jurisdiction thereover.

7.06 PARTIAL PAYMENTS

On or about the last day of each month, the Engineer shall make an estimate in writing of the total amount of work done by the Contractor to the time of such estimate and the value thereof. The District shall retain 5% of such estimated value of the work done as part security for the fulfillment of the contract by the Contractor. At no time shall the amount retained by the District be less than 5% of the total value of the work completed at the time such payments are made.

After deducting all previous payments and all sums to be kept or retained under the provisions of the contract, the District shall make monthly progress payments to the Contractor. No such estimate or payment shall be required to be made when, in the judgment of the Chief Engineer, the work is not proceeding in accordance with the provisions of the contract.

In accordance with Public Contract Code Section 22300 and other applicable law, the Contractor may substitute securities for any monies withheld to ensure performance under the contract. Such substitution shall be made only upon a separate agreement between the District and the Contractor which contains terms and conditions in compliance with all laws applicable to monies withheld under the contract.

7.07 DELAYED PAYMENTS

All the monies due the Contractor under the contract will be paid by demand on the Treasurer of the District, prepared and approved as required by law, and it is understood that any delay in the preparation, approval and payment of these demands will not constitute a breach of contract on the part of the District.

7.08 FINAL PAYMENT

The Engineer, after the completion of the contract, shall make a final estimate in writing to the Board of Supervisors of the amount of work done thereunder, and the value of such work, and the District shall pay the entire sum so found to be due after deducting therefrom all previous payments and all amounts to be kept and all amounts to be retained under the provisions of the contract. All prior partial estimates and payment shall be subject to correction in the final estimate and payment. The final payment shall not be due and payable until the expiration of 45 days from the date of acceptance of the work by the Board of Supervisors.

It is mutually agreed between the parties to the contract that no certificate given or payments made under the contract, except the final payment, shall be conclusive evidence of the performance of the contract, either wholly or in part against any claim of the party of the first part, and no payment shall be construed to be an acceptance of any defective work or improper materials.

And the Contractor further agrees that the payment of the final amount due under the contract, and the adjustment and payment for any work done in accordance with any alterations of the same, shall release the Riverside County Flood Control and Water Conservation District, the Board of Supervisors, and the Engineer from any and all claims or liability on account of work performed under the contract or any alteration thereof.

7.09 CLAIMS RESOLUTION - CLAIMS UP TO $375,000

In accordance with Public Contract Code Section 20104 - 20104.8 and other applicable law, public works claims of $375,000 or less which arise between the Contractor and the District shall be resolved following the statutory procedure.

1. All claims shall be submitted in writing and accompanied by substantiating documentation. Claims must be filed on or before processing of the final payment unless other notice requirements are provided in the contract. "Claim" means a separate demand by the claimant for (1) a time extension, (2) payment of money or damages arising from work done by or on behalf of the claimant and payment of which is not otherwise expressly provided for or the claimant is not otherwise entitled, or (3) an amount the payment of which is disputed by the District.

(a) Claims under $50,000. The District shall respond in writing to the claim within 45 days of receipt of the claim, or, the District may request, in writing, within 30 days of receipt of the claim, any additional documentation supporting the claim or relating to defenses or claims the District may have against the claimant. If additional information is needed thereafter, it shall be requested and provided upon mutual agreement of the District and the claimant. The

District's written response shall be submitted 15 days after receiving the additional documentation, or within the same period of time taken by the claimant to produce the additional information, whichever is greater.

(b) Claims over $50,000 but less than or equal to $375,000. The District shall respond in writing within 60 days of receipt, or, may request in writing within 30 days of receipt of the claim, any additional documents supporting the claim or relating to defenses or claims the District may have against the claimant. If additional information is needed thereafter, it shall be requested and provided pursuant to mutual agreement between the District and the claimant. The District's response shall be submitted within 30 days after receipt of the further documents, or within the same period of time taken by the claimant to produce the additional information or documents, whichever is greater.

2. If the claimant disputes the District's response, or if the District fails to respond within the statutory time period, the claimant may so notify the District within 15 days of the receipt of the District's response or within 15 days of the District's failure to respond within the time prescribed, and demand an informal conference to meet and confer for settlement of the issues in dispute. Upon such demand, the District shall schedule a meet and confer conference within 30 days for settlement of the dispute.

3. If following the meet and confer conference, the claim or any portion thereof remains in dispute, the claimant may file a claim pursuant to Government Code § 900 et seq. and Government Code § 910 et seq. For purposes of those provisions, the time within which a claim must be filed shall be tolled from the time the claimant submits the written claim until the time the claim is denied as a result of the meet and confer process, including any time utilized for the meet and confer conference.

4. If a civil action is filed to resolve any claim, the provisions of Public Contract Code § 20104.4 shall be followed, providing for nonbinding mediation and judicial arbitration.

5. Location for Filing of Claims, Jurisdiction. Any legal action related to the performance of the work or the terms of the Contract Documents shall be filed only in the Superior Court of the State of California located in Riverside, California.

7.10 CLAIMS RESOLUTION - ALL CLAIMS (PUBLIC CONTRACT CODE SECTION 9204)

This section is intended to help resolve disputes between the parties related to this project. Such disputes shall be brought to the attention of the District at the earliest possible time, so that such disputes may be promptly resolved, if possible, or other appropriate action or investigation may be promptly undertaken. Claims must be filed on or before the date of final payment as required in Public Contract Code Section 20104.2. Public works claims which arise between the Contractor and the District shall be resolved using the following procedure:

A "claim" means a separate demand by the Contractor sent by registered mail or certified mail return receipt requested for one or more of the following: (a) a time extension including, without limitation, for relief from damages or penalties for delay assessed by the District; (b) payment by the District of money or damages arising from work done by or on behalf of the

Contractor and payment for which is not otherwise expressly provided or to which the Contractor is not otherwise entitled; (c) payment of an amount that is disputed by the District. The Contractor shall furnish reasonable documentation to support the claim.

A. Form and Contents of Claim(s)

The Contractor shall furnish reasonable documentation to support the Claim, which shall be sent by registered mail or certified mail with return receipt requested to the District at the address provided herein this Section 7.10. The Contractor's written Claim must include, but not limited to, the following:

1) A statement to identify that it is a Claim under this Section 7.10, on a company letterhead, and a request for a decision on the Claim;
2) A detailed description or narrative of pertinent events, act, error, omission, unforeseen condition, event or other circumstance giving rise to the Claim;
3) Citation to contract provisions;
4) Theory of entitlement that provides a detailed justification for any remedy or relief sought by the Claim. This includes, but not limited to: a detailed cost breakdown, invoices, material tickets, staff logged time, summary of quantities, other cost records and total cost calculations;
5) Complete pricing of all cost impacts;
6) A time impact analysis of all time delays that shows actual time impact on the critical path; and
7) Documentation, District letters, notifications, related drawings and photos supporting items (1) through (6).

The Claim must be verified under penalty of perjury by Contractor's project superintendent as to the Claim's accuracy, and shall be priced like a Change Order, and must be updated at regular intervals as to cost and entitlement if a continuing Claim. Routine contract materials, for example, correspondence, RFI, Change Order requests, or payment requests shall not constitute a Claim. Contractor shall bear all costs incurred in the preparation and submission of a Claim.

Claims and support documentation related must be sent to:

Mr. Claudio M. Padres
Chief of Design and Construction Division
Riverside County Flood Control
and Water Conservation District
1995 Market Street
Riverside, CA 92501

B. Claims Procedure

1) Upon receipt of a Claim and the supporting documentation, the District shall conduct a reasonable review of the Claim and within 45 days, or an extended period as may be set by mutual agreement of the District and

Contractor, provide the Contractor with a written statement identifying what portion of the Claim is still disputed and what portion is undisputed.

2) Notwithstanding the time period set forth in B.1) above, if the District needs approval from the Board of Supervisors to provide the Contractor with a written statement identifying the disputed portion and the undisputed portion of the Claim, and the Board of Supervisors does not meet within the 45 days or within the mutually agreed to extension of time following receipt of the Claim, the District shall have up to three (3) days following the next duly publicly noticed meeting of the Board of Supervisors after the forty-five (45) day period, or extension, expires to provide Contractor a written statement identifying the disputed portion and the undisputed portion of the Claim.

3) Any payment due on the undisputed portion of the Claim under this section shall be processed and made within 60 days after the District issues its written statement. Amounts not paid in a timely manner as required by this Section 7.10 shall bear interest at 7% per annum. If the District fails to issue a written statement, the Claim shall be deemed rejected in its entirety. Failure by the District to respond to a claim from a Contractor within the time periods described in this subdivision or to otherwise meet the time requirements of this section shall result in the claim being deemed rejected in its entirety. A Claim that is denied by reason of the District's failure to have responded to the Claim, or its failure to otherwise meet the time requirements of this section, shall not constitute an adverse finding with regard to the merits of the Claim or the responsibility or qualifications of the Contractor.

4) If the Contractor disputes the District's written response, or if the District fails to respond within the time prescribed, the Contractor may demand in writing, sent by registered mail or certified mail return receipt requested, an informal meet and confer conference for settlement of the portion of the Claim in dispute. Upon receipt of the demand, the District shall schedule a meet and confer conference within 30 days.

5) Within 10 business days following the conclusion of the meet and confer conference, if the Claim or any portion thereof remains in dispute, the District shall provide the Contractor a written statement identifying the portion of the Claim that remains in dispute and the portion that is undisputed. Any payment due on an undisputed portion shall be processed and made within 60 days after the District issues its written statement. Any disputed portion of the Claim, as identified by the Contractor in writing, shall be submitted to nonbinding mediation, with the District and Contractor sharing the associated costs equally. The District and Contractor shall mutually agree to a mediator within 10 business days after the disputed portion of the Claim has been identified in writing. If the parties cannot agree upon a mediator, each party shall select a mediator and those mediators shall select a qualified neutral third party to mediate with regard

to the disputed portion of the Claim. Each party shall bear the fees and costs charged by its respective mediator in connection with the selection of the neutral mediator.

6) For purposes of this section, mediation includes any nonbinding process, including but not limited to, neutral evaluation or a dispute review board, in which an independent third party or board assists the parties in dispute with resolution through negotiation or by issuance of an evaluation. Any mediation utilized shall conform to the timeframes in this section. Unless otherwise agreed to by the District and the Contractor in writing, the mediation conducted pursuant to this Section 7.10 shall excuse any further obligation under Section 20104.4 of the Public Contract Code to mediate after litigation has been commenced.

7) If mediation is unsuccessful to resolve all issues, the parts of the Claim remaining in dispute shall be subject to applicable procedures outside of this section and the requirements of Public Contract Code § 9204. The Claim resolution procedures in this section do not preclude the District from requiring arbitration of disputes under private arbitration or the Public Works Contract Arbitration Program, if mediation under this Article does not resolve the parties' dispute.

8) Following the procedures set forth in this Section 7.10, including the mediation, if the Claim or any portion of it remains in dispute, the Contractor may file a Claim as provided in Chapter 1 (commencing with § 900) and Chapter 2 (commencing with § 910) of Part 3 of Division 3.6 of Title 1 of the Government Code.

9) If the Government Code claim is denied, Contractor may file an action in court. If a civil action is filed to resolve any claim, such action shall be subject to the provisions of Public Contract Code Sections 9204 or 20104.4 and shall be followed, providing for non-binding mediation and judicial arbitration. This section applies only to claims subject to Public Contract Code Sections 9204 or 20104. If a claim is not subject to Public Contract Code Sections 9204 or 20104, the Contractor's right to file a civil action shall be as otherwise provided by law.

C. Subcontractor Claim(s)

If a subcontractor or a lower tier subcontractor has a Claim, the Contractor may present to the District a Claim on behalf of a subcontractor or lower tier subcontractor. A subcontractor may request in writing, either on his or her own behalf or on behalf of a lower tier subcontractor, that the Contractor present a Claim for work which was performed by the subcontractor or by a lower tier subcontractor on behalf of the subcontractor. The subcontractor requesting that the Claim be presented to the District shall furnish reasonable documentation as set forth in Section 7.10 to support the Claim. Within 45 days of receipt of this written request, the Contractor shall notify the subcontractor in writing as to whether the Contractor presented the

Claim to the District, and if the Contractor did not present the Claim, provide the subcontractor with a statement of the reasons for not having done so.

D. Consistency with Public Contract Code Sections 9204 and 20104

If any Claim(s) arising under this Contract is subject to the provisions of Public Contract Code Sections 9204 or 20104 et seq. (Div. 2, Part 3, Chapter 1, Article 1.5), and if provisions of those statutory sections require a procedure or procedural element different from that established in this Contract, then the provisions of those statutory sections shall apply in place of the conflicting procedure or procedural element established herein.

E. Any legal action related to the performance of the work or the terms of the Contract Documents shall be filed only in the Superior Court of the State of California located in Riverside, California.

SECTION VIII - GENERAL

8.01 COOPERATION BETWEEN CONTRACTORS

The Contractor shall be required to cooperate fully with all utility and public agency representatives engaged in construction, relocation, altering or otherwise rearranging any facilities interfering with the progress of the work.

Full compensation for any delay or inconvenience to the Contractor's operation due to such operations as described above shall be considered included in the unit price paid for other items of work and no additional allowance will be made therefor.

8.02 INSURANCE - INDEMNIFICATION/HOLD HARMLESS/DEFEND

1. Insurance.

Contractor shall not commence work under this contract until he has obtained the insurance required hereunder and satisfactory proof of said insurance has been submitted to District and has been approved as to form by Riverside County Counsel.

Without limiting or diminishing the Contractor's obligation to indemnify, defend or hold the District harmless, Contractor shall procure and maintain or cause to be maintained, at its sole cost and expense, the following insurance coverages during the term of this Contract. In respects to the requirements for the Project and as further described in this section, the District herein refers to the Riverside County Flood Control and Water Conservation District, the County of Riverside, its Agencies, Districts, Special Districts and Departments, and any municipal corporation or governmental entity in which the work is to be accomplished, their respective directors, officers, Board of Supervisors, governing boards or councils, employees, elected and appointed officials, agents, representatives as Additional Insured.

Workers' Compensation - If the Contractor has employees as defined by the State of California, the Contractor shall maintain statutory Workers' Compensation Insurance (Coverage A) as prescribed by the laws of the State of California. Policy shall include Employers' Liability

(Coverage B) including Occupational Disease with limits not less than **$1,000,000** per person per accident. The policy shall be endorsed to waive subrogation in favor of the District and County of Riverside.

Commercial General Liability - Commercial General Liability insurance coverage, including but not limited to, premises liability, contractual liability, products and completed operations liability, personal and advertising injury, cross liability coverage, and covering claims which may arise from or out of Contractor's performance of its obligations hereunder. Policy shall name the District, all Agencies, Districts, Special Districts, and Departments of the County of Riverside, together with their respective directors, officers, Board of Supervisors, employees, elected or appointed officials, agents or representatives as Additional Insureds. Policy's limit of liability shall not be less than **$2,000,000** per occurrence combined single limit. If such insurance contains a general aggregate limit, it shall apply separately to this agreement or be no less than two (2) times the occurrence limit.

Vehicle Liability - If Contractor's vehicles or mobile equipment are used in the performance of the obligations under this Agreement, then Contractor shall maintain liability insurance for all owned, non-owned or hired vehicles so used in an amount not less than **$1,000,000** per occurrence combined single limit. If such insurance contains a general aggregate limit, it shall apply separately to this agreement or be no less than two (2) times the occurrence limit. Policy shall name the District, all Agencies, Districts, Special Districts, and Departments of the County of Riverside, together with their respective directors, officers, Board of Supervisors, employees, elected or appointed officials, agents or representatives as Additional Insureds.

Builder's Risk - Contractor shall obtain, at Contractor's expense, and keep in effect until final acceptance by the District, Builder's Risk Insurance (including earthquake and flood) covering the real and personal property of others in the care, custody, and control of the Contractor. Builder's Risk Insurance shall include theft and damage coverage. The minimum amount of coverage to be carried shall be equal to the full amount of the contract. Contractor shall be financially responsible for any deductible applied to loss. This insurance shall include the District, County of Riverside, the Contractor and its subcontractors as their interests may appear.

Professional Liability - Contractor shall maintain Professional Liability Insurance providing coverage for the Contractor's performance of work included within this Agreement, with a limit of liability of not less than $2,000,000 per occurrence and $4,000,000 annual aggregate. If Contractor's Professional Liability Insurance is written on a claims made basis rather than an occurrence basis, such insurance shall continue through the term of this Agreement and Contractor shall purchase at his sole expense either 1) an Extended Reporting Endorsement (also, known as Tail Coverage); or 2) Prior Dates Coverage from new insurer with a retroactive date back to the date of, or prior to, the inception of this Agreement; or 3) demonstrate through Certificates of Insurance that Contractor has Maintained continuous coverage with the same or original insurer. Coverage provided under items; 1), 2), or 3) will continue as long as the law allows.

Pollution and Asbestos Liability - If hazardous material is encountered during construction, the Project Manager must be notified immediately, and if any work is done to remove it, any Contractor performing work shall obtain and keep in effect during the term of their contract with Contractor, Pollution Liability Insurance, including Asbestos Liability Insurance, covering the subcontractor's liability for bodily injury, property damage, and environmental damage

resulting from "sudden accidental" or "gradual" pollution and related cleanup costs incurred by the subcontractor, all arising out of the work or services (including the transportation risk, when applicable) to be performed under this contract. Combined single limit per occurrence shall not be less than $2,000,000, or the equivalent. Annual aggregate limit shall not be less than $4,000,000.

If the Contractor maintains broader coverage and/or higher limits than the minimums shown above, the District requires and shall be entitled to the broader coverage and/or higher limits maintained by the Contractor. Any available insurance proceeds in excess of the specified minimum limits of insurance and coverage shall be available to the District.

General Insurance Provisions - All lines -

a) Any insurance carrier providing insurance coverage hereunder shall be admitted to the State of California and have an A.M. Best rating of not less than A: VIII (A:8) unless such requirements are waived, in writing, by the District Risk Manager. If the District's Risk Manager waives a requirement for a particular insurer such waiver is only valid for that specific insurer and only for one policy term.

b) The Contractor's insurance carrier(s) must declare its insurance deductibles or self-insured retentions. If such deductibles or self-insured retentions exceed $500,000 per occurrence such deductibles and/or retentions shall have the prior written consent of the District's Risk Manager before the commencement of operations under this Agreement. Upon notification of deductibles or self-insured retentions unacceptable to the District, and at the election of the District's Risk Manager, Contractor's carriers shall either, 1) reduce or eliminate such deductibles or self-insured retentions as respects this Agreement with the District, or 2) procure a bond which guarantees payment of losses and related investigations, claims administration, and defense costs and expenses.

c) Contractor shall cause Contractor's insurance carrier(s) to furnish the District with either 1) a properly executed original Certificate(s) of Insurance and certified original copies of Endorsements effecting coverage as required herein, or 2) if requested to do so orally or in writing by the District's Risk Manager, provide original certified copies of policies including all Endorsements and all attachments thereto, showing such insurance is in full force and effect. Further, said Certificate(s) and policies of insurance shall contain the covenant of the insurance carrier(s) that 30 days written notice shall be given to the District prior to any material modification, cancellation, expiration or reduction in coverage of such insurance. In the event of a material modification, cancellation, expiration, or reduction in coverage, this Agreement shall terminate forthwith, unless the District receives, prior to such effective date, another properly executed original Certificate of Insurance and original copies of endorsements or certified original policies, including all endorsements and attachments thereto evidencing coverages set forth herein and the insurance required herein is in full force and effect. Contractor ***shall not commence operations until the District has been furnished original Certificate(s) of Insurance and certified original copies of endorsements or policies of insurance including all endorsements and any and all other attachments as required in this section. An individual authorized by the insurance carrier to do so on its behalf shall sign the original endorsements for each policy and the Certificate of Insurance.***

d) It is understood and agreed to by the parties hereto and the insurance company(s), that the Certificate(s) of Insurance and policies shall so covenant and shall be

construed as primary insurance, and the District's insurance and/or deductibles and/or self-insured retentions or self-insured programs shall not be construed as contributory.

e) The District's Reserved Rights--Insurance. If, during the term of this Agreement or any extension thereof, there is a material change in the scope of services; or, there is a material change in the equipment to be used in the performance of the scope of work (such as the use of aircraft or watercraft), the District reserves the right to adjust the types of insurance required under this Agreement and the monetary limits of liability for the insurance coverages currently required herein, if, in the District's Risk Manager's reasonable judgment, the amount or type of insurance carried by the Contractor has become inadequate.

f) Contractor shall pass down the insurance obligations contained herein to all tiers of subcontractors working under this Agreement.

g) The insurance requirements contained in this Agreement may be met with a program(s) of self-insurance acceptable to the District.

h) Said insurance must contain an endorsement that District, County of Riverside, and any municipal corporation or governmental entity in which the work is to be accomplished, are named as an additional insured as respects the work covered hereunder. Said insurance must not contain, as respects the work covered hereunder, any exclusions as to bodily injury or death or property damage arising out of blasting, explosion, or underground damage to wire, pipes, conduits, mains, sewers, tank tunnels or any similar property, i.e., the so-called "x c u" exclusions. The insurance certificate evidencing such insurance must affirmatively state that the insurance carrier(s) will give District 30 days written notice prior to cancellation of the insurance or a reduction in coverage; must state that the "x c u" exclusions are waived or do not exist in the policy(s); and that District, County of Riverside, and any municipal corporation in which the work is to be accomplished, are named as an additional insured as respects the work covered hereunder.

The cost of this insurance shall be included in the prices bid for the various items of work and no additional compensation will be made therefor.

2. Indemnification - Hold Harmless and Defend.

Contractor shall indemnify and hold harmless the District, County of Riverside, and any municipal corporation or governmental entity in which the work is to be accomplished, together with its Agencies, Districts, Special Districts and Departments, their respective directors, officers, Board of Supervisors, elected and appointed officials, employees, agents and representatives (individually and collectively hereinafter referred to as Indemnitees) from any liability whatsoever, based or asserted upon any acts, omissions or services of Contractor, its officers, employees, subcontractors, agents or representatives arising out of or in any way relating to this Contract, relating to or in any way connected with or arising from the accomplishment of the work, whether or not in furtherance of the work, including but not limited to property damage, bodily injury, or death or any other element of any kind or nature whatsoever arising from the performance of Contractor, its officers, employees, subcontractors, agents or representatives Indemnitors from this Contract. Contractor shall defend, at its sole expense, all costs and fees including, but not limited, to attorney fees, cost of investigation, defense and settlements or awards, the Indemnitees in any claim or action based upon such alleged acts or omissions.

With respect to any action or claim subject to indemnification herein by Contractor, Contractor shall, at their sole cost, have the right to use counsel of their own choice and shall have

the right to adjust, settle, or compromise any such action or claim without the prior consent of the District; provided, however, that any such adjustment, settlement or compromise in no manner whatsoever limits or circumscribes Contractor's indemnification to Indemnitees as set forth herein.

Contractor's obligation hereunder shall be satisfied when Contractor has provided to District the appropriate form of dismissal relieving the Indemnitees from any liability for the action or claim involved.

The specified insurance limits required in this Agreement shall in no way limit or circumscribe Contractor's obligations to indemnify and hold harmless the Indemnitees herein from third party claims.

In the event there is conflict between this clause and California Civil Code Section 2782, this clause shall be interpreted to comply with Civil Code 2782. Such interpretation shall not relieve the Contractor from indemnifying the Indemnitees to the fullest extent allowed by law.

3. Obligations.

The obligations assumed by Contractor cover all obligations set forth in this subsection and elsewhere in the Contract Documents, such as Subsections 5.01, 5.02, 5.05, 5.06, 5.08, 5.09, 5.10, 10.01, and 10.02.

8.03 PUBLIC UTILITIES

The locations of all pipelines, power lines, communication lines and other utility components known to District to exist within the limits of the work, are indicated on the drawings and may be the subject of a specific Special Provision(s). Size, location and characteristics of such utilities is based upon information made available to District - primarily from the owner of the utility in question. The exactness of such information is not guaranteed but may be assumed to have been accomplished with reasonable accuracy.

In addition to the drawings and any such provision regarding utilities, Contractor is under a duty to take into account the location of service laterals or other appurtenances which can be inferred from the presence of facilities such as buildings, meters and junction boxes in or about the limits of the work.

Unless otherwise directed by the Contract Documents, all existing utilities - where shown or described or not - shall be left in place and Contractor must conduct its operations so that such utilities are protected from damage at all times during the course of the work and the work must be accomplished so as to give such utilities proper protection and support upon completion of the work by Contractor.

If during the course of the work, Contractor discovers underground utility components not indicated in the drawings, the Special Provisions or elsewhere in the Contract Documents, Contractor must immediately notify, in writing, the Engineer and the utility company (public or private) involved, stating with exactness the condition found.

When Contractor encounters a utility not shown or described in the Contract Documents, Contractor shall cease all work which would disturb such utility and its support until given specific instructions as to how to proceed regarding such utility by Engineer. All work done by Contractor to protect existing utilities shown or described in the Contract Documents, or which can be reasonably inferred from the presence of other visible facilities, is at Contractor's expense, the cost of which is deemed included in Contractor's Proposal to do the work.

Contractor's cost of locating, repairing damage not due to the failure of Contractor to exercise reasonable care, and removing or relocating utility components and facilities not indicated in the drawings, specifications or elsewhere in the Contract Documents with reasonable accuracy, shall be paid Contractor as Extra Work as provided in Subsection 2.08 and Subsection 7.03 of these General Provisions. Compensation for idle time of equipment shall be paid as provided in Section 8-1.07C, "Payment Adjustments", of the State Standard Specifications. No surcharge rates for equipment will be applied for idled equipment.

District may direct the Contractor to do such repair or relocation work as required. When such repair or relocation work is not elsewhere provided for in these Contract Documents, or reasonably inferred therefrom, a requirement of District that Contractor perform such work shall be compensated for as Extra Work pursuant to Subsections 2.08 and 7.03 of these General Provisions.

Contractor shall not be assessed liquidated damages for delay in completion of the project, if such delay is caused by failure of District, or the owner of the utility in question, to provide for removal or relocation of the utility involved.

8.04 PROTECTION OF EXISTING STREET FACILITIES

The Contractor shall be responsible for the protection of existing signs, fences, concrete curbs, gutters and other facilities which may be encountered. The replacement or repair of any facilities which the District deems necessary as a result of the Contractor's operations shall be done by the Contractor at his own expense and to the satisfaction of the Engineer.

Excavation within the street right of way shall be conducted in a manner to cause the least interruption to traffic. Where traffic must cross open trenches, the Contractor shall provide suitable bridges at street intersections and driveways. Hydrants under pressure, valve pipe covers, valve boxes, curb stop boxes, fire or police call boxes, or other utility controls shall be left unobstructed and accessible during construction.

8.05 DIVERSION AND CONTROL OF WATER

Unless otherwise provided in the Proposal, no separate payment will be made for diversion and control of surface or groundwater. All costs incidental to maintaining dry working areas shall be included in the unit prices paid for other items of work in the schedule.

8.06 DUST ABATEMENT

During the performance of all work included in the contract, the Contractor shall take the necessary precautions to save the District free and harmless from any loss or damage resulting

from his operations that raise or produce dust in such amounts that will be objectionable, and/or cause damage to adjacent property or property owners.

The Contractor will be required to have a positive and continuous method of dust control which is satisfactory to the Engineer. The methods to be used for controlling dust in the construction area and along haul roads shall be approved by the Engineer prior to starting any of the work included in the contract. All costs incidental to dust control shall be included in the unit prices paid for other items of work in the schedule.

8.07 PROJECT SIGNS

The Contractor shall erect project signs at the locations designated by the Engineer.

No separate payment will be made for erecting the project signs and all costs in connection therewith will be considered a subsidiary obligation of the Contractor.

8.08 EXAMINATION OF PLANS, SPECIFICATIONS, CONTRACT, AND SITE OF WORK

The bidder shall examine carefully the site of the work contemplated, the plans and specifications, and the proposal and contract forms therefor. The submission of a bid shall be conclusive evidence that the bidder has investigated and is satisfied as to the conditions to be encountered, as to the character, quality, and scope of work to be performed, the quantities of materials to be furnished, and as to the requirements of the proposal, plans, specifications, and the contract.

Where the District has made investigations of subsurface conditions in areas where work is to be performed under the contract, or in other areas, some of which may constitute possible local material sources, such investigations are made only for the purpose of study and design. Where such investigations have been made, bidders or Contractors may, upon request, inspect the records of the District as to such investigations subject to and upon the conditions hereinafter set forth. Such inspection of records may be made at the office of the District.

The records of such investigations are not a part of the contract and are shown solely for the convenience of the bidder or Contractor. It is expressly understood and agreed that the District assumes no responsibility whatsoever in respect to the sufficiency or accuracy of the investigations thus made, the records thereof, or of the interpretations set forth therein or made by the District in its use thereof and there is no warranty or guarantee, either expressed or implied, that the conditions indicated by such investigations or records thereof are representative of those existing throughout such areas, or any part thereof, or that unlooked-for developments may not occur, or that materials other than, or in proportions different from those indicated, may not be encountered.

When a log of test borings showing a record of the data obtained by the District's investigation or subsurface conditions is included with the contract plans, it is expressly understood and agreed that said log of test borings does not constitute a part of the contract, represents only the opinion of the District as to the character of the materials encountered by it in its test borings, is included in the plans only for the convenience of bidders and its use is subject to all of the conditions and limitations set forth in this Section 8.08.

No information derived from such inspection of records of investigations or compilation thereof made by the District or from the Engineer, or his assistants, will in any way relieve the bidder or Contractor from any risk or from properly fulfilling the terms of the contract.

SECTION IX - WATERING

9.01 DESCRIPTION

This work shall consist of developing a water supply for all water required for the work. The application of the water shall be under the control of the Engineer at all times and shall be applied in the amounts and at the locations approved by the Engineer.

At least one mobile unit of at least 1,000-gallon capacity for applying water shall be available on the project at all times.

Water for compacting embankment material and for laying dust shall be applied by means of pressure-type distributors or pipelines equipped with a spray system or hoses with nozzles that will ensure a uniform application of water.

No separate payment or additional allowances will be made for this work and all costs in connection therewith will be considered as included in other items in the schedule.

SECTION X - PUBLIC CONVENIENCE, TRAFFIC CONTROL AND DETOURS

10.01 GENERAL

The Contractor shall so conduct his operations as to offer the least possible obstruction and inconvenience to the public and he shall have under construction no greater length or amount of work than he can prosecute properly with due regard to the rights of the public.

Unless otherwise provided in the Special Provisions, all public traffic shall be permitted to pass through the work with as little inconvenience and delay as possible.

Spillage resulting from hauling operations along or across any public traveled way shall be removed immediately at the Contractor's expense.

Construction operations shall be conducted in such a manner as to cause as little inconvenience as possible to abutting property owners.

Convenient access to driveways, houses and buildings along the line of work shall be maintained and temporary approaches to crossings or intersecting highways shall be provided and kept in good condition.

10.02 SIGNS

It shall be the responsibility of the Contractor to provide and maintain all lights, barricades and signs, both on and off the site of work, as required by the Engineer, and all such devices shall be of a type approved by him.

If, in any case, the Engineer finds it necessary to replace, add to or erect said barricades, signs, or lights, when the Contractor fails to do so when informed, the Contractor shall be billed for all costs thereof including a daily rental fee for signs.

No separate payment, unless otherwise provided for under the Special Provisions, will be made for traffic control and detour signing and all costs incidental to these items shall be included in the unit prices paid for other items of work.

10.03 MATERIALS STORAGE

Storing or stockpiling of excavated material, imported backfill material or construction materials on any street or highway will not be permitted except as approved in writing by the Engineer.

****

SPECIAL FEDERAL PROVISIONS

SPECIAL FEDERAL PROVISIONS

SECTION 1 – SPECIAL FEDERAL PROVISIONS

1.1 Remedies - Pursuant to 2 C.F.R. Part 200, Appendix II, ¶ A the Contactor shall refer to Section VI - Prosecution and Progress, Subsection 6.09, and Section VII - Payment, Subsections 7.09 and 7.10 of the General Provisions.

1.2 Termination for Cause and Convenience - Pursuant to 2 C.F.R. Part 200, Appendix II, ¶ B the Contactor shall refer to Section V - Legal Relations and Responsibility, Subsection 5.14, and Section VI - Prosecution and Progress, Subsection 6.09 of the General Provisions.

1.3 Equal Employment Opportunity - The regulation at 41 C.F.R. Part 60-1.4(b) requires the following contract clause.

During the performance of this contract, the Contractor agrees as follows:

(1) The Contractor will not discriminate against any employee or applicant for employment because of race, color, religion, sex, sexual orientation, gender identity, or national origin. The Contractor will take affirmative action to ensure that applicants are employed, and that employees are treated during employment without regard to their race, color, religion, sex, sexual orientation, gender identity, or national origin. Such action shall include, but not be limited to the following:

Employment, upgrading, demotion, or transfer; recruitment or recruitment advertising; layoff or termination; rates of pay or other forms of compensation; and selection for training, including apprenticeship. The Contractor agrees to post in conspicuous places, available to employees and applicants for employment, notices to be provided setting forth the provisions of this nondiscrimination clause.

(2) The Contractor will, in all solicitations or advertisements for employees placed by or on behalf of the Contractor, state that all qualified applicants will receive consideration for employment without regard to race, color, religion, sex, sexual orientation, gender identity, or national origin.

(3) The Contractor will not discharge or in any other manner discriminate against any employee or applicant for employment because such employee or applicant has inquired about, discussed, or disclosed the compensation of the employee or applicant or another employee or applicant. This provision shall not apply to instances in which an employee who has access to the compensation information of other employees or applicants as a part of such employee's essential job functions discloses the compensation of such other employees or applicants to individuals who do not otherwise have access to such information, unless such disclosure is in response to a formal complaint or charge, in furtherance of an investigation, proceeding, hearing, or action, including an investigation conducted by the employer, or is consistent with the Contractor's legal duty to furnish information.

(4) The Contractor will send to each labor union or representative of workers with which he has a collective bargaining agreement or other contract or understanding, a notice to be provided advising the said labor union or workers' representatives of the Contractor's commitments under this section, and shall post copies of the notice in conspicuous places available to employees and applicants for employment.

(5) The Contractor will comply with all provisions of Executive Order 11246 of September 24, 1965, and of the rules, regulations, and relevant orders of the Secretary of Labor.

(6) The Contractor will furnish all information and reports required by Executive Order 11246 of September 24, 1965, and by rules, regulations, and orders of the Secretary of Labor, or pursuant thereto, and will permit access to his books, records, and accounts by the administering agency and the Secretary of Labor for purposes of investigation to ascertain compliance with such rules, regulations, and orders.

(7) In the event of the Contractor's noncompliance with the nondiscrimination clauses of this contract or with any of the said rules, regulations, or orders, this contract may be canceled, terminated, or suspended in whole or in part and the Contractor may be declared ineligible for further Government contracts or federally assisted construction contracts in accordance with procedures authorized in Executive Order 11246 of September 24, 1965, and such other sanctions may be imposed and remedies invoked as provided in Executive Order 11246 of September 24, 1965, or by rule, regulation, or order of the Secretary of Labor, or as otherwise provided by law.

(8) The Contractor will include the portion of the sentence immediately preceding paragraph (1) and the provisions of paragraphs (1) through (8) in every subcontract or purchase order unless exempted by rules, regulations, or orders of the Secretary of Labor issued pursuant to section 204 of Executive Order 11246 of September 24, 1965, so that such provisions will be binding upon each subcontractor or vendor. The Contractor will take such action with respect to any subcontract or purchase order as the administering agency may direct as a means of enforcing such provisions, including sanctions for noncompliance:

Provided, however, that in the event a Contractor becomes involved in, or is threatened with, litigation with a subcontractor or vendor as a result of such direction by the administering agency, the Contractor may request the United States to enter into such litigation to protect the interests of the United States.

The applicant further agrees that it will be bound by the above equal opportunity clause with respect to its own employment practices when it participates in federally assisted construction work: Provided, that if the applicant so participating is a State or local government, the above equal opportunity clause is not applicable

to any agency, instrumentality or subdivision of such government which does not participate in work on or under the contract.

The applicant agrees that it will assist and cooperate actively with the administering agency and the Secretary of Labor in obtaining the compliance of contractors and subcontractors with the equal opportunity clause and the rules, regulations, and relevant orders of the Secretary of Labor, that it will furnish the administering agency and the Secretary of Labor such information as they may require for the supervision of such compliance, and that it will otherwise assist the administering agency in the discharge of the agency's primary responsibility for securing compliance.

The applicant further agrees that it will refrain from entering into any contract or contract modification subject to Executive Order 11246 of September 24, 1965, with a Contractor debarred from, or who has not demonstrated eligibility for, Government contracts and federally assisted construction contracts pursuant to the Executive Order and will carry out such sanctions and penalties for violation of the equal opportunity clause as may be imposed upon contractors and subcontractors by the administering agency or the Secretary of Labor pursuant to Part II, Subpart D of the Executive Order. In addition, the applicant agrees that if it fails or refuses to comply with these undertakings, the administering agency may take any or all of the following actions: Cancel, terminate, or suspend in whole or in part this grant (contract, loan, insurance, guarantee); refrain from extending any further assistance to the applicant under the program with respect to which the failure or refund occurred until satisfactory assurance of future compliance has been received from such applicant; and refer the case to the Department of Justice for appropriate legal proceedings.

1.4 Contract Work Hours and Safety Standards Act - The regulation at 29 C.F.R. § 5.5(b) provides contract clause language concerning compliance with the Contract Work Hours and Safety Standards Act.

Compliance with the Contract Work Hours and Safety Standards Act.

(1) *Overtime requirements.* No Contractor or subcontractor contracting for any part of the contract work which may require or involve the employment of laborers or mechanics shall require or permit any such laborer or mechanic in any workweek in which he or she is employed on such work to work in excess of forty hours in such workweek unless such laborer or mechanic receives compensation at a rate not less than one and one-half times the basic rate of pay for all hours worked in excess of forty hours in such workweek.

(2) *Violation; liability for unpaid wages; liquidated damages.* In the event of any violation of the clause set forth in paragraph (b)(1) of this section the Contractor and any subcontractor responsible therefor shall be liable for the unpaid wages. In addition, such Contractor and subcontractor shall be liable to the United States (in

the case of work done under contract for the District of Columbia or a territory, to such District or to such territory), for liquidated damages. Such liquidated damages shall be computed with respect to each individual laborer or mechanic, including watchmen and guards, employed in violation of the clause set forth in paragraph (b)(1) of this section, in the sum of $27 for each calendar day on which such individual was required or permitted to work in excess of the standard workweek of forty hours without payment of the overtime wages required by the clause set forth in paragraph (b)(1) of this section.

(3) *Withholding for unpaid wages and liquidated damages.* The Riverside County Flood Control and Water Conservation District shall upon its own action or upon written request of an authorized representative of the Department of Labor withhold or cause to be withheld, from any moneys payable on account of work performed by the Contractor or subcontractor under any such contract or any other Federal contract with the same prime Contractor, or any other federally-assisted contract subject to the Contract Work Hours and Safety Standards Act, which is held by the same prime Contractor, such sums as may be determined to be necessary to satisfy any liabilities of such Contractor or subcontractor for unpaid wages and liquidated damages as provided in the clause set forth in paragraph (b)(2) of this section.

(4) *Subcontracts.* The Contractor or subcontractor shall insert in any subcontracts the clauses set forth in paragraph (b)(1) through (4) of this section and also a clause requiring the subcontractors to include these clauses in any lower tier subcontracts. The prime Contractor shall be responsible for compliance by any subcontractor or lower tier subcontractor with the clauses set forth in paragraphs (b)(1) through (4) of this section.

1.5 Clean Air Act and Federal Water Pollution Control Act - The Contractor shall comply with all applicable standards, orders, or regulations issued pursuant to the Clean Air Act (42 U.S.C. §§ 7401-7671q.) and the Federal Water Pollution Control Act as amended (33 U.S.C. §§ 1251-1387). Violations must be reported to FEMA and the Regional Office of the Environmental Protection Agency. See 2 C.F.R. Part 200, Appendix II, ¶ G.

Clean Air Act

1. The Contractor agrees to comply with all applicable standards, orders or regulations issued pursuant to the Clean Air Act, as amended, 42 U.S.C. § 7401 et seq.

2. The Contractor agrees to report each violation to the Riverside County Flood Control and Water Conservation District and understands and agrees that the Riverside County Flood Control and Water Conservation District will, in turn, report each violation as required to assure notification to the Federal Emergency Management Agency, and the appropriate Environmental Protection Agency Regional Office.

3. The Contractor agrees to include these requirements in each subcontract exceeding $150,000 financed in whole or in part with Federal assistance provided by FEMA.

Federal Water Pollution Control Act

1. The Contractor agrees to comply with all applicable standards, orders, or regulations issued pursuant to the Federal Water Pollution Control Act, as amended, 33 U.S.C. 1251 et seq.

2. The Contractor agrees to report each violation to the Riverside County Flood Control and Water Conservation District and understands and agrees that the Riverside County Flood Control and Water Conservation District will, in turn, report each violation as required to assure notification to the Federal Emergency Management Agency, and the appropriate Environmental Protection Agency Regional Office.

3. The Contractor agrees to include these requirements in each subcontract exceeding $150,000 financed in whole or in part with Federal assistance provided by FEMA.

1.6 Debarment and Suspension - Non-Federal entities and Contractors are subject to the debarment and suspension regulations implementing Executive Order 12549, Debarment and Suspension (1986) and Executive Order 12689, Debarment and Suspension (1989) at 2 C.F.R. Part 180 and the Department of Homeland Security's regulations at 2 C.F.R. Part 3000 (Nonprocurement Debarment and Suspension).

Suspension and Debarment

(1) This contract is a covered transaction for purposes of 2 C.F.R. pt. 180 and 2 C.F.R. pt. 3000. As such, the Contractor is required to verify that none of the Contractor's principals (defined at 2 C.F.R. § 180.995) or its affiliates (defined at 2 C.F.R. § 180.905) are excluded (defined at 2 C.F.R. § 180.940) or disqualified (defined at 2 C.F.R. § 180.935).

(2) The Contractor must comply with 2 C.F.R. pt. 180, subpart C and 2 C.F.R. pt. 3000, subpart C, and must include a requirement to comply with these regulations in any lower tier covered transaction it enters into.

(3) This certification is a material representation of fact relied upon by the Riverside County Flood Control and Water Conservation District. If it is later determined that the Contractor did not comply with 2 C.F.R. pt. 180, subpart C and 2 C.F.R. pt. 3000, subpart C, in addition to remedies available to the Riverside County Flood Control and Water Conservation District, the Federal Government may pursue available remedies, including but not limited to suspension and/or debarment.

(4) The bidder or proposer agrees to comply with the requirements of 2 C.F.R. pt. 180, subpart C and 2 C.F.R. pt. 3000, subpart C while this offer is valid and throughout

the period of any contract that may arise from this offer. The bidder or proposer further agrees to include a provision requiring such compliance in its lower tier covered transactions.

1.7 Byrd Anti-Lobbying Amendment - Contractors that apply or bid for a contract of $100,000 or more under a federal grant must file the required certification. See 2 C.F.R. Part 200, Appendix II, ¶ I; 31 U.S.C. § 1352; and 44 C.F.R. Part 18.

Byrd Anti-Lobbying Amendment, 31 U.S.C. § 1352 (as amended)

Contractors who apply or bid for an award of $100,000 or more shall file the required certification. Each tier certifies to the tier above that it will not and has not used Federal appropriated funds to pay any person or organization for influencing or attempting to influence an officer or employee of any agency, a Member of Congress, officer or employee of Congress, or an employee of a Member of Congress in connection with obtaining any Federal contract, grant, or any other award covered by 31 U.S.C. § 1352. Each tier shall also disclose any lobbying with non-Federal funds that takes place in connection with obtaining any Federal award. Such disclosures are forwarded from tier to tier up to the recipient who in turn will forward the certification(s) to the awarding agency.

Required Certification

APPENDIX A, 44 C.F.R. PART 18 - CERTIFICATION REGARDING LOBBYING
Certification for Contracts, Grants, Loans, and Cooperative Agreements

The undersigned certifies, to the best of his or her knowledge and belief, that:

1. No Federal appropriated funds have been paid or will be paid, by or on behalf of the undersigned, to any person for influencing or attempting to influence an officer or employee of an agency, a Member of Congress, an officer or employee of Congress, or an employee of a Member of Congress in connection with the awarding of any Federal contract, the making of any Federal grant, the making of any Federal loan, the entering into of any cooperative agreement, and the extension, continuation, renewal, amendment, or modification of any Federal contract, grant, loan, or cooperative agreement.

2. If any funds other than Federal appropriated funds have been paid or will be paid to any person for influencing or attempting to influence an officer or employee of any agency, a Member of Congress, an officer or employee of Congress, or an employee of a Member of Congress in connection with this Federal contract, grant, loan, or cooperative agreement, the undersigned shall complete and submit Standard Form-LLL, "Disclosure Form to Report Lobbying," in accordance with its instructions.

3. The undersigned shall require that the language of this certification be included in the award documents for all subawards at all tiers (including subcontracts,

subgrants, and contracts under grants, loans, and cooperative agreements) and that all subrecipients shall certify and disclose accordingly.

This certification is a material representation of fact upon which reliance was placed when this transaction was made or entered into. Submission of this certification is a prerequisite for making or entering into this transaction imposed by section 1352, title 31, U.S. Code. Any person who fails to file the required certification shall be subject to a civil penalty of not less than $10,000 and not more than $100,000 for each such failure.

The Contractor, _____, certifies or affirms the truthfulness and accuracy of each statement of its certification and disclosure, if any. In addition, the Contractor understands and agrees that the provisions of 31 U.S.C. Chap. 38, Administrative Remedies for False Claims and Statements, apply to this certification and disclosure, if any.

_____

Signature of Contractor's Authorized Official

_____

Name and Title of Contractor's Authorized Official

_____

Date

1.8 Procurement of Recovered Materials - The District and its Contractors must comply with Section 6002 of the Solid Waste Disposal Act, as amended by the Resource Conservation and Recovery Act. See 2 C.F.R. Part 200, Appendix II, ¶ J; and 2 C.F.R. § 200.322.

(i) In the performance of this contract, the Contractor shall make maximum use of products containing recovered materials that are EPA-designated items unless the product cannot be acquired –

- Competitively within a timeframe providing for compliance with the contract performance schedule;
- Meeting contract performance requirements; or
- At a reasonable price.

(ii) Information about this requirement, along with the list of EPA designated items, is available at EPA's Comprehensive Procurement Guidelines website, https://www.epa.gov/smm/comprehensive- procurement-guideline-cpg-program.

(iii) The Contractor also agrees to comply with all other applicable requirements of Section 6002 of the Solid Waste Disposal Act."

1.9 Access to Records - The following access to records requirements apply to this contract:

(1) The Contractor agrees to provide the Riverside County Flood Control and Water Conservation District, the FEMA Administrator, the Comptroller General of the United States, or any of their authorized representatives' access to any books, documents, papers, and records of the Contractor which are directly pertinent to this contract for the purposes of making audits, examinations, excerpts, and transcriptions.

(2) The Contractor agrees to permit any of the foregoing parties to reproduce by any means whatsoever or to copy excerpts and transcriptions as reasonably needed.

(3) The Contractor agrees to provide the FEMA Administrator or his authorized representatives' access to construction or other work sites pertaining to the work being completed under the contract.

(4) In compliance with the Disaster Recovery Act of 2018, the Riverside County Flood Control and Water Conservation District and the Contractor acknowledge and agree that no language in this contract is intended to prohibit audits or internal reviews by the FEMA Administrator or the Comptroller General of the United States.

1.10 Changes - The Contractor shall refer to Article 2 Bidding Procedures, Subsection 2.9 of the Instructions to Bidders, Section II – Scope of Work, Subsection 2.07, Subsection 2.08, and Section III – Control of the Work, Subsection 3.03 of the General Provisions.

1.11 Department of Homeland Security (DHS) Seal, Logo, and Flags - The Contractor shall not use the DHS seal(s), logos, crests, or reproductions of flags or likenesses of DHS agency officials without specific FEMA pre-approval.

1.12 Compliance with Federal Law, Regulations, and Executive Orders - This is an acknowledgement that FEMA financial assistance will be used to fund all or a portion of the contract. The Contractor will comply with all applicable Federal law, regulations, executive orders, FEMA policies, procedures, and directives.

1.13 No Obligation by Federal Government - The Federal Government is not a party to this contract and is not subject to any obligations or liabilities to the non-Federal entity, Contractor, or any other party pertaining to any matter resulting from the contract.

1.14 Program Fraud and False or Fraudulent Statements or Related Acts - The Contractor acknowledges that 31 U.S.C. Chap. 38 (Administrative Remedies for False Claims and Statements) applies to the Contractor's actions pertaining to this contract.

SPECIAL PROVISIONS

AND

DETAILED SPECIFICATIONS

SPECIAL PROVISIONS

SECTION 1 - GENERAL

1.1 Drawings and Specifications - These documents are for the construction of **Lakeland Village MDP Line H**, located in Riverside County, California. This work shall conform with the contract drawings indexed on the cover sheet of the drawings included herewith.

The Contractor shall copy any of the referenced District standard drawings from http://www.rcflood.org.

The Contractor shall be responsible to obtain referenced standard plans/drawings of various agencies from their respective office or web site.

References made in these Special Provisions or Detailed Specifications to the "Greenbook Specifications" refer to the "Greenbook" Standard Specifications for Public Works Construction, current edition, including supplements. Standard Specifications of the American Society for Testing and Materials shall be designated by ASTM and the appropriate number of the standard. Unless otherwise specified, wherever the words "Caltrans Specifications" are used in these Special Provisions or Detailed Specifications they shall mean the Standard Specifications of the State of California, Department of Transportation, current edition. Whenever the words "Caltrans Standards" are used they shall mean the Standard Plans of the State of California, Department of Transportation, current edition, unless otherwise noted.

In the event that discrepancies are encountered, the option that provides the method, item or material with the greatest strength or utility shall be chosen, as directed by the Engineer.

In case of conflict between the drawings and the specifications, the drawings shall govern; in case of conflict between the referenced specifications and these specifications, the latter shall govern.

1.2 Submittals to District - Submittals shall be sent in the form of email or postal carrier to the attention of the Engineer. The Contractor shall allow the Engineer five (5) working days from the time of receipt of the submittal (mailing time is not included) to review and respond in writing.

SECTION 2 - TIME OF COMPLETION, DAMAGES AND LEGAL HOLIDAYS

2.1 General - Following award of the contract, the Contractor shall comply with the following schedule:

STRICTLY ENFORCED SUBMITTALS TIMELINE POST AWARD

	Submittal	First Complete Submittal Deadline	District Review Timeline	Approval Deadline
Required Approvals for Unconditional Notice to Proceed (NTP)	Trench Safety System (Section 15)	Award date plus 10 working days	5 working days	Award date plus 20 working days
	Confined Space Procedures (Section 6.3)	Award date plus 10 working days	5 working days	
	OSHA Excavation Permit (Section 6.3)	Award date plus 10 working days	5 working days	
	Dust Control Plan (Section 27)	Award date plus 10 working days	5 working days	
	Stormwater Pollution Prevention Plan (Section 29.3)	Award date plus 10 working days	5 working days	
	Reinforced Concrete Pipe and Precast Reinforced Concrete Box (PRCB) (Sections 6.14 and 6.15) Layout Diagrams, Shop Drawings and PRCB Supporting Engineering Calculations (Section 31.4)	Award date plus 10 working days	5 working days	
Material Submittals	All other project material submittals, including concrete, steel, etc.	15 working days before ordering of materials	5 working days	Prior to order and delivery

The Contractor shall begin work within ten (10) calendar days after the date of receipt of Notice to Proceed from the Engineer and shall diligently prosecute the same to completion before the expiration of

FOUR HUNDRED (400) WORKING DAYS

from the date of the project's first working day identified in the Notice to Proceed and as defined in Section 2.2.

2.2 Notice to Proceed - A Notice to Proceed shall be issued no later than 20 working days after project award. The Contractor's attention is directed to Section 2.1 above. The Notice to Proceed will be issued unconditionally if all submittals are complete and accepted by the approval deadline outlined in the Section 2.1 table above. If the required submittals are not complete and accepted,

the Notice to Proceed will be issued conditionally, and construction can start only for the items with accepted submittals. Work shall not start on items lacking acceptable submittals. The District will not extend the project working days due to the Contractor's failure to secure acceptable submittals for all the items in the timeframes required in Section 2.1.

2.3 Damages - The Contractor and the District expressly agree that the cost to the District for inspection and superintendence of the work for this contract is **$1,600** per working day.

2.4 Legal Holidays - The Contractor will not be permitted to work on Legal Holidays (Reference Sections 6.02 and 6.06 of the General Provisions), except in cases of emergency as directed by the Engineer.

SECTION 3 - FORCE ACCOUNT PAYMENT

3.1 Labor Surcharge - Attention is directed to the provisions of Section VII, Article 7.03A(1b) of the General Provisions. The labor surcharge percentage to be applied to the actual wages paid as defined in Paragraph 7.03A(1a) will be twenty-four percent (24%).

3.2 Equipment Rental - Attention is directed to the provisions of Section VII, Article 7.03A(3) of the General Provisions. The equipment rental rates to be applied will be the rates published by the California Department of Transportation and in effect at the time of the award of the contract. A copy of said Equipment Rental Rates is on file at the District Office.

SECTION 4 - PROTECTION OF EXISTING UTILITIES

4.1 General - All existing underground utility lines, power poles and overhead wiring shall be protected in place at all times, except as noted otherwise on the plans. Any damage to utilities caused by the Contractor's operation shall be repaired or replaced at the Contractor's expense.

Prior to the commencement of any construction activities, the Contractor shall contact all utility companies and local municipalities servicing the project area to review as-built utility drawings and determine appropriate means of protecting utilities.

At the discretion of the Engineer, the Contractor may be required to verify, by potholing, the location of potentially affected utilities.

4.2 Cooperation with Utilities Relocated by Other - Some utilities will require relocation by others prior to or during construction as shown on the drawings and as specified in these specifications and Special Provisions.

Supplement to Section 8.01 of the General Provisions. The Contractor shall coordinate and cooperate with the various utilities or their contractors to ensure the work proceeds in an orderly manner.

The Contractor shall stage his work as required to accommodate the following utility construction or relocations:

a) AT&T - Aside from facilities that will be protected in place, there are no known conflicts with AT&T's facilities.

The Contractor shall notify AT&T in writing at least one (1) month prior to construction reaching AT&T's facilities.

Contact Person: Floyd Dizon, Consultant and Liaison to AT&T
fd8321@att.com
AT&T
3073 Adams Street, 2nd Floor
Riverside, CA 92504
714.618.9126

b) Century Link (Lumen) - Aside from facilities that will be protected in place, there are no known conflicts with Century Link's facilities.

The Contractor shall notify Century Link in writing at least one (1) month prior to construction reaching Century Link's facilities.

Contact Person: Aliyah (Al) Skaro, Business Analyst
Aliyah.Skaro@lumen.com
Lumen
Relocations Department
1025 Eldorado Boulevard
Broomfield, CO 80021
877.366.8344

c) Charter Communications - Aside from facilities that will be protected in place, there are no known conflicts with Charter Communications' facilities.

The Contractor shall notify Charter Communications in writing at least one (1) month prior to construction reaching Charter Communications' facilities.

Contact Person: Wesley Ward
wesley.ward@charter.com
Charter Communications
7337 Central Avenue
Riverside, CA 92504
951.406.1658

d) Elsinore Valley Municipal Water District (EVMWD) - The Contractor shall relocate EVMWD's waterline facilities as described in Section 30 and shown on the waterline relocation plans. Aside from these relocations, the Contractor shall protect in place any other waterlines encountered for this project.

Special attention must be made toward the protection of the 12" waterline crossing Line H and Line H1 on Sheet 13.

The Contractor shall notify EVMWD in writing at least one (1) month prior to reaching any EVMWD facilities that will be protected in place.

Contact Person: Engineering Services
inspections@evmwd.net
Elsinore Valley Municipal Water District
31315 Chaney Street
Lake Elsinore, CA 92530
951.674.3146 ext. 8402

(e) Frontier Communications - The following telephone and fiber optic lines will be relocated by Frontier Communications:

- One (1) buried fiber optic conduit crossing the catch basin serving connector pipe four (CP-4) at Station 19+92.30 on Sheet 7 and Sheet 26.
- One (1) buried copper cable crossing the Line H mainline between Station 39+45 and Station 39+66 on Sheet 13.
- Two (2) buried copper cables crossing the catch basin serving connector pipe nineteen (CP-19) at Station 11+15.16 on Sheet 18 and Sheet 28.
- One (1) buried fiber optic cable crossing the catch basin serving the end of Line H1-2 at Station 11+30.19 on Sheet 25.

The Contractor shall notify Frontier Communications in writing at least one (1) month prior to construction reaching Frontier Communications' facilities.

Contact Person: Danielle Samaniego
Danielle.samaniego@ftr.com
Frontier Communications
9 South 4th Street
Redlands, CA 92373-4738
909.748.6676

(f) Southern California Edison (SCE) - Aside from facilities that will be protected in place, there are no known conflicts with Southern California Edison's facilities.

The Contractor shall notify SCE in writing at least one (1) month prior to construction reaching SCE's facilities.

Contact Person: Jack Ray
jack.ray@sce.com
Southern California Edison
24487 Prielipp Drive
Wildomar, CA 92595
951.249.8358

(g) Southern California Gas Company (SoCal Gas) - The following gas lines will be relocated by SoCal Gas before construction:

- One (1) buried 2" gas line between Station 35+55 and Station 38+00 on Sheet 12, and Station 38+00 and Station 39+71 on Sheet 13.
- One (1) buried 2" gas line crossing the catch basin serving connector pipe fourteen (CP-14) at Station 49+22.86 on Sheet 15 and Sheet 28.
- One (1) buried 2" gas line crossing the catch basin serving connector pipe sixteen (CP-16) at Station 10+53.12 on Sheet 21 and Sheet 28.

The Contractor shall notify SoCal Gas in writing at least one (1) month prior to construction reaching SoCal Gas facilities.

Contact Person: Antonio Morales
amorales2@socalgas.com
Southern California Gas Company
1981 W. Lugonia Avenue
Redlands, CA 92374
909.335.7561

Should any utility relocation result in delays to the Contractor's work schedule, the Contractor shall be entitled only to an equivalent extension of time for the completion of the contract, and shall not be entitled to damages due to downtime and idled equipment or additional payment over and above the agreed upon contract unit prices.

SECTION 5 - PROJECT SITE MAINTENANCE

Through all phases of construction, the Contractor shall comply with the provisions of Section 3-12 of the Greenbook Specifications. Before final acceptance of the work, the Contractor shall clean the work and the site of the work of all falsework, temporary structures, other construction materials and equipment, excess materials and rubbish, weeds, trash, and shall leave the work and the site in a neat and presentable condition. Such final cleanup work shall be performed within the time specified for completion of all work.

SECTION 6 - SPECIAL REQUIREMENTS

6.1 National Pollutant Discharge Elimination System (NPDES) - The Contractor shall comply with the requirements of Board Order No. R8-2010-0033 (NPDES No. CAS618033), NPDES Area-Wide Municipal Stormwater Permit, hereafter referred to in this Section as the "Permit", issued by the California Regional Water Quality Control Board (CRWQCB) - Santa Ana Region. This Permit regulates both stormwater and non-stormwater discharges associated with Contractor's construction activities. The Contractor shall prepare and implement a Stormwater Pollution Prevention Plan (SWPPP) in accordance with Section 29 "Stormwater and Non-Stormwater Pollution Control" of the Detailed Specifications.

The Contractor's attention is directed to: 1) Section 29.2 "General Requirements" which allows the Engineer to withhold progress payments if the Contractor fails to fully implement Section 29 "Stormwater and Non-Stormwater Pollution Control" or is deemed to be in non-compliance with the provisions of the Permit; 2) Section 29.3 "PRDs Preparation and Approval" which requires that the PRDs be prepared and approved prior to the Pre-Construction meeting; and 3) Section 29.6 "SWPPP Implementation" which allows the Engineer to suspend construction operations if the Contractor fails to implement the approved SWPPP and any amendments thereto.

6.2 Sanitation - Sewage flows shall not be interrupted. Should the Contractor disrupt existing sewer facilities, sewage shall be conveyed in closed conduits and disposed of in a sanitary sewer system. If pumping is required it shall be done at the expense of the Contractor. A backup pumping system with equal capacity shall be provided at all times. Sewage shall not be permitted to flow in trenches or be covered by backfill.

6.3 Confined Space Compliance - The Contractor shall comply with all Cal/OSHA safety regulations including regulations concerning confined space and for maintaining a safe working environment for Contractor and District employees on the site. The Contractor shall develop and maintain a confined space procedure specific to this contract that complies with the requirements contained in California Code of Regulations, Title 8, Section 5158, Other Confined Space Operations and the District's Safety and Operation Manual (SOM) - Confined Space Procedures, SOM-18. A copy of SOM-18 can be obtained from the District office, 1995 Market Street, Riverside upon request.

The Contractor shall submit three (3) copies of the procedure to the Engineer for review and approval. The submittal deadline and review period shall be as specified in Section 2.1 of these Special Provisions. If revisions are required as determined by the Engineer, the Contractor shall revise and resubmit the procedure within three (3) working days of receipt of the Engineer's comments and shall allow four (4) working days for the Engineer to review the revisions. The Contractor must submit three (3) copies of the approved procedure to the Engineer prior to the pre-construction meeting.

The procedure shall provide for recording of data to develop a history of acceptable atmosphere within the confined space. That history will include:

1. Calibration schedule of a direct reading confined space meter by trained personnel.

2. Daily monitoring and recording of the confined space atmosphere with a calibrated direct reading confined space meter.

3. Records of Items 1 and 2 shall be maintained onsite and copies given to the Engineer.

4. The records shall indicate if readings are of natural or mechanically enhanced ventilation.

In addition, the procedure shall include daily tours of the job site with the Engineer to ensure inlets to the confined space are free of obstruction or substances that might affect the atmosphere of the confined space.

The Contractor will be required to keep a direct reading confined space meter onsite for the duration of the contract. The meter shall be calibrated according to the schedule specified in the Contractor's confined space procedure and shall be made available for the Engineer's use upon request.

6.4 Heavy Equipment Working Hours - Heavy construction equipment shall be allowed to work from 7:00 a.m. to 3:30 p.m. each normal working day, unless otherwise approved by the Engineer.

6.5 Encroachment Permits - Riverside County Transportation Department - The Contractor is required to obtain an encroachment permit from the Riverside County Transportation Department for work within County right of way. In addition, the Contractor shall obtain a separate road closure permit from the Riverside County Transportation Department for the pre-approved planned road closures as shown in the traffic handling drawings. The Riverside County Transportation Department will not require the Contractor to pay a fee for the encroachment permit nor the road closure permit. A copy of the encroachment permit and the road closure permit shall be provided to the Engineer prior to commencement of work.

If the Contractor desires to implement any road closures beyond the pre-approved closures shown in the contract drawings, the Contractor shall be solely responsible for obtaining the additional road closure permit. As a part of the road closure permit application, the Contractor must submit a letter of justification and traffic control plans prepared and signed by a registered Traffic Engineer or a registered Civil Engineer for the unplanned road closure(s).

6.6 Toxic Material Disposal - Toxic materials including oil, fuel oil, gasoline, coolant, fluid filters and other contaminants shall not be discharged within the project site. All such materials shall be transported offsite and legally disposed of at a County approved facility.

6.7 Survey Crew - The Contractor shall notify the Engineer in writing at least 48 hours prior to new construction staking and shall provide safe and unobstructed access to the staking area within this period. Should the staking area be inadequately prepared, unsafe, or obstructed when the District's Survey Crew arrives onsite to perform the new construction staking, the Contractor shall be subject to delay charges as defined below.

Survey Crews will be available Monday through Thursday from 7:00 a.m. to 3:30 p.m., with a half-hour off for lunch. If the Contractor requires the Survey Crew to work beyond the specified time mentioned above, it shall be considered as overtime and shall be paid by the Contractor at 1.5 times the Survey Crew's hourly rates.

The Contractor shall carefully preserve benchmarks, reference points, and stakes. In case of willful or careless destruction, the Contractor shall be charged with the resulting expense and shall be responsible for any mistakes that may be caused by their unnecessary loss or disturbance.

If the District's Survey Crew incurs delays or survey re-staking is required as a result of the Contractor's operations, the Contractor shall be charged at a rate of $250 per hour, with a minimum charge of two (2) hours for each re-staking request. Payment shall be deducted from the monthly progress payment.

6.8 Survey Monuments - The Contractor shall salvage and give to the District all survey monuments and wells removed during construction. The District will reset monuments after construction.

6.9 Job Trailer Site - The Contractor is required to provide a site and install an office trailer for District personnel. This trailer shall be in good condition and located in a place acceptable to the District. The trailer shall be for the sole use of the District and shall not be used by the Contractor for any activity, including storage. The Contractor shall make provisions for the privacy and security of the office, and provide air conditioning, drinking water, electrical service, and a private portable toilet for the Inspector. The Contractor shall also provide two office chairs and a desk suitable for reviewing plans. The Contractor shall pay the monthly billings for these services. The trailer shall be fully operational and available to District personnel on the first day of work. Should the trailer or office not be available and in working condition, it is agreed by both parties at the time of entering this contract that damages in the amount of $3,000 per month shall be assessed. It is agreed that this amount may be prorated and shall be deducted from the first contract payment and any successive payments covering any period that the facilities are unavailable.

6.10 Construction Tolerances - Variation in alignment, grade and dimensions of the structures and structural components from the established alignment, grade and dimensions shown on the drawings shall be within the tolerances specified in the following:

Table A - Tolerances for Grading Unlined Channels, Levees and Access Roads		
Departure from established alignment		2 inches on tangents 4 inches on curves
Departure from established profile grade	Channel bottoms, channel sideslopes in cut and fill, levee and access road sideslopes in cut	Zero above and 3 inches below the specified grade
	Top surfaces of levees and access roads in both cut and fill, levee and access road sideslopes in fill	Zero below and 3 inches above the specified grade

Regardless of the construction tolerances specified, the excavation and grading shall be performed so that the finished surfaces are in uniform planes with no abrupt breaks in the surface.

Table B - Tolerances for Trapezoidal Concrete Lined Channels and Levees		
Departure from established alignment		2 inches on tangents 4 inches on curves
Departure from established profile grade		1 inch
Variation in thickness of lining, sideslopes and invert		5 percent of specified thickness provided average thickness is maintained
Variation from specified width of section at any height		0.0025 times specified width W plus 1 inch. 0.0025W + 1 inch
Variation from specified height of lining		0.005 times specified height H plus 1 inch. 0.005H + 1 inch
Variation in surfaces (gradual)	Invert Sideslopes	¼ inch in 10 feet ½ inch in 10 feet
Variation in surfaces (abrupt)		¼ inch

Gradual Variation tolerance shall be measured by placing a 10-foot straightedge anywhere on the finished concrete structure within 72 hours after concrete placement. The gap at any point between the straightedge and the concrete shall not exceed the specified amount.

Table C - Tolerances for Formed, Cast-in-Place Concrete Structures		
Departure from established alignment		1 inch on tangents 2 inches on curves
Departure from established profile grade		1 inch
Inside dimensions		0.005 times specified dimension
Variation from the plumb or the specified batter in the lines and surfaces of walls, piers and in arises	Exposed, in 10 feet Backfilled, in 10 feet	½ inch 1 inch
Variation in cross-sectional dimensions		Minus ¼ inch Plus ½ inch
Variation in surfaces (gradual)	Invert Soffits, Walls, Sideslopes	¼ inch in 10 feet ½ inch in 10 feet
Variation in surfaces (abrupt)		¼ inch

Table D - Tolerances for Reinforcing Steel Placement		
Variance from indicated position	Spacing between adjacent bars and the distance between layers of bars	one bar diameter nor more than one inch
Concrete cover measured perpendicular to steel in the direction of tolerance		¼ inch

Elements not meeting these requirements shall be removed and replaced as directed by the Engineer.

6.11 Surplus Excavated Material - Any stockpiling, grading or disposal of material outside of the project limits is not covered under the District's permits and is the sole responsibility of the Contractor. Related regulatory permits that may be required include, but are not limited to, Federal Clean Water Act (Sections 401 and 404), California Fish and Game Code (Section 1602) and Federal/State Endangered Species Acts. All costs to obtain any regulatory permits related to stockpiling, grading, or disposal of material outside of the project limits shall be borne by the Contractor.

6.12 Sewer Line Inspection - Prior to the commencement of construction, the Contractor is required to video record all sewer mains (8" diameter and larger) within the project limits. Additionally, the Contractor shall video record the sewer mains after the backfilling of the storm drain has been completed. Copies of the videotapes shall be provided to the Engineer. All costs associated with this requirement shall be included in the contract price bid for Clearing and Miscellaneous Work. The Contractor is required to replace and/or repair at his own expense, any sewers damaged or misaligned as a result of his construction activities.

6.13 Storm Drain Video Inspection - All storm drains with a height or diameter of 60 inches or less shall be recorded by closed circuit television (CCTV) prior to final inspection. The recorded video and report shall be provided to the District for review. For storm drains within paved roadway, the video inspection and report shall be approved by the District prior to paving. Any additional video required to address video quality or construction deficiencies shall be completed by the Contractor at no additional expense to the District. All video inspection shall follow the RCFC Video Procedures (Appendix "D") and any re-inspection shall be, at minimum, one storm drain segment as defined in the RCFC Video Procedures.

6.14 Pipe Order Notification - The Contractor shall submit to the District the invoice from the pipe company stating, (1) pipe order date, (2) pipe quantity, and (3) estimated date of pipe delivery within five (5) calendar days of the District's approval of the pipe lay sheets and/or shop drawings. Please refer to Section 2.1 of these Special Provisions for additional submittal deadlines.

6.15 Precast Reinforced Concrete Box (PRCB) Order Notification - The Contractor shall submit to the District the invoice from the PRCB company stating (1) PRCB order date, (2) PRCB quantity, and (3) estimated date of PRCB delivery within five (5) calendar days of the District's approval of the PRCB lay sheets, shop drawings, and engineering calculations. Please refer to Section 2.1 of these Special Provisions for additional submittal deadlines.

6.16 Project Signs - Supplementing Section 8.07 of the General Provisions, the Contractor shall be required to provide two new District project signs. The Contractor shall install and maintain the project signs at locations specified by the Engineer with painting and lettering as shown in Appendix "B" of these Specifications. The signs shall be installed as directed by the Engineer within five (5) days after District issuance of the Notice to Proceed. Upon completion of construction, the signs shall be removed.

6.17 Liability Insurance - The Contractor's attention is directed to Section 8.02, Insurance - Indemnification/Hold Harmless/Defend, of the General Provisions. The Riverside County Transportation Department, Elsinore Valley Municipal Water District, and the United States of America shall also be named as additional insureds with the liability insurance coverage required to be maintained by the Contractor.

6.18 1602 Streambed Alteration Agreement Compliance - Pursuant to Section 1600 et seq. of the California Department of Fish and Wildlife (CDFW) Game Code, the CDFW issued an Operation of Law (Op Law) Letter (1600-2018-0046-R6) for this project. This agreement authorizes the impact of a total of 0.36 acre of streambed, including 0.19 acre of riparian habitat.

The Contractor must keep a copy of the Op Law onsite at all times and is required to present the Op Law to CDFW staff upon request.

The Op Law and submitted Streambed Notification Application together are provided under Appendix "E" of these Specifications.

6.19 404 Permit Compliance - Pursuant to Section 404 of the Clean Water Act, the District was issued a Nationwide Permit (SPL-2018-00245-MY). The Contractor must comply with all applicable conditions related to construction and must keep a copy of the permit onsite at all times.

The 404 Permit Conditions are included as Appendix "F" of these specifications.

6.20 401 Water Quality Certification Compliance - The Santa Ana Regional Water Quality Control Board (SARWQCB) issued a 401 Water Quality Certification (401) for the project (WDID: 332018-03). The District must comply with all conditions listed in the 401, including, but not limited to:

1. Accidental Hazardous Material Discharge - Following an accidental discharge of a reportable quantity of a hazardous material, sewage, or an unknown material, the Contractor shall immediately cease all construction or ground disturbance activity in the area of the spill and call 911 to alert the authorities and then call the Engineer. The Contractor shall not resume work in the affected area without the Engineer's approval. The District will contact the Office of Emergency Services (OES) State Warning Center and others pursuant to Water Code § 13271. The District will forward relevant information to the Contractor. [401 XIII(B)(3)(a)]

2. Violation of Water Quality Standards - The Contractor shall notify the Engineer immediately, but no later than 24 hours, after any event causing a "Violation of Compliance with Water Quality Standards." Examples of noncompliance events include: discharges causing a visible plume in waters of the State and/or flowing water coming into contact with uncured concrete. [401 XII(B)(3)(b)]

3. Substances Discharge Avoidance - The Contractor shall not use substances that could be harmful to aquatic life where they may be discharged to soils or waters of the State. These substances include, but are not limited to, petroleum lubricants

and fuels, cured and uncured cements, epoxies, paints and other protective coating materials, Portland cement concrete or asphalt concrete, and washings and cuttings thereof. All waste concrete shall be removed from the project site.

4. Motorized Equipment - The Contractor shall avoid operating or maintaining vehicular equipment within waters of the State to the maximum extent practicable except as necessary to complete the project.

5. Working and Avoidance Areas - Contractor shall confirm understanding of work areas and avoidance areas prior to the start of construction. If work/avoidance areas are unclear, Contractor shall notify District so that these areas may be delineated in the field. Work shall not disturb any areas outside of the staked work area.

The Contractor must keep a copy of the 401 Permit onsite at all times during construction and comply with all applicable conditions related to construction. The Contractor must also allow representatives from SARWQCB to inspect the authorized construction activity at any time to ensure compliance with the terms and conditions of the permit. The District will prepare and submit any reports related to the 401 Permit.

This 401 Permit is included as Appendix "G" of these Specifications.

6.21 Coordination with Tribal/Paleontological/Archaeological/Historical Monitoring - One Archeologist and two Tribal Monitors (together, the three comprise the Tribal Monitoring Team or TMT) shall be present onsite during all grading and excavation activities to monitor for the potential discovery of sensitive cultural resources. The Archeologist shall be the lead over the TMT and will also be the point of contact between the Contractor and the TMT, which is of utmost importance regarding the construction scheduling.

Note that all members of the TMT have the authority to halt construction should a potential artifact be discovered.

The Contractor is responsible for providing the construction schedule to the lead Archeologist so that the TMT is prepared and available to monitor applicable construction activities. Any changes to the schedule must be provided to the lead Archeologist with a minimum of 48-hour notice. Failure to provide the minimum 48-hour notice may result in a penalty to cover the cost of the monitors arriving without cause; in addition, the Contractor will not be able to work should the TMT not be present due to Contractor not providing the required notice.

The District will coordinate a worker environmental awareness training to educate onsite personnel on how to identify potential environmental and cultural issues that may come up during construction and to explain the protocol on handling environmental issues that may arise during construction. Contractor and staff shall attend the pre-construction environmental awareness training.

If potential findings are uncovered during excavation activity, the Contractor's attention is directed to Section 6.22 - Accidental Cultural Resources Discovery and Section 6.23 - Accidental Paleontological Discovery.

6.22 Accidental Cultural Resources Discovery - In the event that any historical, tribal, or archaeological resources are accidentally discovered within the project limits, the Archaeologist and Tribal Monitors have the authority to immediately halt all excavation activities in the location of the find. The Contractor shall comply with the following procedures:

1. Immediately halt all earthmoving activities in the immediate vicinity of the discovery to allow the Archaeologist and Tribal Monitors to assess the significance of the discovery.

2. At the direction of the District Engineer in consultation with the Consulting Tribes, Contractor and all construction personnel and their managers shall implement appropriate protective measures for the discovery and prohibit project ground disturbing activities within 100 feet of the find.

3. Construction activities may resume near the find only after receiving approval from the District Engineer.

4. Per State Health and Safety Code 7050.5, if human remains are encountered during construction, no further disturbance shall occur until the Riverside County Coroner has made a determination of origin and disposition pursuant to Public Resources Code Section 5097.98.

Should any of the above-mentioned discoveries result in delays to the Contractor's work schedule, the Contractor shall be entitled only to an equivalent extension of time for the completion of the contract and shall not be entitled to damages due to downtime and idle equipment or additional payments over and above the agreed upon contract prices.

6.23 Accidental Paleontological Discovery - In the event that paleontological resources are accidentally discovered within project limits, the Contractor shall immediately cease all construction or ground disturbance activity in the vicinity of find and notify the Engineer. District will provide the appropriate professional to assess the significance of the discovery and, if necessary, develop appropriate management and treatment measures. **The Contractor shall not resume construction in the affected area without the Engineer's approval.**

Should a paleontological resource discovery result in delays to the Contractor's work schedule, the Contractor shall be entitled only to an equivalent extension of time for the completion of the contract and shall not be entitled to damages due to downtime and idle equipment or additional payments over and above the agreed upon prices.

6.24 Burrowing Owl Pre-Construction Survey - In compliance with CEQA and the MSHCP, the District must conduct a presence/absence survey for Burrowing Owl no more than 30 days prior to construction/disturbance. The Contractor shall not commence any work onsite, including

equipment staging, clearing, grubbing, etc., until the District determines that Burrowing Owl is absent from the project site or that an avoidance plan has been initiated should Burrowing Owl be detected onsite. If the Contractor does not commence construction within 30 days of said determination, the Contractor must notify the Engineer that another pre-construction survey is needed.

6.25 Burrowing Owl Avoidance Measures - If Burrowing Owl is confirmed present onsite, the District will establish an avoidance buffer of up to 500 feet around occupied burrows or nests. Encroachment shall not be allowed within the established avoidance buffer until it has been determined by the District that the burrow/nest is no longer active or until otherwise safe to do so. **The Contractor shall not resume work in the affected area without the Engineer's approval.**

Should compliance with this requirement result in delays to the Contractor's work schedule, the Contractor shall be entitled only to an equivalent extension of time for the completion of the contract, and shall not be entitled to damages due to downtime and idle equipment or additional payments over and above the agreed upon prices.

6.26 Nesting Bird Pre-Construction Survey (except Burrowing Owl) - A nesting bird pre-construction survey will be required if work commences during the nesting season of February 1st through August 31st. If work commences within the nesting season, the District biologist will conduct a protocol nesting bird survey. If active nests are identified, the District biologist shall implement and monitor specific avoidance and minimization measures, such as avoiding construction near active nests. If nesting birds are present, the Contractor will not be allowed to work within specific areas (up to 500 feet) as determined by the District biologist. **The Contractor shall not resume construction in the affected area without Engineer's approval.** If the Contractor does not initiate construction within 72 hours of Engineer's approval, the Contractor must notify the Engineer that another nesting bird survey is needed.

Should the presence of nesting birds result in delays to the Contractor's work schedule, the Contractor shall be entitled only to an equivalent extension of time for the completion of the contract, and shall not be entitled to damages due to downtime and idle equipment or additional payments over and above the agreed upon prices.

6.27 Maiden Lane Fire Station Coordination - The Contractor is required to coordinate with the Fire Department to accommodate access for emergency vehicles to and from Riverside County Fire Department Station 11 located at 33020 Maiden Lane when construction is in the nearby vicinity. The business phone number for this fire station is 951.678.2161.

SECTION 7 - SOILS REPORT

In conjunction with the soils investigation report prepared by GeoTek, Inc. dated March 9, 2018, the Contractor's attention is directed to Article 8.08 of the General Provisions. The logs of the soil borings for this report are included for the convenience of the bidders, in conformance with Section 8.08 of the General Provisions, as Appendix "C" of these specifications. The soils report is on file in the District office, 1995 Market Street, Riverside and is available for review

upon request or can be downloaded from https://content.rcflood.org/documents/Soils-Report-300002001.pdf.

SECTION 8 - NOT USED

SECTION 9 - PAYMENT

The contract prices shall include full compensation for all costs incurred under these Special Provisions and Detailed Specifications.

****

DETAILED SPECIFICATIONS

SECTION 10 - MOBILIZATION

10.1 Description - The contract item Mobilization shall consist of expenditures for all preparatory work and operations, including but not limited to, those costs necessary for the movement of personnel, equipment, supplies and incidentals to the project site; for the establishment of all offices, buildings, construction yards and other facilities necessary for work on the project; and for all other work and operations which must be performed or costs incurred prior to beginning work on the various contract items on the project site as well as the related demobilization costs anticipated at the completion of the project.

10.2 Payment - The amount credited for Mobilization on each monthly progress payment shall be equal to the total of the amounts credited for work on all the other contract items for that monthly progress payment, up to a cumulative limit of eighty percent (80%) of the lump sum price bid for Mobilization. The remaining twenty percent (20%) of the lump sum price bid for Mobilization will be paid with the final payment.

Payment of the lump sum contract price for Mobilization shall constitute full compensation for all labor, materials, equipment, and all other items necessary and incidental to completion of this item of work.

The deletion of work or the addition of extra work as provided for herein shall not affect the price paid for Mobilization.

SECTION 11 - WATER CONTROL

11.1 Description - This section covers the contract item Water Control. Watersheds and/or urban runoff areas are tributary to the project site at various locations, but do not necessarily follow the alignment of the project under current conditions. Surface water and flow within the proposed project site in varying quantities can be expected at any time of the year, and substantial runoff can be expected during periods of rainfall. Groundwater was not indicated at the time of the soils investigation for this project. All bidders shall make their own determination regarding what the surface and/or groundwater conditions will be at the time of construction, and their impact on the bidder's operations and construction phasing.

11.2 Water Control - The contract item Water Control includes the control and/or diversion of surface runoff as well as groundwater within the work area as required to complete the work. All work shall be carried on in areas free of water and must not be performed during periods of forecasted rain. Care should be exercised so that runoff, ponding or diversion flows do not erode, undermine or otherwise damage or degrade the constructed facilities, adjacent private properties or alter the suitability of the site for the proposed work. The responsibility for the protection of all existing and proposed improvements lies with the Contractor.

11.3 Measurement and Payment - The methods of controlling both surface and groundwater will be the responsibility of the Contractor. The contract lump sum price paid for Water Control shall

include full compensation for all direct and indirect costs incurred under this section, and for doing all the work involved in controlling surface runoff and groundwater within the construction area, as specified in these Detailed Specifications, and as directed by the Engineer.

Payment will be made on a basis of the percentage of the work completed on the entire project.

SECTION 12 - TRAFFIC CONTROL

12.1 Description - The contract item Traffic Control covers all costs associated with complying with the requirements as set forth in this section and as shown on the drawings.

12.2 Notification of Agencies - The Contractor shall notify the following agencies a minimum of 48 hours in advance of start of any street work and inform them of the proposed construction schedule and provide any additional pertinent information they may request:

AT&T (Floyd Dizon)	714.618.9126
Century Link (Lumen) (Aliyah (Al) Skaro)	877.366.8344
Charter Communications (Wesley Ward)	951.406.1658
Elsinore Valley Municipal Water District, Engineering Services	951.674.3146 x8402
Frontier Communications (Danielle Samaniego)	909.748.6676
Lake Elsinore Unified School District	951.253.7000
Public Transit	951.565.5000
Riverside County Fire Department, Station 11	951.678.2161
Riverside County Sheriff's Department (Lake Elsinore Station)	951.245.3300
Riverside County Transportation Department	951.955.6880
Riverside County Transportation Department (Construction Inspections)	951.955.6885
Riverside County Transportation Department (Encroachment Permits)	951.955.6790
Riverside County Transportation Department (Traffic Operations)	951.955.6800
Southern California Edison (Jack Ray)	951.249.8358
Southern California Gas Company (Antonio Morales)	909.335.7561
Underground Service Alert	800.227.2600
United States Postal Service	951.674.9726
Waste Disposal Service	951.486.3200

The Contractor is not relieved of his responsibility of notifying the various departments and agencies mentioned above, even if their telephone numbers may have changed without notice.

The above agencies shall also be advised by the Contractor of any major change in the construction schedule that could restrict pedestrian or vehicular traffic.

The Contractor shall notify the public a minimum of ten (10) working days prior to start of road closure. The Contractor is also required to notify, in writing, the following as applicable: Fire Department, Sheriff, California Highway Patrol, local newspaper, trash pickup, school districts, Riverside Transit Agency, Post Master, UPS, colleges, local businesses, local residents, and state and local agencies involved, if affected.

12.3 Public Convenience and Access - The Contractor shall comply with the requirements of Section X of the General Provisions and shall provide continuous access to all private property. Additional provisions shall be made as necessary to protect the public and accommodate vehicular and pedestrian traffic with a minimum of inconvenience.

Closures or partial closures of the traveled way implemented by the Contractor shall be related to actual work being performed at the time. Closures shall not be maintained if work is not being performed. If the existing closure is not essential to the type of work being performed at the time, the traveled way shall immediately be restored to a safe condition for public use.

The Contractor shall provide temporary bridge crossings for all driveway entrances to be closed to vehicular access for any period exceeding 4 hours.

Temporary bridges shall have a minimum width of 12 feet for residential driveways and 24 feet for business driveways, and shall be designed for an AASHTO H20 truck loading. Steel plates placed over the trench shall have a minimum thickness of 1.25" and the surface shall be roughened or coated to provide a non-skid surface. For spans greater than 4 feet, a structural design shall be prepared by a Registered Civil Engineer and submitted to the District for review and approval.

The Contractor shall notify each resident in writing three (3) days in advance of working adjacent to resident's property or excavating past the affected driveway entrance. Such notice shall contain the expected day and period of time (not to exceed 4 hours) that the driveway is to be out of service and the expected duration of construction when working adjacent to resident's property. A copy of each letter shall be submitted to the Engineer.

12.4 Traffic Control and Construction Signs - The Contractor bears full responsibility to identify, implement, and maintain all traffic controls, including, but not limited to, labor, flagmen, lights, barricades, signs, materials, temporary bridges and equipment, and any other measures necessary to ensure the safety of vehicular and pedestrian traffic through and around their work areas. The drawings include Traffic Handling Plans that indicate an approved concept of lane/road closures, detours, and minimum signage, however, the Contractor is responsible for identifying, implementing, and maintaining additional or alternative traffic controls wherever necessary to ensure vehicular and pedestrian safety, and where directed by the Engineer. Such additional or alternative traffic controls must provide at least equivalent signage and comport with the standard notes identified on the Traffic Handling Plans. All traffic controls, construction signs, barricades, delineators, etc. shall conform with the U.S. Department of Transportation, Federal Highway Administration, "Manual on Uniform Traffic Control Devices for Streets and Highways (MUTCD), Part 6, latest edition", and the MUTCD California Supplement, Part 6 along with the California MUTCD Sign Charts.

The County of Riverside Transportation Department may require that the Contractor prepare and submit Traffic Control Plans as part of their encroachment permit. Such plans must be prepared by the Contractor or their licensed engineer as required and must not include nor rely upon the signatures included on the traffic handling plans included in the drawings.

12.5 Flaggers - All personnel utilized as flaggers must be trained in the proper fundamentals of flagging and signaling per the latest standard Work Area Traffic Control Handbook (WATCH) procedures.

12.6 Striping and Pavement Marking - Temporary and permanent striping shall be performed by the Contractor at his expense as directed by the Engineer. The Contractor shall restore the permanent striping immediately after resurfacing of the streets is completed. The Contractor shall notify the Riverside County Transportation Department, Telephone: 951.955.6800 at least 48 hours prior to restriping.

All temporary traffic striping and pavement markings shall conform to Section 84 of the Caltrans Specifications and shall be acceptable to the Riverside County Transportation Department.

All new or replaced permanent pavement markings such as arrows, "STOP", "ONLY", reflectors, etc., shall be replaced by the Contractor using thermoplastic. Thermoplastic crosswalk, traffic stripes and pavement markings shall conform to the provisions in Section 84-1, "General" and 84-2, "Traffic Stripes and Pavement Markings" of the Caltrans Specifications and these Detailed Specifications.

12.7 Payment - The contract prices paid for Traffic Control shall include full compensation for all material and labor costs incurred under this section. Contractor is advised that traffic plans as shown on the drawings may be modified as field conditions require. No additional payment shall be made for modifications to the traffic plan.

Included in the contract item is the traffic handling for the Maiden Lane EVMWD Waterline Relocations.

Exclusive of this contract item is the Traffic Control work related to EVMWD other waterline relocations, which is included in the lump sum item "EVMWD Waterline Relocations" further detailed in Section 30 of these Detailed Specifications.

This payment will be made on a basis of the percentage of work completed on the entire project.

SECTION 13 - CLEARING AND MISCELLANEOUS WORK

13.1 Description - This section covers the contract item Clearing and Miscellaneous Work as required for construction of the work. All objectionable materials shall be removed and legally disposed of outside of the limits of the construction easements and permanent rights of way.

13.2 Clearing and Miscellaneous Work - The contract item Clearing and Miscellaneous Work includes the removal and legal disposal of all vegetation, trees, roots, stumps, fences, block walls, pipes, all abandoned facilities, culverts, rocks, structures, curbs, gutters, cross gutters, sidewalk,

concrete and asphalt excluding those items defined specifically as excavation in the appropriate sections.

Included in this item are the following:

1. The Contractor shall leave all improved parkways undisturbed where possible. When this is impractical, the Contractor shall returf in kind areas disturbed in the parkways, including removing and replacing interfering portions of sprinkler systems and front garden features. Sod shall be used to restore disturbed grass. All work is to be done to the satisfaction of the Engineer. If irrigation lines are severed, the lines must either be immediately repaired, or if repairs will be deferred while interfering work is completed, the property owner must be immediately notified to make appropriate adjustments to irrigation timers to minimize potential damage due to irrigation flows. Repairs shall be tested in coordination with the property owner.

2. The protection and/or temporary relocation of signs and mailboxes, and their reinstallation. Work involving mailboxes shall be coordinated with the Postal Service.

3. The stenciling and signage on top of all catch basins and drop inlets. Stenciling and signage will be provided by the District.

4. The removal and replacement of fences as shown on the drawings.

5. The removal and relocation of interfering water meters, water valves and fire hydrants as shown on the drawings.

6. The protection in place of an existing concrete slurry encasement containing conduits and crossing the storm drain alignment on Grand Avenue at Station 18+72.00 on Sheet 7.

7. The removal and legal disposal of the existing concrete pad on the sediment basin property.

8. The removal and plugging of an abandoned 1" steel pipe that may be encountered during storm drain construction on Maiden Lane between Cottrell Boulevard and the Sediment Basin.

9. The protection and temporary support of historic streetlamps in place.

10. Any miscellaneous fill outside of the Standard Drawing M815 trench limits required to achieve the typical sections and proposed finished surfaces above and around these structures as shown on the project drawings.

Finally, included in this item are those types of work as shown on the project drawings or specified in the contract documents not specified for pay under any other individual contract item.

13.3 Payment - The contract price paid for Clearing and Miscellaneous Work shall be full compensation for all costs incurred under this section.

This payment will be made on a basis of the percentage of work completed on the entire project.

SECTION 14 - EARTHWORK

14.1 Description - This section covers the contract items Excavation; Precompaction; Basin, Inlet and Outlet Excavation; Rock Excavation; Street Pavement Excavation; Maiden Lane Roadway Excavation; Backfill; Embankment; Controlled Low Strength Material (CLSM); and Filter Material.

14.2 General Excavation Requirements - Open Trench Excavation shall be in conformance with Section 306 of the Greenbook Specifications. Basin, Inlet and Outlet Excavation shall be in conformance with Section 300-6 of the Greenbook Specifications. Trench access ladders shall be in conformance with Section 306-3.6 and the manner of shoring and bracing shall be in conformance with Section 306-4 of the Greenbook Specifications.

Excavation shall be kept to the minimum widths required for efficient placing of the structure and the construction of the project as shown on the project drawings. The maximum length of open trench shall be in conformance with Section 306-3.5 of the Greenbook Specifications.

In excavating for surfaces against which concrete is to be placed, care shall be exercised in removing the final lift. The foundation for all structures including pipe, box, manholes, junctions, levees and other embankments, concrete access ramps, channels and sideslopes will be inspected and tested after excavation. No structures, fill or backfill will be permitted until the foundation has been inspected and approved by the Engineer. Work completed without inspection of the foundation may, at the discretion of the Engineer, be required to be removed and replaced at the sole cost of the Contractor. The subgrade shall be ninety percent (90%) relative compaction prior to the placement of concrete. Surfaces against which concrete is to be placed shall be free of debris, mud or ponded water. If subgrade compaction is deficient, subgrade shall be scarified, moisture conditioned to or slightly above optimum moisture content, and the surface proof rolled to a minimum ninety percent (90%) relative compaction. Subgrade preparation will not be measured or paid separately and no additional compensation will be allowed unless overexcavation is directed by Engineer.

Material which will not provide a suitable foundation shall be removed and replaced with compacted select material as directed by the Engineer.

Any overexcavation shall be filled with select material compacted to ninety percent (90%) relative compaction and meeting the material requirements for backfill.

The Contractor shall remove slides and materials eroding into the work, and the slopes and grades refinished to original grades as specified.

The Contractor shall legally dispose of all surplus excavated material outside of the limits of the construction easements and permanent rights of way.

The removal of rock material from within the excavation paylines which requires the use of blasting or equipment beyond that normally necessary to accomplish the excavation (as determined by the Engineer) shall be in accordance with Section 14.6 of these Detailed Specifications.

Blasting, when necessary, as approved by the Engineer shall be in accordance with Section 19-2.03E of the Caltrans Specifications. Any material outside the authorized cross section which may be shattered or loosened because of blasting shall be removed by the Contractor at the Contractor's expense. Further, velocity monitoring during the blasting operation should be performed by the Contractor.

Prior to any blasting, a blasting plan developed by a qualified blasting engineer shall be submitted to the Engineer for approval. The Contractor is responsible for obtaining all necessary permits associated with blasting from local and state authorities. The cost of permits will be paid for under the contract item Rock Excavation, and no additional compensation will be allowed.

The following information should also be included with the blasting plan submitted to the Engineer for review and approval.

- All appropriate permits from local and state authorities.
- Certification of the Contractor's Blaster, which should meet the qualifications of the California State Regulations.
- Experience level of the Contractor's Blaster.
- Anticipated size of rocks from blasting. Consideration should be given to the project needs such as riprap and crushed rock base. Blasting should be planned such that the size of rocks will meet the gradation and size requirement of the project.
- Statements about storage and method of deliveries of explosives, etc., which are in accordance and approved by the regulating authorities.
- The blasting time authorized by appropriate local authorities.
- Planning and procedures for small "test(s)" blasts to confirm blast design.

The Contractor's attention is directed to the General Provisions, Section V, Article 5.09 on the use of explosives and Article 5.11 in regard to unforeseen difficulties.

14.3 Excavation - The contract item Excavation covers all costs associated with the excavation necessary for the construction and installation of the reinforced concrete box and pipe, and the associated junction structures, headwalls, manholes, transitions, collars and bulkheads as shown on the project drawings, standard drawings and as directed by the Engineer. Included in this item

is the sawcutting (where necessary), removal and disposal of all surplus excavated material including asphalt, aggregate base, abandoned pipelines and concrete from within the excavation paylines as specified and as required. All surplus material and items not suitable for use as backfill shall be legally disposed of outside the limits of the construction easements, temporary and permanent rights of way. All HMA and P.C.C. shall be sawcut unless otherwise specified.

14.4 Precompaction - The contract item Precompaction consists of the compaction of the foundation after the foundation overexcavation has been completed and before any embankment is placed. The exposed foundation shall be moisture conditioned to or slightly above (to three percent (3%) above) optimum moisture content, brought to a uniform grade and the top six inches shall be precompacted to not less than ninety-five percent (95%) relative compaction when measured in conformance with California Test Method 216.

14.5 Basin, Inlet and Outlet Excavation - The contract item Basin, Inlet and Outlet Excavation covers all excavation and fill required to obtain the sediment basin, Lines H, H1 and H2 inlets, Line H outlet, their access ramps, access roads and rock slope protection cross sections within the paylines as shown on the project drawings and as described below:

- Sediment basin and its access ramp, access road and low flow trench (Sheet 36)
- Line H inlet and its emergency spillway, turnaround, rock slope protection and access ramp (Sheet 42)
- Line H1 inlet and its rock slope protection and access ramps (Sheet 45)
- Line H2 inlet and its emergency spillway, turnaround, rock slope protection and access ramp (Sheet 48)
- Line H outlet and its access road and ramp, rock slope protection and impact basin

All excess material not used for the construction of the project shall be hauled offsite and legally disposed of away from the site.

Before placing any fill the subgrade shall be cleared of all vegetation and debris. All fill material placed shall be moistened and shall be free from sod, roots, brush, debris, trash and other objectionable material and shall be placed in horizontal layers not over 8 inches in depth before being compacted to ninety percent (90%) relative density.

14.6 Rock Excavation - The contract item Rock Excavation shall include any material which in the opinion of the Engineer cannot be excavated with conventional excavating equipment, such as a 235C Caterpillar excavator with a medium stick and rock-ripping bucket, and is removed by drilling and blasting, or mechanically fracturing by means other than conventional excavation equipment and occupies an original volume of at least one-half cubic yard. The rock or large boulders determined to be Rock Excavation may be reduced for removal by blasting or mechanical means. If Rock Excavation is encountered, the Engineer may change the slopes or the depth of the subgrade. When rock is encountered, it shall be stripped of earth and the Engineer's representative notified and given proper time to observe the rock before removal. Any rock removed which has not been measured by the Engineer's representative will not be classified as Rock Excavation. Excavation in excess of the depth required for the structures shall be corrected by placing filter material, at no additional expense to the Engineer. Should the Contractor exhaust

conventional equipment and methods for Rock Excavation and removal and desire to use explosives, it shall comply with Section 14.2 General Excavation Requirements and the following:

1. Blasting, storage and handling of explosives shall be in accordance with the Construction Safety Orders of the Division of Industrial Safety of the California Department of Industrial Relations, Federal Safety Requirement and other authorities which have jurisdiction.

2. Blasting shall be done only by skilled operators under the direction of a licensed Contractor's Blaster. Certification of the Contractor's Blaster should meet the qualifications of the California State Regulations.

3. The Contractor shall identify all property and structures which may be affected by blasting and shall take all safety precautions and protective measures to prevent damage or injury. All personal injury or damage to persons or property of any nature shall be the responsibility of the Contractor.

4. The Contractor agrees to indemnify and hold the Engineer, its officers, agents and employees harmless from any and all liability claims, costs and expenses. For project site subsurface conditions, please refer to the Soils Report.

Evidence of possible large boulders at depths varying from 4 to 15 feet below the existing ground surface were found at seven tested locations. Refer to Appendix "C" Soils Report for further information.

14.7 Street Pavement Excavation - The contract item Street Pavement Excavation covers removal of all materials, including soil, asphalt concrete pavement, aggregate base, abandoned pipelines, and concrete as required to construct the full HMA and aggregate base pavement sections, to depth and dimension of the new pavement as specified and as shown on the project drawings.

The top six inches (6") of subgrade shall also be compacted to 95% relative compaction prior to constructing the full HMA and aggregate base pavement sections. Payment for all earthwork and preparation necessary to accomplish the specified compaction will also be included in this item of work.

Included in the contract item is the legal disposal of all surplus material.

Exclusive of this contract item is the street pavement excavation within the trench excavation limits, which is included in the contract item Excavation.

Exclusive of this contract item is the roadway excavation on the existing unpaved portion of Maiden Lane outside of the trench limits, which is included in the contract item Maiden Lane Roadway Excavation.

All HMA and P.C.C. shall be saw cut unless otherwise specified.

14.8 Maiden Lane Roadway Excavation - The contract item Maiden Lane Roadway Excavation covers removal of soil and other materials if present, including asphalt, aggregate base, abandoned pipelines, and concrete as required to construct the full HMA and aggregate base pavement sections, to depth and dimension on the existing unpaved portion of Maiden Lane between Cottrell Boulevard and the proposed sediment basin as specified and as shown on Sheets 55 through 57 of the project drawings.

The top six inches (6") of subgrade shall also be compacted to 95% relative compaction prior to constructing the full HMA and aggregate base pavement sections. Payment for all earthwork and preparation necessary to accomplish the specified compaction will also be included in this item of work.

Included in the contract item is the legal disposal of all surplus material.

Exclusive of this contract item is the excavation within the trench excavation limits, which is included in the contract item Excavation.

14.9 General Backfill Requirements - Whenever fill is specified or required (except for pipe and box backfill, or where otherwise specified herein) the work shall be performed as set forth in Sections 300-4.1 to 300-4.8 of the Greenbook Specifications. Backfill for pipe and box shall conform to Section 306-12 of the Greenbook Specifications, except jetting is not allowed.

All fill material placed shall be moistened and shall be free of sod, roots, brush, debris, trash and other objectionable material.

No backfill materials shall be placed against the outside walls of cast-in-place concrete structures until the concrete has developed eighty percent (80%) of its design strength. No fill or traffic will be permitted on the top of any cast-in-place concrete structure until the concrete in the structure has attained its design strength. Compressive strength will be determined by test cylinders taken by the Engineer. A maximum of six (6) test cylinders per structure will be made and paid by the District for the following day breaks: 7, 14, 21, 28 (x2) days – two cylinder breaks at 28 days to report the average as requested by ACI certification, and one break to be agreed upon by the Engineer and Contractor. Any additional test cylinders requested by Contractor shall be deducted from the monthly progress payment at a rate of $500.00/cylinder.

Regardless of the method of densification, backfill material shall not be placed against any reinforced concrete structure until the structure has been inspected and approved for backfilling by the Engineer.

Backfill will be accomplished by either mechanical methods or by placement of Controlled Low Strength Material (CLSM) as described in (1) and (2) below.

(1) Mechanical Compaction - Backfill shall be mechanically compacted by means of tamping rollers or other mechanical tampers. Impact-type pavement breakers (stompers) will not be permitted unless otherwise approved by the Engineer.

All backfill material for structures shall be placed in uniform layers and shall be brought up uniformly on each side of the structure. The thickness of each layer of backfill shall not exceed 8 inches before compaction unless otherwise approved by the Engineer. For hand directed mechanical compactors, the thickness of each layer shall not exceed 4 inches before compaction.

All relative compaction tests will be made by the Engineer in conformance with ASTM D1557. Whenever relative compaction is specified to be determined by ASTM D1557.

(2) Controlled Low Strength Material (CLSM) - Controlled Low Strength Material (CLSM) placement for backfill shall be used when specified or approved by the Engineer. CLSM shall conform to Section 201-6 of the Greenbook Specifications and as specified in Section 16.

Approval to use specific methods and compaction equipment shall not be construed as guaranteeing or implying that the use of such methods and equipment will not result in damage to adjacent ground, existing improvements or improvements installed under the contract, nor shall it be construed as guaranteeing proper compaction. The Contractor shall make his own determination in this regard.

All backfill around structures and pipe shall be compacted to not less than ninety percent (90%) relative compaction. Where such material is placed under existing or proposed paved roadways, the top three (3) feet, measured from the subgrade plane, shall be compacted to ninety-five percent (95%) and shall be compacted by Method (1).

Trench bottoms for structures and pipe shall be graded to provide firm and uniform bearing throughout the entire length of the structures and pipe.

14.10 Testing - District personnel shall perform compaction tests as described below using either the ASTM D1556 (sand cone) or ASTM D6938 (nuclear) test method. These tests represent the minimum required. Additional tests may be taken at the Engineer's discretion.

1. Mainline Trenches - A complete series of compaction tests will be taken for each 4-foot thickness of backfill placed. Each series will consist of tests taken at approximate maximum intervals of 300 feet. Each series will begin above the structure.

2. Connector Pipe Trenches - Compaction tests will be taken on 50% of the laterals, one test for each 4-foot of depth.

3. Any failed test will result in a retest.

14.11 Backfill - The contract item Backfill covers all costs associated with storing and the transporting of suitable surplus excavated material from the overall project site, and the placement

and compaction of such material around the various concrete structures, reinforced concrete box and pipe, and the associated junction structures, headwalls, manholes, transitions, collars and bulkheads within the paylines as shown on the project drawings, standard drawings and as directed by the Engineer.

14.12 Embankment - The contract item Embankment consists of constructing compacted embankment for the following work as shown on the project drawings.

- Portion of the sediment basin embankment (Sheet 36)

No embankment material shall be placed until the foundation for that embankment has been precompacted as required in Section 14.4 and has been approved by the Engineer.

The embankment material shall be obtained from required Basin, Inlet and Outlet Excavation, as directed by the Engineer.

The embankment material shall be free of sod, roots, brush, debris, trash, rocks over 6 inches in largest diameter, and other objectionable material. Clods or hard lumps over 6 inches in greatest dimension shall be broken up before compacting in embankments. All embankments and fills shall be constructed of approved material selected from required excavations as directed by the Engineer.

Material shall be placed in horizontal layers not more than 8 inches in thickness before compaction. If any oversized rock is encountered, it shall be removed from the embankment before compacting.

Material placed in the embankment shall be disked, harrowed or manipulated by other approved methods so as to obtain the best possible mixture and gradation, and shall be free from lenses, pockets, or streaks of material differing substantially in texture and gradation from the surrounding material.

Prior to and during the compaction operations, the material in each layer of the embankment shall, if necessary, be moistened and manipulated to attain moisture content within the range as determined by the Engineer. The moisture content shall be uniform throughout the layer. The moisture content of the soils at the time of compaction shall fall within the range from optimum moisture, to three percent (3%) above optimum.

Embankment material which contains excessive moisture shall not be compacted until the material is sufficiently dry to comply with the specified moisture content. No separate payment will be made for any additional work involved in drying embankment material to the required moisture content.

To obtain the specified moisture content, the Contractor will be required to perform such operations as are considered necessary by the Engineer. Application of water to the material for this purpose shall be done at the site of excavation as far in advance of excavation operations as possible to ensure uniformity of moisture content. Supplementary water, as required, shall be

added to each layer and to the foundation by sprinkling the soil and by disking, harrowing, or otherwise manipulating the soil during and after the time the water is added. No layer of fill shall be compacted before the specified moisture content has been obtained.

The embankment compaction shall be done with a tamping roller, rubber-tired roller or other approved compaction equipment moving parallel to the axis of the embankment and be compacted to not less than ninety-five percent (95%) relative compaction when measured in conformance with California Test Method 216. The method of compaction shall be subject to the approval of the Engineer.

It may be feasible to transport a portion of the materials which are excavated for other parts of the work, and which are suitable for embankment construction, directly to the embankment at the time of making the excavations, however, the Contractor shall be entitled to no additional compensation, above the unit prices named in the Contract Schedule for excavation and embankment, by reason of it being necessary or required by the Engineer, that such excavation materials be deposited in temporary storage piles prior to being placed in the embankments or other mandatory fill areas.

14.13 Controlled Low Strength Material (CLSM) - The contract item Controlled Low Strength Material (CLSM) shall cover all costs and materials associated with the placement of CLSM as specified on drawings and as directed by the Engineer.

CLSM material conformance is specified in Section 16 of these specifications.

14.14 Filter Material - The contract item Filter Material includes all filter material to be placed below the reinforced concrete pipe, box, rock slope protection and various other structures.

The Contractor should note that the placing of filter material will be determined from field conditions as directed by the Engineer.

The materials for filter material shall conform to Sections 90-1.02C and 90-1.02C(4)(a) of the Caltrans Specifications. Grading shall meet the requirements for 1" x No. 4 coarse aggregate as per Section 90-1.02C(4)(b) of the Caltrans Specifications. X values for rock gradation shall be 75 and 15 for 3/4" and 3/8", respectively. The filter material shall be consolidated, and the surface trimmed to final grade as directed by the Engineer.

14.15 Measurement - Excavation; Basin, Inlet and Outlet Excavation; Rock Excavation; Street Pavement Excavation; Maiden Lane Roadway Excavation; Backfill; Embankment; Controlled Low Strength Material (CLSM); and Filter Material beyond the limits established by the project drawings and standard drawings, unless ordered in writing by the Engineer, will not be measured for payment.

The excavated material shall be measured from the ground surface existing at the start of excavation, as determined from surveyed cross sections taken by the District, to the lines, grades and dimensions shown on the drawings. Longitudinal limits of the excavations as shown on the

profile drawings terminate at a vertical plane at the limits of the structure, measured along the longitudinal axis of the various structures.

Measurement for payment for the contract items Excavation; and Basin, Inlet and Outlet Excavation will be the number of cubic yards of material excavated as shown on the project drawings, adding any overexcavation within the limits specified or required by the Engineer. Longitudinal limits of the excavations terminate at a vertical plane at the limits of pipe or structures, measured along the longitudinal axis of the pipe or structure.

Measurement for payment for the contract item Precompaction will be made to the nearest square yard in conformance with the project drawings and as measured in the field.

Measurement for payment for the contract item Rock Excavation will be made only if the Engineer has determined that it qualifies as Rock Excavation per the guidelines set forth in Section 14.6. Areas deemed such shall be cleaned of all loose material and the surface cross section based on survey data to form the lower limit. The cubic yard volume will be determined by the average end area method. Large boulders declared as Rock Excavation may be measured by taking the average circumference and using the formula for a sphere. If the Rock Excavation area is spread over a large area, then as an alternative, grid COGO points may be generated by the District's Surveyors who will create a new digital terrain model to compare the volume reduction as compared to the original digital terrain model within the area. The Contractor shall coordinate with the District's Surveyors regarding the limits of COGO points to be shot and the related time consumption to perform the wok regarding this alternative.

Measurement for payment for the contract item Street Pavement Excavation will be the number of cubic yards of material excavated as shown on the project drawings or as directed by the Engineer.

Measurement for payment for the contract item Maiden Lane Roadway Excavation will be the number of cubic yards of material excavated as shown on the project drawings or as directed by the Engineer.

Measurement for payment for the contract items Backfill; and Embankment will be the number of cubic yards of fill material placed in final position as specified and within the limits of the payment lines shown on the project drawings and standard drawings. Existing (pre-project) grades will be established by the District based on surveyed cross sections. Where Backfill is specified to be placed above existing (pre-project) grades, the volumes above the existing grade will be measured from the ground surface existing prior to placement of any fill compared to the approved finished grades, as determined from surveyed cross sections taken by the District. The longitudinal limits for Backfill shall terminate at a vertical plane at the limits of the pipe or structure, measured along the longitudinal axis of the various pipe or structures. Volumes occupied by structures, aggregate base, asphalt concrete and other feature for which a separate payment is made will be deducted from the gross volume.

Measurement for payment for the contract item Controlled Low Strength Material (CLSM) will be the number of cubic yards of material placed in final position as specified and within the limits of the payment lines as shown on the drawings. The longitudinal limits for CLSM shall

terminate at a vertical plane at the limits of the pipe or structure, measured along the longitudinal axis of the various pipe or structures. Volume occupied by structures, aggregate base, asphalt concrete and other features for which a separate payment is made will be deducted from the gross volume.

Measurement for payment for the contract item Filter Material will be the number of cubic yards of material placed in final position as specified to the lines, grades and dimensions as shown on the drawings or as directed by the Engineer.

14.16 Payment - The contract prices paid for Excavation; Precompaction; Basin, Inlet and Outlet Excavation; Rock Excavation; Street Pavement Excavation; Maiden Lane Roadway Excavation; Backfill; Embankment; Controlled Low Strength Material (CLSM); and Filter Material shall include full compensation for all costs incurred under this section.

SECTION 15 - TRENCH SAFETY SYSTEMS AND FALSEWORK

15.1 Description - This section covers the contract item Trench Safety System and Falsework/Solid Sheeting Trench Safety System and Falsework. This item is defined as methods of protecting employees from cave-ins, from material that could fall or roll from an excavation face or into an excavation, or from the collapse of adjacent structures. Trench safety systems include support systems, sloping and benching systems, shield systems, and other systems that will provide necessary protection. Depending on the shoring condition, solid sheeting trench safety system and falsework may be necessary which includes the necessary falsework such as solid sheeting, bracing support systems and any other support system necessary to adequately support material adjacent to existing improvements to be retained. The item includes the furnishing and implementation of the safety system as required by Section 306-4 of the Greenbook Specifications or as directed by the Engineer.

15.2 Trench Safety System/Solid Sheeting Trench Safety System and Falsework - Excavation for any trench five (5) feet or more in depth shall not begin until the Contractor has provided to the Engineer, a detailed Trench Safety Shoring Plan for worker protection from the hazards of caving ground during the excavation of the trench. The plan shall show the details of the design of shoring, bracing, sloping or other provisions to be made for worker protection including any design calculations done in the preparation of the plan. No such plan shall allow the use of shoring, sloping or a protective system less effective than that required by the Construction Safety Orders of the California Department of Industrial Relations, Division of Occupational Safety and Health Administration (Cal-OSHA). The plan shall be prepared and signed by an engineer who is registered as a Civil Engineer in the State of California, and the plan and design calculations shall be submitted for review in accordance with Section 1.2.

The Trench Safety Shoring Plan shall reflect surcharge loadings imparted to the side of the trench by equipment and stored materials. Surcharge loads shall be monitored to verify that such loads do not exceed the design assumptions for the system.

The Contractor should not assume that only one type of trench safety system such as a shield or "trench box" will be adequate for all trenching situations encountered on a given project.

The Contractor should be prepared with alternative designs should the circumstances dictate the use of such.

The Trench Safety Shoring Plan shall also include the following:

- A safety description of each plan and profile sheet of the project drawings. The plan and profile sheets may be identified by project station locations. Each summary shall include, but not be limited to:

  a. Soil type considerations and data
  b. Excavation depth considerations and data
  c. Utility depth consideration, data and protection plan for the utility
  d. A detail of the shoring plan noting all the information in this section.

  Special attention is also required from Station 13+00 to Station 21+90 due to the deep excavation necessary to construct the storm drain and the nearby sewer line running parallel to the storm drain alignment which shall be protected at all times without any service disruption. Furthermore, special attention is also required to the bifurcation structure on Sheet 10 and other manhole structures, including, but not limited to, the manhole structure at Station 38+94.59 on Sheet 13.

The Trench Safety Shoring Plan shall include a safety system and solid sheeting trench safety system designs for support systems, shield systems or other protective systems whether drawn from manufacturers' data, other tabulated data or designed for this particular project. The Trench Safety Shoring Plan must be signed by a Civil Engineer registered in the State of California prior to submittal to the District for review. Catalogs or engineering data for a product should be identified in the plan as supporting data. All specific items or applicable conditions must be outlined on the submittal.

The State of California Department of Transportation "Trenching and Shoring Manual" will be used as a guide for plan review and approval.

Also included in this item is the fencing and barricading of the open trench as required for the safety of pedestrians and vehicular traffic as directed by the Engineer.

15.3 Falsework - Falsework associated with either of the trench safety items for the construction of bridges and reinforced concrete boxes shall conform with Section 48-2 Falsework of the Caltrans Specifications.

The Falsework plan shall be prepared and signed by an engineer who is registered as a Civil Engineer in the State of California, and the plan and design calculations shall be submitted for review in accordance with Section 1.2 of the Special Provisions.

The State of California Department of Transportation "Falsework Manual" will be used as a guide for plan preparation and review.

15.4 Measurement and Payment - The contract price paid for this item shall include full compensation for all costs incurred under this section. Payment of the lump sum contract price for Trench Safety System and Falsework/Solid Sheeting Trench Safety System and Falsework shall constitute full compensation for furnishing falsework associated with this item, shoring, shoring design and submittals, labor and necessary equipment for the duration of related construction work in area to protect property and improvements as specified, and removal of said shoring when related work is complete.

The payment for the lump sum item will be made on a basis of the percentage of the work completed on the items related to trenching operations.

SECTION 16 - CONCRETE CONSTRUCTION

16.1 Description - This section includes the contract items related to the various classes of Concrete.

16.2 General Requirements - Concrete for all purposes shall be composed of Portland Cement, aggregates and water of the quantities and qualities herein specified, and in the required proportions. The ingredients are to be well mixed (a minimum of 70 drum revolutions, and a maximum of 250 drum revolutions are required to provide sufficient agitation to the concrete mix) and brought to the proper consistency and to have a compressive strength at the age of 28 days of not less than the amount shown in the following tabulation for each type of work listed:

CONCRETE CLASS	MINIMUM SACKS CEMENT/C.Y.	TYPE OF WORK	POUNDS PER SQUARE INCH
A	7.5	Boxes, Transition Structure Nos. 1 and 3, Manhole Nos. 2 and 4, Bifurcation Structure, Energy Dissipator-Impact Basin	6000
A	6	Walls (except Cutoff Walls), and Concrete Bulkhead	4000
A	6	Slope Paving and Footing, Aprons and Access Roads, Sediment Basin Outlet Structure, Concrete Steps, Catch Basins, Drop Inlets, Junction Structure Nos. 1, 2, and 4, Manhole Nos. 1 and 3, Concrete	3250

		Collars, and Sidewalks Monolithically Poured with Catch Basins	
B	5	Local Depressions, Cutoff Walls, Encasements, Curbs, Curb and Gutters, Cross Gutters, Curb and Gutter Transitions, Driveways, Concrete for Grouted Rock, and Miscellaneous Concrete not otherwise specified	3000
E	1/2 Max.	Controlled Low Strength Material (CLSM)	50-100 (hand excavatable)

16.3 Material and Methods - All concrete materials, methods, forms and proportioning shall conform to Sections 51 and 90, and additionally, curb construction shall conform to Section 73 of the Caltrans Specifications. Concrete used for concreted rock shall conform to Section 72-3 of the Caltrans Specifications, except that total penetration of the rock blanket by the concrete will be required, and the outer rocks of the finished rock surface shall project approximately 9 to 12 inches from the concrete surface. Concrete test specimens will be made in accordance with ASTM Designation C-31 and C172. Test for concrete compressive strengths will be performed in accordance with ASTM Designation C-39. Combined aggregate grading for all concrete shall be in conformance with Section 90-1.02C(4)(d) of the Caltrans Specifications and the following tabulation for each type of work listed:

TYPE OF WORK	COMBINED AGGREGATE GRADING
Energy Dissipator - Impact Basin, Bifurcation Structure. The inverts of: Reinforced Concrete Box, Junction Structures, Transition Structures and Manholes.	1-1/2" Maximum
Retaining Walls, Slope Paving and Footing, Box Deck and Walls, Headwalls, Catch Basins, Drop Inlets, Local Depressions, Curb and Gutter, Driveways, Sidewalk, Cutoff Walls, Concrete Bulkheads, Collars, Encasements, Aprons, Access Roads, and other Miscellaneous Concrete not otherwise specified. All other concrete structures.	1" Maximum
Concrete for Grouted Rock	3/8" Maximum
Controlled Low Strength Material (CLSM)	*See below

*Note: Controlled Low Strength Material (CLSM) gradation shall conform to Section 201-6.2.2 of the Greenbook Specifications except that the Contractor has the option to use reclaimed concrete material for the CLSM. The reclaimed material shall meet the same grading requirements as non-reclaimed material set forth in Greenbook Specifications Section 201-6.2.2.

The Contractor may also elect to use an air entrained agent or an accelerant (2% PolarSet or equivalent) to speed up the set time of the CLSM. The Contractor shall submit mix designs for review and approval.

Fly Ash, Class F may be substituted for cement, up to a maximum of 15 percent by weight for all concrete. Fly Ash shall meet the standards of ASTM Designation: C-618. Water reducing agents meeting ASTM Designation: C-494 will be permitted in amounts recommended by the supplier and approved by the Engineer in writing.

No other admixture shall be used in any class of concrete without written permission from the Engineer.

Supplementing Section 90-1.01 of the Caltrans Specifications, prior to placement of any concrete the Contractor shall submit mix designs, for all types of concrete to be placed, to the Engineer for approval. Supplementing Section 90-1.02G(3) of the Caltrans Specifications, concrete delivered to the job site shall be accompanied by a ticket containing the weight of each of the individual ingredients in the mix.

16.4 General Reinforcing Steel Requirements - Reinforcing steel for all reinforced concrete structures shall be Grade 60 Low-Alloy or Grade 60 Billet-Steel. The reinforcing steel for use in structures constructed from State of California, Department of Transportation Standard Plans shall be of Grade 60 or as called for on those plans. Cleaning, bending, placing and spacing of reinforcement shall conform to the applicable provisions of Section 52 of the Caltrans Specifications and to the drawings. The Contractor shall furnish a "Certificate of Compliance" with the specification of ASTM Designation: A-706/A or A-615/A. All splices shall conform to the requirements of A.C.I. Manual, Standard 318, latest edition. Splices requested by the Contractor for his convenience shall be subject to approval by the Engineer. Longitudinal lap shall be 16 inches minimum for #4 bars and 19 inches minimum for #5 bars. Heavy machinery, equipment and vehicles shall be kept off the steel reinforcement when stored or installed.

16.5 Consistency - The consistency of the concrete shall be such as to allow it to be worked into place without segregation. Unless otherwise specified, the slump shall be 3 inches plus or minus 1 inch for all concrete, except the concrete for concreted (grouted) rock shall have a slump of seven (7) inches plus or minus one (1) inch to be sufficient to allow gravity flow into the interstices of the rock with rodding and vibration.

Controlled Low Strength Material (CLSM) flow characteristics shall be determined by the producer to meet job site conditions and shall be approved by the Engineer.

The slump test shall be performed in accordance with the requirements of ASTM Designation: C-143. Slumps greater than those specified may be cause for rejection of the concrete by the Engineer.

16.6 Placing - Supplementing Section 51-1.03D(1) of the Caltrans Specifications, concrete shall not be placed except in the presence of the Engineer. The Contractor shall give reasonable notice to the Engineer each time he intends to place concrete. Such notice shall be far enough in advance to give the Engineer adequate time to inspect the subgrade, forms, steel reinforcement and other preparations for compliance with the specifications before concrete is delivered for placing.

Formed concrete shall be placed in horizontal layers in lifts of not more than 20 inches. Hoppers and chutes, pipes and "elephant trunks" shall be used as necessary to prevent segregation of the concrete.

16.7 Form Removal and Finish - Forms shall be removed only when the Engineer has given his approval. Forms shall be removed in such a way as to prevent damage to the concrete. Supports shall be removed in a manner that will permit the concrete to take stresses due to its own weight uniformly.

Forms shall not be removed sooner than the following minimum time or strength after the concrete is placed. These times represent cumulative number of days and fractions of days, not necessarily consecutive, during which the temperature of the air adjacent to the concrete is above 50 degrees Fahrenheit. If the temperature falls below 50 degrees Fahrenheit at any time after the concrete is placed in the forms, the Engineer will advise the Contractor of additional time required before forms can be removed.

Element	Strength or Time
Retaining Walls, Energy Dissipator - Impact Basin Structure, Basin Outlet Structure	3000 psi or 7 days
Reinforced Concrete Boxes, and Transition Structure No. 1	1600 psi
All other structures	16 hours

The finish on all exposed formed surfaces shall conform to Section 51-1.03F(3) Class 1 Surface Finish of the Caltrans Specifications. Excessive surface working will not be permitted. The exposed concrete surfaces shall be broomed in a transverse direction with a fine textured hair push broom to produce a uniform surface and eliminate float marks. Brooming shall be done when the surface is sufficiently set to prevent deep scarring. If directed by the Engineer, a fine spray of water shall be applied to the surface immediately in advance of brooming.

Exposed corners of all concrete structures shall be finished with a 3/4" chamfer.

Concrete flatwork shall match adjacent surfaces. The concrete shall be struck off and tamped or vibrated until a layer of mortar has been brought to the surface. The top surface and face of curbs, gutters, catch basins and sidewalks shall be finished to match adjacent surfaces.

16.8 Curing - All concrete shall be prevented from drying for a curing period of at least seven (7) days after it is placed. Surfaces exposed to air during the curing process shall be kept continuously moist for the entire period or until curing compound is applied.

Formed surfaces shall be thoroughly wetted immediately after forms are removed and shall be kept wet until patching and repairs are completed. Water or covering shall be applied in such a way that the concrete surface is not eroded or otherwise damaged. Water for curing shall be clean and free from any substances that will cause discoloration of the concrete.

Concrete may be coated with curing compound in lieu of the continued application of moisture. The curing compound shall comply with the requirements of Section 90-1.03B(3) of the Caltrans Specifications and ASTM Designation C-309. The curing compound shall be No. 2 White Pigmented Curing Compound, Type 2, Class B for all concrete surfaces other than for flatwork which shall be coated with No. 6 Nonpigmented Curing Compound, Type 1-D, Class A containing a red fugitive dye.

The curing compound shall be sprayed on the moist concrete surfaces as soon as free water has disappeared, but shall not be applied to any surface until patching, repairs and finishing of that surface are completed. The curing compound shall be thoroughly mixed immediately before applying, and shall be applied at a uniform rate of not less than one gallon per 150 square feet of surface. No separate payment will be made for the curing compound or its application.

16.9 Controlled Low Strength Material (CLSM) Curing - Controlled Low Strength Material (CLSM) must achieve a maximum indentation diameter of three (3) inches as determined under ASTM D6024 before covering.

16.10 Joints - Joints shall be made at the locations shown on the drawings, or as approved by the Engineer.

The Contractor shall construct, in one continuous concrete placing operation, all work comprised between such joints. Joints shall be kept moist until adjacent concrete is placed.

All construction joints having a keyed, stepped, or roughened surface shall be cleaned by sandblasting prior to placement of the adjacent concrete, unless otherwise directed by the Engineer.

The sandblasting operations shall be continued until all unsatisfactory concrete, laitance, coatings, stains, debris, and other foreign materials are removed. The surface of the concrete shall be washed thoroughly to remove all loose material.

Construction joints, when required, shall be straight and finished in a workmanlike manner.

Surfaces of construction joints shall be cleaned as set forth in Section 51-1.03D(4) of the Caltrans Specifications.

For reinforced concrete boxes, keyed transverse construction joints shall be placed not more than 50 feet or be less than 10 feet. Transverse joints in the invert, walls and deck shall be in the same plane. A complete curtain of transverse steel shall be placed three (3) inches from the face of the joints and longitudinal steel will not be continuous through the joints. Transverse construction joints shall be constructed per details on the District's Standard Drawing BX401.

For concrete retaining walls the expansion joints and weakened planes shall be placed and constructed per details on Caltrans Standard Drawings.

16.11 Weepholes - shall be constructed in accordance with the drawings and at locations directed by the Engineer. All weepholes shall be 2-1/2 inches in diameter unless noted otherwise on the drawings.

Weepholes may be formed by removable round wooden dowels, Schedule 40 PVC Pipe or greater, or by other methods acceptable to the Engineer.

All weepholes shall have a rodent screen consisting of 1/4-inch mesh, 16-gauge galvanized hardware cloth securely and permanently attached over the drain opening in a manner approved by the Engineer.

Filter material for the weepholes shall be one inch (1") nominal size crushed rock conforming to the gradation of Section 200-1.2 of the Greenbook Specifications. Filter material shall also meet the quality requirements of Sections 200-1.1 and 200-1.2 of the Greenbook Specifications.

Filter material shall be wrapped in a single layer of filter fabric as shown on the drawings or approved by the Engineer. Filter fabric shall be Class A per Section 96-1.02B of the Caltrans Specifications.

Filter fabric shall be furnished in protective wrapping which shall protect the fabric from ultraviolet radiation and from abrasion due to shipping and handling. The fabric shall also be ultraviolet stabilized.

The fabric shall be placed in the manner and at the locations shown on the drawings. The surface to receive the fabric shall be prepared to a smooth condition free of obstructions and debris.

The fabric shall be covered within 72 hours of its placement. Should the fabric be damaged during construction, the torn or punctured section shall be repaired or replaced as directed by the Engineer.

No separate payment will be made for the installation of the weephole, hardware cloth, filter material or filter fabric.

16.12 Use of the Concrete Invert - Dump trucks, concrete trucks and earth moving equipment (whether full or empty) will not be allowed to operate on the concrete.

A small crane with capacity not to exceed 10 tons will be permitted to operate on the concrete invert for the purpose of setting and moving forms, and erecting the steel reinforcement for the walls. Wheel loading types and amounts will be subject to the approval of the Engineer. Vehicles of 3/4 ton capacity (or less) will also be permitted access to the invert. The speed of any vehicle using the invert will be limited to 10 m.p.h. maximum to avoid impact loading.

No other category of equipment, except that specifically approved by the Engineer in writing will be permitted to use the concrete invert for access to the work area.

In any event, vehicular access to the invert will not be permitted until the concrete has achieved its design strength. Approval for access to use the invert shall not relieve the Contractor of the responsibility to avoid damage to the concrete. Cracking, displacement or other damage which occurs to the invert will be cause to restrict some or all of the categories of equipment allowed access to the invert. Repair or replacement of damaged concrete will be required.

16.13 Class "A" Concrete, Reinforced Concrete Box - The contract item Class "A" Concrete, Reinforced Concrete Box covers all materials, labor and costs for the complete construction of all reinforced concrete boxes. Included in the pay item is all reinforcing steel required, but exclusive of earthwork.

Reinforced concrete box walls shall be constructed by placing the concrete directly against timber or steel sheeting used as the outside form and shoring. Sheeting shall be closely fitted and extend a minimum of 12 inches above the ground surface. Unless otherwise directed, all sheeting shall be removed and the void created shall be immediately backfilled with a well graded sand and thoroughly jetted to the relative densities specified in Backfill.

The Contractor has an option of forming both sides of the reinforced concrete box walls, however, due to additional loads on the box structure resulting from this trench condition, the Contractor will be required to submit an alternate box design prepared by a Civil Engineer registered in the State of California. All alternate box designs are subject to the approval of the Engineer and no additional payment will be made for the alternate box if approved.

If the box is constructed from State of California, Department of Transportation Standard Plans, either method of forming noted in the above paragraphs may be used without an alternate box design being submitted.

Loading and vehicular use of box deck slab shall comply with the requirements of Section 51-1.03B of the Caltrans Specifications (also apply to bridge deck slab).

Also included in this item of work will be the construction of the weepholes if required in the invert slab or sides of the reinforced concrete box.

16.14 Class "A" Concrete, Bifurcation Structure - The contract item Class "A" Concrete, Bifurcation Structure covers all materials, labor and costs for the complete construction of the bifurcation structure and associated manhole. Included in the pay item is the manhole frame and cover pressure type, and all earthwork and reinforcing steel required.

16.15 Class "A" Concrete, Energy Dissipator - Impact Basin - The contract item Class "A" Concrete, Energy Dissipator - Impact Basin covers all materials, labor and costs for the complete construction of the structure. Included in this pay item are all concrete elements of the structure, the armor plates, chain link fence on top of the structure and reinforcing steel required per Greenbook Standard 384-3, exclusive of the retaining walls, cutoff walls, rock slope protection, access ramps and all earthwork located at the downstream terminus of the proposed project outside of the impact basin structure. The structure shall be constructed per Greenbook Standard 384-3 using W = 28' for dimensions and "strength design" bar designation for steel schedule.

16.16 Class "A" Concrete, Sediment Basin Outlet Structure - The contract item Class "A" Concrete, Sediment Basin Outlet Structure covers all materials, labor and costs for the complete construction of the Sediment Basin Outlet Structure. Included in the pay item are the concrete steps, grates, support beams, manhole frame and cover, steel steps, and all earthwork and reinforcing steel required.

16.17 Class "A" Concrete, Walls - The contract item Class "A" Concrete, Walls covers all materials, labor and costs for the complete construction of wing walls and headwalls, retaining walls and their associated footings. Included in the pay item is all earthwork and reinforcing steel.

The construction of various size cutoff walls shall be paid under separate contract items.

16.18 Class "A" Concrete, Minor Structures - The contract item Class "A" Concrete, Minor Structures covers all materials, labor and costs for the complete construction of catch basins, special connections to catch basins per Standard Drawing No. CB109, drop inlets, collars, concrete bulkheads, sidewalks monolithically poured with catch basins, concrete aprons and access roads. Included in the pay item is all earthwork and reinforcing steel required for these structures, but exclusive of the required miscellaneous iron and steel.

16.19 Class "A" Concrete, Slope Paving and Footing - The contract item Class "A" Concrete, Slope Paving and Footing includes the complete construction of slope paving and footing on the northern end of the sediment basin and the construction of weepholes, if required. Included in the pay item is all earthwork and reinforcing steel.

16.20 Class "B" Concrete, 4' Cutoff Wall - The contract item Class "B" Concrete, 4' Cutoff Wall covers all materials, labor and costs for the complete construction of 4' cutoff walls where specified on the drawings and as detailed on Sheet 51. Included in the pay item is all earthwork and reinforcing steel.

16.21 Class "B" Concrete, 6' Cutoff Wall - The contract item Class "B" Concrete, 6' Cutoff Wall covers all materials, labor and costs for the complete construction of 6' cutoff walls where specified

on the drawings and as detailed on Sheet 51. Included in the pay item is all earthwork and reinforcing steel.

16.22 Class "B" Concrete, Miscellaneous - The contract item Class "B" Concrete, Miscellaneous covers all materials, labor and costs for the complete construction of the curbs, curb and gutters, cross gutters, curb and gutter transitions, driveways, local depressions and any other concrete not specified. Included in the pay item is all earthwork and reinforcing steel required. The subgrade for cross gutters and driveways shall be recompacted to ninety-five percent (95%) relative compaction prior to the placement of concrete.

16.23 Class "B" Concrete, Concreted Rock - The contract item Class "B" Concrete, Concreted Rock covers all materials, labor and costs for the concrete to be used to "grout" or concrete the invert rock and rock slope protection as shown on the project drawings. Excluded from this item is the riprap which is covered in Section 26 of these Detailed Specifications.

Concrete for concreted rock shall be Class "B" and shall have a slump sufficient to allow gravity flow into the interstices of the rock with rodding and vibration. Concrete for concreted rock shall be placed in accordance with Section 72-3.03E of the Caltrans Specifications except that total penetration of the rock blanket by the concrete will be required, and the outer rocks of the finished rock surface shall project approximately 9 to 12 inches from the concrete surface.

16.24 Transition Structures - The contract item Transition Structure Nos. 1 and 3 covers all materials, labor and costs for the complete construction of these various structures, including reinforcing steel but exclusive of earthwork.

16.25 Junction Structure No. 2 - The contract item Junction Structure No. 2 covers all materials, labor and costs for the complete construction of these structures, including reinforcing steel, exclusive of earthwork.

No separate payment will be made for Junction Structure No. 3 or Junction Structure No. 4.

16.26 Junction Structure No. 8 - The contract item Junction Structure No. 8 covers all materials, labor and costs for the complete construction of this structure, including all earthwork and reinforcing steel required.

16.27 Manholes - The contract items Manhole Nos. 1, 2, 3 and 4; Manhole No. 2 with Safety Ledge, and Manhole No. 3 with Safety Ledge cover all materials, labor and costs for the complete construction of these various structures, including reinforcing steel, exclusive of earthwork and the miscellaneous iron and steel.

The manhole rings are required and shall conform to ASTM Designation: C-478, and the drawings. The rings shall be laid up, using Type II modified cement with a 1:2 mix mortar and with 1/2-inch minimum thickness pointed joints. On completion, vertical wall section shall not be out of plumb by more than 1/2-inch in 10 feet of vertical height. The manhole rings shall also be accurately aligned. The cast iron manhole frame and cover shall be installed, with frame accurately

set to finished grade of pavement, in mortar well tamped around the perimeter of frame to ensure full bearing.

16.28 Measurement - Measurement for payment for the contract items Class "A" Concrete, Reinforced Concrete Box; Class "A" Concrete, Walls; Class "A" Concrete, Minor Structures; Class "A" Concrete, Slope Paving and Footing; and Class "B" Concrete, Miscellaneous will be the number of cubic yards placed as specified, measured to the neat lines as shown on the drawings.

No measurement will be made for the lump sum contract items Class "A" Concrete, Bifurcation Structure; Class "A" Concrete, Energy Dissipator - Impact Basin; and Class "A" Concrete, Sediment Basin Outlet Structure.

Measurement for payment for the contract items Class "B" Concrete, 4' Cutoff Wall; and Class "B" Concrete, 6' Cutoff Wall will be the number of cubic yards placed as specified, measured to the neat lines as shown on the project drawings.

Measurement for payment for the contract item Class "B" Concrete, Concreted Rock will be the number of cubic yards placed as directed by the Engineer, measured at the mixer as provided in Section 72-3.04 of the Caltrans Specifications.

Measurement for payment for the contract items Transition Structure No. 1; Transition Structure No. 3; Junction Structure No. 2; Junction Structure No. 8; Manhole No. 1, Manhole No. 2, Manhole No. 3; Manhole No. 4; Manhole No. 2 with Safety Ledge; and Manhole No. 3 with Safety Ledge; will be the number of each type constructed as specified.

No measurement or payment will be made for Junction Structure Nos. 3 and 4.

No measurement or payment will be made for dowels, tie bars, tie wires, blocks, chairs and other accessories.

16.29 Payment - The contract prices paid for the various Concrete items shall include full compensation for all costs incurred under this section.

SECTION 17 - CONCRETE PIPE

17.1 Description - This section covers the contract items Reinforced Concrete Pipe; and Velocity Control Rings of the various sizes as required for the work.

17.2 General Pipe Requirements - Pipe materials, manufacture and quality, shall conform to ASTM Designation: C-76 or C-655. The Engineer shall be furnished a "Certificate of Compliance" signed by the manufacturer of the pipe certifying that the pipe conforms to the ASTM requirements. All pipe and pipe material supplied by the Contractor shall be new.

The District will also require the D-load bearing strength test conforming to ASTM C497 for new pipe 30" or greater, in conformance with Sections 207-2.9.1(1) and 207-2.9.2 of the

Greenbook Specifications as a basis for acceptance of the pipe. The test shall be performed in the presence of the Engineer.

Pipe shall be laid in a trench free of ponded water in conformance with Section 306-5, with joints in conformance with Section 306-7.3 of the Greenbook Specifications.

Pipe ends shall be cleaned and moistened prior to making up joint.

17.3 Reinforced Concrete Pipe - The contract items for the various Reinforced Concrete Pipe include the furnishing and installing of the various pipe as specified, exclusive of earthwork.

17.4 Velocity Control Rings - The contract items for the various sizes of Velocity Control Rings include the furnishing and installing of the rings as specified per Greenbook Standard 383-2, exclusive of earthwork.

17.5 Pipe on Curves - Unsymmetrical closure of pipe joints shall not exceed 1 inch pull on the outside of the curve when pull is measured at the spring line on the inside of the pipe. Mortar joints on curves shall conform in strength, texture of mortar finish and tightness to the joints for straight ended pipe.

When beveled pipe is used the maximum deflection angle shall not exceed 6 degrees unless shown on the plans or approved by the Engineer.

17.6 Measurement - Measurement for payment of the contract items Reinforced Concrete Pipe of the various sizes and classes will be the number of lineal feet of each class installed as specified measured along the centerline of the pipe in place including curves.

Measurement for payment of the contract item Velocity Control Rings of the various sizes will be the number of each type constructed as specified.

17.7 Payment - The contract prices paid for Reinforced Concrete Pipe; and Velocity Control Rings shall include full compensation for all costs incurred under this section.

SECTION 18 - NOT USED

SECTION 19 - FLEXIBLE PAVEMENT CONSTRUCTION

19.1 Description - This section covers the contract items Asphalt Concrete Grinding; Aggregate Base, Class 2; Maiden Lane Aggregate Base, Class 2; Hot Mix Asphalt (HMA); Maiden Lane Hot Mix Asphalt (HMA); 6" AC Dike per Riverside County Standard No. 212; 8" AC Dike per Riverside County Standard No. 212; Type D HMA Dike per Caltrans Standard No. A87B; Type E HMA Dike per Caltrans Standard No. A87B; and Temporary Resurfacing.

19.2 General Flexible Pavement Construction Requirements - In order to reduce inconvenience to local residents, prevent damage to existing pavement and completed work by stormwater runoff and traffic, diminish or eliminate erosion from the construction zone, and restore traffic in full on

Grand Avenue, the Contractor shall construct full street pavement section and complete the pavement replacement from the beginning of pavement work at Station 11+86.41 to Station 21+64.75, including the intersection of Grand Avenue and Maiden Lane. The work within this length shall be completed in two stages, immediately after the end of each phase of the storm drain construction on Grand Avenue, as shown on the Sheets TC3 and TC4 of the Traffic Control Plans.

Temporary resurfacing shall not be used within this length unless otherwise approved by the Engineer.

Temporary resurfacing shall not be used for the new street construction on Maiden Lane between Station 10+00.00 and Station 16+70.00 as shown on Sheets 56 and 57 - Pavement Plan for Maiden Lane, unless otherwise approved by the Engineer.

The Contractor shall phase the pavement restoration for the remaining of the project in respect to reducing the inconvenience to local residents, in accordance with the storm drain, paving and traffic control plans, and to the satisfaction of the Engineer.

The cost of phasing shall be included in the lump sum price for the contract item Mobilization and/or the respective unit prices for contract items referenced directly or indirectly in this section.

19.3 Asphalt Concrete Grinding - The contract item Asphalt Concrete Grinding covers the grinding/header cut and the removal of all materials including asphalt concrete pavement and aggregate base to the depths and dimensions as specified and as shown on the project drawings and the legal disposal of all surplus material. All HMA and P.C.C. shall be sawcut unless otherwise specified.

Included in this contract item is the recompaction of the existing aggregate base to 95% relative compaction should the aggregate base be accidentally exposed after grinding of existing asphalt concrete.

Exclusive of this contract item is the asphalt concrete excavation within the trench excavation limits which will be measured and paid by the contract item Excavation.

The cold planing machine shall have a cutter head at least 72 inches wide and shall be operated so as not to produce fumes or smoke.

The final cut shall result in a uniform surface conforming to the typical cross sections. The outside lines of the planed area shall be neat and uniform. The road surfacing to remain in place shall not be damaged in any way.

The material planed from the roadway surface, including material deposited in existing gutters or on the adjacent traveled way, shall be immediately removed from the work site and disposed of outside the right of way. The removal crew shall follow within 50 feet of the planer unless otherwise directed by the Engineer.

19.4 Aggregate Base, Class 2 - The contract item Aggregate Base, Class 2 includes furnishing and placing such material as indicated on the drawings. Aggregate Base, Class 2 shall be clean and free from roots, organic material and other deleterious substances, and be of such character that when wet it will compact to form a firm stable base. Material and placing shall be in accordance with Section 26 of the Caltrans Specifications using 3/4-inch maximum size.

The aggregate base shall also have a sand equivalent value of not less than 35 when tested in conformance with California Test Method 217.

Exclusive of this item is any aggregate base to be furnished and installed on the existing unpaved portion of Maiden Lane which will be covered by the contract item Maiden Lane Aggregate Base, Class 2.

The aggregate base material shall be spread as specified in Sections 26-1.03A and 26-1.03D of the Caltrans Specifications. The aggregate base material shall be compacted as specified in Section 26-1.03E of the Caltrans Specifications.

19.5 Maiden Lane Aggregate Base, Class 2 - The contract item Maiden Lane Aggregate Base, Class 2 includes furnishing and placing such material as indicated on the drawings to construct new pavement and gutter on the existing unpaved portion of Maiden Lane between Cottrell Boulevard and the proposed sediment basin as shown on Sheets 55-57. The requirements for Maiden Lane Aggregate Base, Class 2 shall be identical to those specified in Section 19.4.

19.6 General Hot Mix Asphalt (HMA) Requirements - The Contractor shall not start paving Hot Mix Asphalt (HMA) until all compaction on the aggregate base is tested and approved by the Engineer.

The HMA shall be proportioned, mixed, spread and compacted in accordance with the applicable provisions in Section 39-2 of the Caltrans Specifications and these Detailed Specifications.

The Contractor shall ensure the safe transportation, storage, use and legally dispose of HMA.

The Contractor shall prevent the formation of carbonized particles caused by overheating HMA during manufacturing or construction.

19.7 Hot Mix Asphalt (HMA) Aggregate - Aggregates shall be clean and free from decomposed materials, organic material, and other deleterious substances. Coarse aggregate is material retained on the No. 4 sieve and fine aggregate is material passing the No. 4 sieve. Supplemental fine aggregate is added fine material passing the No. 30 sieve including, but not limited to, cement and stored fines from dust collectors.

The aggregate grading of the different types of Hot Mix Asphalt (HMA) shall conform to the following, unless otherwise specified on the plans:

HMA Type	Grading
A	¾-inch and/or ½-inch

The base course of the HMA shall consist of ¾-inch aggregate for Type A and the final surface course for Type A shall consist of ½-inch aggregate. The use of Reclaimed Asphalt Pavement (RAP) will be allowed up to 15 percent of the aggregate blend in the base course (bottom layer). RAP will not be allowed in the surface course (top layer).

The combined aggregate gradation and quality characteristics for HMA Type A prior to addition of asphalt binder, shall conform to the requirements found in the following tables:

Aggregate Gradation HMA Type A
(Percentage Passing)

¾-inch HMA Type A

Sieve Sizes	Target Value Limits	Allowable Tolerance
1-inch	100	-
¾-inch	90-98	TV ±5
½-inch	70-90	TV ±6
No. 4	42-58	TV ±5
No. 8	29-43	TV ±5
No. 30	10-23	TV ±4
No. 200	2.0-7.0	TV ±2.0

Aggregate Gradation HMA Type A
(Percentage Passing)

½-inch HMA Type A

Sieve Sizes	Target Value Limits	Allowable Tolerance
¾-inch	100	-
½-inch	95-98	TV ±5
3/8-inch	72-95	TV ±5
No. 4	52-69	TV ±5
No. 8	35-55	TV ±5
No. 30	15-30	TV ±4
No. 200	2.0-8.0	TV ±2.0

HMA Type A Aggregate Quality

Quality Characteristic	Test Method	Requirement
Percent of crushed particles[1]	AASHTO T 335	
Coarse aggregate (min, %)		
One fractured face		95
Two fractured faces		90

Fine aggregate (min, %) Passing No. 4 sieve and retained on No. 8 sieve (min, %) One fractured face		70
Los Angeles Rattler (max, %)[1] Loss at 100 Rev. Loss at 500 Rev.	AASHTO T 96	 12 40
Sand equivalent[1, 2] (min)	AASHTO T 176	47
Fine aggregate angularity (min, %)[1,3]	AASHTO T 304	45
Flat and elongated particles (max, % by weight at 5:1)[1]	ASTM D 4791	10

Note: [1]Combine aggregate in the job mix formula proportions.

[2]The reported value must be the average of three tests from a single sample. Use of a sand reading indicator is required as shown in AASHTO T 176, Figure 1. Sections 4.7 "Manual Shaker", 7.1.2 "Alternate Method No. 2", and 8.4.3 "Hand Method", do not apply. Prepare the stock solution as specified in Section 4.8.1 "Stock Solution with Formaldehyde", except omit the addition of formaldehyde.

[3]The Engineer waives this specification if the Type A HMA contains 10 percent or less of non-manufactured sand by weight of total aggregate. Manufactured sand is fine aggregate produced by crushing rock or gravel.

19.8 Asphalt Binder - The asphalt binder to be mixed with aggregate shall conform to these Detailed Specifications and shall be as designated below or as determined by the Engineer:

- Grade PG 64-10 (Inland Valleys)

The Contractor shall furnish and place the HMA with all asphaltic emulsions required.

Asphalt binder shall consist of refined petroleum or a mixture of refined liquid asphalt and refined solid asphalt, prepared from crude petroleum. Asphalt binder shall be:

- Free from residues caused by the artificial distillation of coal, coal tar or paraffin
- Free from water
- Homogeneous

The Contractor shall furnish asphalt binder from a supplier that conforms to the State of California Department of Transportation's "Asphalt Supplier Certification Program". The Department maintains the program requirements, procedures, and a list of approved suppliers at https://mets.dot.ca.gov/aml/AsphaltBindersList.php.

The amount of asphalt binder to be mixed with the mineral aggregate shall be between three percent (3%) and seven percent (7%) by weight, of the dry mineral aggregate. The exact amount of asphalt binder to be mixed with the mineral aggregate shall be determined by a special mix design.

Performance grade paving asphalt shall conform to the testing requirements in the table below:

Performance Graded Asphalt Binder

Property	AASHTO Test Method	Specification Grade			
		PG 64-10	PG 64-16	PG 70-10	PG 64-28PM[i]
Original Binder					
Flash Point, Minimum °C	T48	230	230	230	230
Solubility, Minimum %[b]	T44	99	99	99	97.5
Viscosity[c] at 135 °C, Maximum, Pa·s	T316	3.0	3.0	3.0	3.0
Dynamic Shear, Test Temp. at 10 rad/s, °C Minimum G*/sin(delta), kPa	T315	64 1.00	64 1.00	70 1.00	64 1.00
RTFO Test[e], Mass Loss, Maximum, %	T240	1.00	1.00	1.00	1.00
RTFO Test Aged Binder					
Dynamic Shear, Test Temp. at 10 rad/s, °C Minimum G*/sin(delta), kPa	T315	64 2.20	64 2.20	70 2.20	64 2.20
Ductility at 25 °C Minimum, cm	T51	75	75	75	-
Dynamic Shear, Test Temp. at 10 rad/s, °C Minimum (delta), %	T315	-	-	-	Note g 80
PAV[f] Aging, Test Temperature, °C	R28	100	100	110	100
Elastic Recovery[h], Test Temp., °C Minimum recovery, %	T 301	-	-	-	25 75
RTFO Test and PAV Aged Binder					
Dynamic Shear, Test Temp. at 10 rad/s, °C Maximum G*/sin(delta), kPa	T315	31[d] 5000	28[d] 5000	34[d] 5000	22 5000
Creep Stiffness, Test Temperature, °C Maximum S-value, Mpa Minimum M-value	T313	0 300 0.300	-6 300 0.300	0 300 0.300	-18 300 0.300

Notes:

a. Not used.

b. The Engineer will waive this specification if the supplier is a Quality Supplier as defined by Department's "Certification Program for Suppliers of Asphalt".

c. The Engineer will waive this specification if the supplier certifies the asphalt binder can be adequately pumped and mixed at temperatures meeting applicable safety standards.

d. Test the sample at 3 °C higher if it fails at the specified test temperature. G*sin(delta) shall remain 5000 kPa maximum.

e. "RTFO Test" means the asphaltic residue obtained using the Rolling Thin Film Oven Test, AASHTO Test Method T240 or ASTM Designation: D2827.

f. "PAV" means Pressurized Aging Vessel.

g. Test temperature is the temperature at which G*/sin(delta) is 2.2 kPa. A graph of log G*/sin(delta) plotted against temperature may be used to determine the test temperature when G*/sin(delta) is 2.2 Kpa. A graph of (delta) versus temperature may be used to determine delta at the temperature when G*/sin(delta) is 2.2 kPa. The Engineer also accepts direct measurement of (delta) at the temperature when G*/sin(delta) is 2.2 kPa.

h. Test without a force ductility clamp may be performed.

i. Do not modify PG Polymer Modifier using acid modification.

Certificates of compliance shall be furnished to the Engineer certifying that the asphaltic emulsions and paving asphalts conform to the referenced Greenbook Specifications.

19.9 Hot Mix Asphalt (HMA) Paint Binder/Tack Coat - Asphaltic emulsion for paint binder (tack coat) shall conform to the provisions in Section 94 "Asphaltic Emulsion" of the Caltrans Specifications for the rapid-setting or slow-setting type and grade approved by the Engineer. Grade CQS1 shall be used if not otherwise specified by the Engineer. Tack coat shall be applied to all vertical surfaces of existing pavement, curbs, gutters, and construction joints in the surfacing against which additional material is to be placed, to a pavement to be surfaced, and to other surfaces designated in the Detailed Specifications. The application rate shall be from 0.02 to 0.10 gallon per square yard of surface covered. The exact rate and number of applications will be determined by the Engineer.

19.10 Hot Mix Asphalt (HMA) Placement - Hot Mix Asphalt (HMA) shall be spread and compacted in the number of layers of the thicknesses indicated in the following table:

Total Thickness Shown on Plans[1]	Minimum No. of Layers	Top Layer Thickness (ft.)		Next Lower Layer Thickness (ft.)		All Other Lower Layer Thickness (ft.)	
		Min.	Max.	Min.	Max.	Min.	Max.
0.24-foot or less	1	-	-	-	-	-	-
0.25-foot	2	0.12	0.13	0.12	0.13	-	-
0.26 - 0.46-foot	2	0.12	0.21	0.14	0.25	-	-
0.47-foot or more	3 or more	0.15	0.21	0.15	0.25	0.17	0.25

[1]When pavement reinforcing mat is shown to be placed between layers of HMA, the thickness of HMA above the pavement reinforcing mat shall be considered to be the "total thickness shown on plans".

The straightedge for smoothness determination on the top layer of HMA pavement shall conform to the straightedge tolerances specified in Section 36-3.01D(4) of the Caltrans Specifications.

The longitudinal paving joints in the top layer must match either the lane lines or street centerline and not to be at the trench limits. Placement of longitudinal joints shall confirm to the requirements in Section 39-2.01C(4) "Longitudinal Joints" of the Caltrans Specifications.

Areas of the top surface of the uppermost layer of HMA pavement that do not meet the specified surface tolerances shall be brought within tolerance by abrasive grinding. Areas which have been subjected to abrasive grinding shall receive a seal coat. The corrective method for each

area shall be selected by the Contractor and shall be approved by the Engineer prior to beginning the corrective work.

When abrasive grinding is used to bring the top surface of the uppermost layer of HMA surfacing within the specified surface tolerances, additional abrasive grinding shall be performed as necessary to extend the area ground in each lateral direction so that the lateral limits of grinding are at a constant offset from, and parallel with, the nearest lane line or pavement edge, and in each longitudinal direction so that the grinding begins and ends at lines normal to the pavement centerline, within a ground area. Ground areas shall be neat rectangular areas of uniform surface appearance.

19.11 Hot Mix Asphalt (HMA) - The contract item Hot Mix Asphalt (HMA) covers the furnishing and installation of HMA necessary for the repair and resurfacing of streets damaged or removed due to construction operations, or as otherwise specified on the plans, including all aggregate, asphalt binder, and tack coat/paint binder as specified herein, exclusive of any excavation or pavement grinding.

Also exclusive of this item is any HMA to be furnished and installed on the existing unpaved portion of Maiden Lane which will be covered by the contract item Maiden Lane Hot Mix Asphalt (HMA).

19.12 Maiden Lane Hot Mix Asphalt (HMA) - The contract item Maiden Lane Hot Mix Asphalt (HMA) covers the furnishing and installation of HMA necessary to construct new pavement on the existing unpaved portion of Maiden Lane between Cottrell Boulevard and the proposed hammer head turn around area as shown on Sheets 55-57, including all aggregate, asphalt binder and tack coat/paint binder as specified herein, exclusive of any Maiden Lane Roadway Excavation which shall be paid as a separate item in Section 14 of these Detailed Specifications.

19.13 6" AC Dike per Riverside County Standard No. 212 - The contract item 6" AC Dike per Riverside County Standard No. 212 covers all labor, equipment and materials needed for the construction of 6" AC Dikes per Riverside County Standard No. 212 where specified on the drawings. Asphalt and aggregates for these dikes shall conform to Section 39-2.01B(11) of the Caltrans Specifications. The asphalt surface shall be cleaned thoroughly prior to applying any tack coat. Included in the pay item is all earthwork required to establish lines and grades per the drawings.

19.14 8" AC Dike per Riverside County Standard No. 212 - The contract item 8" AC Dike per Riverside County Standard No. 212 covers all labor, equipment and materials needed for the construction of 8" AC Dikes per Riverside County Standard No. 212 where specified on the drawings. Asphalt and aggregates for these dikes shall conform to Section 39-2.01B(11) of the Caltrans Specifications. The asphalt surface shall be cleaned thoroughly prior to applying any tack coat. Included in the pay item is all earthwork required to establish lines and grades per the drawings.

19.15 Type D HMA Dike per Caltrans Standard No. A87B - The contract item Type D HMA Dike per Caltrans Standard No. A87B covers all labor, equipment and materials needed for the

construction of Type D HMA dikes per Caltrans Standard No. A87B where specified on the project drawings. Asphalt and aggregates for these dikes shall conform to Section 39-2.01B(11) of the Caltrans Specifications. The asphalt surface shall be cleaned thoroughly prior to applying any tack coat. Included in the pay item is all earthwork required to establish lines and grades per the project drawings.

19.16 Type E HMA Dike per Caltrans Standard No. A87B - The contract item Type E HMA Dike per Caltrans Standard No. A87B covers all labor, equipment and materials needed for the construction of Type E HMA dikes per Caltrans Standard No. A87B where specified on the drawings. Asphalt and aggregates for these dikes shall conform to Section 39-2.01B(11) of the Caltrans Specifications. The asphalt surface shall be cleaned thoroughly prior to applying any tack coat. Included in the pay item is all earthwork required to establish lines and grades per the project drawings.

19.17 Temporary Resurfacing - The contract item Temporary Resurfacing is required for short reaches of the mainline and connector pipe trenches whenever excavation is made through pavement on which traffic must be allowed immediately after backfilling, only as directed by the Engineer. Otherwise the leveling course of the HMA may be used to open the work area to traffic until the final paving is completed. Measurement and payment of the leveling course will be made as an HMA item, not Temporary Resurfacing.

Temporary Resurfacing shall be 2" (0.17') and in conformance with Section 306-13 of the Greenbook Specifications.

19.18 Measurement - Measurement for payment for the contract item Asphalt Concrete Grinding will be the number of square feet of material excavated as shown on the drawings or as directed by the Engineer.

Measurement for payment of the contract items Aggregate Base, Class 2; and Maiden Lane Aggregate Base, Class 2 will be the number of cubic yards placed to the lines, grades and dimensions shown on the drawings. **No allowance will be made for aggregate base placed outside said dimensions unless otherwise ordered by the Engineer.**

Measurement for payment of the contract items Hot Mix Asphalt (HMA); and Maiden Lane Hot Mix Asphalt (HMA) will be the number of tons placed to the lines, grades and dimensions shown on the drawings. The HMA pay quantity shall be determined by using a conversion factor of 144 pounds per cubic foot for all HMA placed within standard paylines. No measurement for payment will be made for asphalt emulsions, including asphalt binder, HMA tack coat/paint binder required for this portion of the work, all costs for these items shall be included in the price paid for HMA. **No allowance will be made for HMA placed outside said dimensions unless otherwise ordered by the Engineer.**

Measurement for payment of the contract items 6" AC Dike per Riverside County Standard No. 212; 8" AC Dike per Riverside County Standard No. 212; Type D HMA Dike per Caltrans Standard No. A87B; and Type E HMA Dike per Caltrans Standard No. A87B will be the number

of lineal feet placed as shown on the drawings. No measurement for payment will be made for asphalt emulsion, tack coat or earthwork.

Measurement for payment of the contract item Temporary Resurfacing will be the number of tons placed as specified in Section 19.17 and as directed by the Engineer.

19.19 Payment - The contract prices paid for Asphalt Concrete Grinding; Aggregate Base, Class 2; Maiden Lane Aggregate Base, Class 2; Hot Mix Asphalt (HMA); Maiden Lane Hot Mix Asphalt (HMA); 6" AC Dike per Riverside County Standard No. 212; 8" AC Dike per Riverside County Standard No. 212; Type E HMA Dike per Caltrans Standard No. A87B; Type D HMA Dike per Caltrans Standard No. A87B and Temporary Resurfacing shall include full compensation for all costs incurred under this section.

SECTION 20 - FENCES AND GATES

20.1 Description - This section covers the contract items 6-Foot Chain Link Fence; Temporary Fencing; Cable Railing; 12-Foot Double Drive Gates; 14-Foot Double Drive Gates; and 16-Foot Double Drive Gates.

20.2 6-Foot Chain Link Fence - The contract item 6-Foot Chain Link Fence includes furnishing and installing the material required for this portion of the work as shown on the drawings and as directed by the Engineer. Included in this item is all hardware parts, posts and fittings. Also included in this item of work will be the removal and relocation, if required, of chain link fence as noted on the drawings and as directed by the Engineer.

All materials shall be new unless otherwise specified on the project drawings for removal and relocation, or unless the use of salvaged materials is approved by the Engineer. Materials salvaged shall be subject to the Engineer's approval prior to reinstallation. New fencing materials shall conform to Section 206-6 of the Greenbook Specifications and the project drawings. All installation shall be in conformance with Section 304-3.2 of the Greenbook Specifications. All posts shall be set in commercial plant quality, 4 sack per cubic yard concrete.

20.3 Temporary Fencing - The contract item Temporary Fencing shall include all labor, materials and equipment necessary for installing, maintaining and removing the temporary fencing and removing and reinstalling the property line fences as shown on the project drawings, and as directed by the Engineer. The temporary fencing shall be a 6-foot high chain link fence in good condition subject to the Engineer's approval. Fencing materials need not be new and fence posts need not be set in concrete.

Excluded in this contract item is all required fencing installed to adequately secure any open trench as required by Section 15 - Trench Safety Systems and Falsework of these Detailed Specifications.

20.4 Cable Railing - The contract item Cable Railing includes furnishing and installing the material required for this portion of the work. Included in this item is all hardware, parts, posts and fitting in conformance with Section 83-2.07 of the Caltrans Specifications.

20.5 12-Foot Double Drive Gates - The contract item 12-Foot Double Drive Gates includes furnishing and installing the various gates as shown on the drawings, complete with all gate posts set in concrete and in conformance with Section 304-3.3 of the Greenbook Specifications. Padlocks are not included in this item. On completion, gates shall operate freely without wedging or binding.

20.6 14-Foot Double Drive Gates - The contract item 14-Foot Double Drive Gates includes furnishing and installing the various gates as shown on the drawings, complete with all gate posts set in concrete and in conformance with Section 304-3.3 of the Greenbook Specifications. Padlocks are not included in this item. On completion, gates shall operate freely without wedging or binding.

20.7 16-Foot Double Drive Gates - The contract item 16-Foot Double Drive Gates includes furnishing and installing the various gates as shown on the drawings, complete with all gate posts set in concrete and in conformance with Section 304-3.3 of the Greenbook Specifications. Padlocks are not included in this item. On completion, gates shall operate freely without wedging or binding.

20.8 Measurement - Measurement for payment for the contract item 6-Foot Chain Link Fence will be the number of lineal feet of new fence installed measured along the top of the fence parallel to the ground.

Measurement for payment for the contract item Temporary Fencing will be the number of lineal feet of fencing installed for the temporary fencing and relocations.

Measurement for payment for the contract item Cable Railing will be the number of lineal feet of new cable railing installed along the top of the railing parallel to the ground.

Measurement for payment for the contract items 12-Foot Double Drive Gates; 14-Foot Double Drive Gates; and 16-Foot Double Drive Gates will be the number of pairs installed. Excavation and concrete required for fence or gate posts will not be measured for payment.

20.9 Payment - The contract price paid for 6-Foot Chain Link Fence; Temporary Fencing; Cable Railing; 12-Foot Double Drive Gates; 14-Foot Double Drive Gates; and 16-Foot Double Drive Gates shall include full compensation for all costs incurred under this section.

SECTION 21 - MISCELLANEOUS

21.1 Description - This section covers the contract items Miscellaneous Iron and Steel; Delineators; Remodel 4-Inch Vitrified Clay Pipe (VCP) Sewer House Connection; Relocate Waterline House Service Connection; Adjust Sewer Manhole to Grade; Adjust Water Valve to Grade; Barricade; and Extra Directed Work.

21.2 Miscellaneous Iron and Steel - The contract item Miscellaneous Iron and Steel covers all ferrous metal used in the various hydraulic structures. Materials, parts and fittings shall conform with the following:

(a) Manhole Frames and Covers - Per ASTM Designation: A-48, Class 35B. Manhole frames and covers shall be minimum weight as shown on the plans, and the weight of each frame and cover shall be indicated thereon in white paint. Style and markings shall be approved by the Engineer. The castings shall be free from cracks, blowholes or other imperfections, straight, true to pattern and have a uniform finish. The castings for manholes in streets shall be thoroughly cleaned and coated with asphaltum paint of approved composition; all other castings for frames and covers shall be cleaned and galvanized. The cover shall fit firmly into the frame without rocking, with the frame accurately placed so that cover is flush with finish paving. All covers shall be provided with socket set screw locking devices. Drill and tap two holes to a depth of one-inch at 90 degrees to pick hole and install 3/4-inch x 3/4-inch stainless steel socket set screws with 3/8-inch recessed hex head. All threads shall be National Coarse threading.

(b) All other Miscellaneous Metal - Per ASTM Designation: A-36.

(c) Galvanizing - Except for manhole frames and covers described above, all exposed ferrous metal shall be galvanized per Section 210-3 of the Greenbook Specifications.

21.3 Delineators - The contract item Delineators includes the material, equipment and labor necessary to install each delineator as shown on the project drawings.

The delineators shall be in accordance with State of California, Department of Transportation Standard Plan A73-C, Class 1, Type F and shall conform to Section 81 of the Caltrans Specifications.

21.4 Remodel 4-Inch Vitrified Clay Pipe (VCP) Sewer House Connection - The contract item Remodel 4-Inch Vitrified Clay Pipe (VCP) Sewer House Connection pertains to the removing of interfering portions of sewer house connections and replacing with new pipe and any mainline modification required. The remodeling shall be done in accordance with the drawings, including excavation, backfill and any concrete encasement but excluding asphalt concrete or aggregate base in this item of work. Only the VCP sewer house connections interfering with the RCB or pipe conduit to be constructed will be measured for payment.

21.5 Relocate Waterline House Service Connection - The contract item Relocate Waterline House Service Connection covers all labor, equipment, materials and incidentals required for the complete removal up to the mainline of all interfering waterline house service connections and relocating using new pipe, and salvaging and reinstalling of any associated meters and valves.

Included in this item is any earthwork required, aggregate base and asphalt concrete used for resurfacing the street outside the storm drain trench, testing, dewatering, disinfection and

incidentals required to safely relocate interfering house service waterlines per Elsinore Valley Municipal Water District (EVMWD) standards and specifications.

Excluded from this item is excavation, aggregate base and asphalt concrete used for resurfacing the street within the storm drain trench limits, which is included in contract items Excavation; Aggregate Base, Class 2; and Hot Mix Asphalt (HMA).

Excluded from this item are all labor, equipment, materials and incidentals for the waterline house service connections specified in the Water Improvement Plans (Sheets W1 to W5 of the project drawings).

Prior to any remodeling, the Contractor shall contact EVMWD to obtain and comply with any specifications or requirements regarding the remodeling. The Contractor may obtain this information from 31315 Chaney Street, Lake Elsinore, CA 92530.

21.6 Adjust Sewer Manhole to Grade - The contract item Adjust Sewer Manhole to Grade covers all labor, equipment, materials and incidentals required for the complete adjustment of all sewer manholes within the limits of the street improvements to meet the finished street grade.

Sewer manhole frames within the area to be paved or graded shall be set to finish grade by the Contractor. Manholes in asphalt concrete pavement shall be set to finish grade in accordance with provisions of Section 403-3 of the Greenbook Specifications. In case of Portland cement concrete pavement, manhole frames shall be set to finish grade before paving. Repaving required as a result of reconstructing or adjusting all manhole and vault frames and covers to grade shall be the responsibility of the Contractor and the cost thereof shall be included in the bid item for hot mix asphalt. The Contractor shall remove all debris from the interior of manholes and shall clean all foreign material from the top of the frames and covers.

21.7 Adjust Water Valve to Grade - The contract item Adjust Water Valve to Grade covers all labor, equipment, materials and incidentals required for the complete adjustment of all water valves within the limits of the street improvements to meet the finished street grade.

21.8 Barricade - The contract item Barricade includes the material, equipment and labor necessary to install the barricade as shown on the drawings. The barricade shall be in accordance with Riverside County Standard No. 810.

Workmanship for metal components and hardware must be equivalent to good commercial practice. Edges, bolt holes, and surfaces must be free of torn metal, burrs, sharp edges and protrusions. The metal work shall be fabricated in the shop. Do not punch, cut or weld in the field.

21.9 Extra Directed Work - The contract item Extra Directed Work shall consist of necessary work that is not included in other contract bid items and not shown on the project drawings, as determined by the Engineer. All Extra Directed Work shall be performed only as directed by the Engineer and in accordance with all applicable standards and specifications.

21.10 Measurement - Measurement for payment for the contract item Miscellaneous Iron and Steel will be the number of pounds used in the work as specified. Should manhole frames and covers exceed the minimum weights as shown on the drawings by more than two percent (2%) that weight in excess of the allowable two percent (2%) increase will not be measured for payment. Manhole frames and covers to be salvaged and reused will not be measured for payment.

Measurement for payment for the contract item Delineators will be for each installation.

Measurement for payment for the contract item Remodel 4-Inch Vitrified Clay Pipe (VCP) Sewer House Connection will be the number of lineal feet of 4-inch vitrified clay pipe installed. There will be no separate payment for special fittings or joint materials and modification to the main line.

Measurement for payment for the contract item Relocate Waterline House Service Connection will be the number of lineal feet of house service waterline pipe installed. There will be no separate payment for special fittings or joint materials and modification to the main line.

Measurement for payment for the contract item Adjust Sewer Manhole to Grade shall be the number of manholes that are adjusted to meet the finished street grade.

Measurement for payment for the contract item Adjust Water Valve to Grade shall be the number of valves that are adjusted to meet the finished street grade.

Measurement for payment for the contract item Barricade shall be the number of lineal feet installed as specified.

21.11 Payment - The contract prices paid for Miscellaneous Iron and Steel; Delineators; Remodel 4-Inch Vitrified Clay Pipe (VCP) Sewer House Connection; Relocate Waterline House Service Connection; Adjust Sewer Manhole to Grade; Adjust Water Valve to Grade; Barricade; and Extra Directed Work shall include full compensation for all costs incurred under this section.

Full compensation for the contract item Extra Directed Work shall be as "Extra Work" and shall be paid pursuant to Section 2.07 of the General Provisions. The total accumulated costs for Extra Directed Work shall not exceed the amount specified in the contract bid item unless otherwise increased by change order.

SECTION 22 THROUGH SECTION 25 - NOT USED

SECTION 26 - STONEWORK

26.1 Description - This section covers the contract items Rock Slope Protection, Class VII (1/2-Ton) Rock; Rock Slope Protection, Class V (1/4-Ton) Rock; Rock Slope Protection, Class III (150 lbs.) Rock; Access Road Crushed Rock; Rock Slope Protection (RSP) Filter Fabric; Low Flow Trench Gravel; and Low Flow Trench Filter Fabric.

26.2 General - All rock materials (except Access Road Crushed Rock) shall meet the gradation requirements of Section 72-2.02B of the Caltrans Specifications and the quality requirements of Sections 200-1.6.1 and 200-1.6.3 of the Greenbook Specifications.

Rock materials shall be blocky and predominantly angular in shape. Not more than 25% of the rock shall have a length more than 2.5 times the breadth or thickness. No rock shall have a length exceeding 3.0 times its breadth or thickness. All oversize rocks, as determined by the Engineer, shall be removed.

Rock materials shall be placed on a firm dry foundation in conformance with Placement Method B of Section 72-2.03 of the Caltrans Specifications, unless otherwise noted, however, additional placement effort shall be required to meet the lines, grades and rock exposure requirements above finished grade as shown on the project drawings and to fill and chink oversize voids with selected rock to establish a stable interlock. Chinking of voids will not be required for rock specified to be concreted.

Permeable materials such as filter blankets shall be consolidated, and the surface trimmed to final grade as directed by the Engineer.

Concrete for concreted (grouted) rock shall be Class "B", and shall be in accordance with Sections 16.2, 16.3, 16.5, and 16.22 of these Detailed Specifications to allow gravity flow into the interstices of the rock with rodding and vibration. Concrete for concreted rock shall be placed in accordance with Section 72-3.03E of the Caltrans Specifications except that total penetration of the rock blanket by the concrete will be required, and the outer rocks of the finished rock surface shall project approximately 9 to 12 inches from the concrete surface.

26.3 Rock Slope Protection, Class VII (1/2-Ton) Rock; Rock Slope Protection, Class V (1/4-Ton) Rock; and Rock Slope Protection, Class III (150 lbs.) Rock - The contract items Rock Slope Protection, Class VII (1/2-Ton) Rock; Rock Slope Protection, Class V (1/4-Ton) Rock; and Rock Slope Protection, Class III (150 lbs.) Rock covers the rock furnished and placed as shown on the drawings as specified. Rock shall conform to Class VII (1/2-Ton), Class V (1/4-Ton), and Class III (150 lbs.), for Method B placement per Section 72-2.02B of the Caltrans Specifications.

26.4 Access Road Crushed Rock - The contract item Access Road Crushed Rock covers complete installation of crushed rock on access roads, turn arounds, and loading areas and within District right of way as shown on the project drawings and as directed by the Engineer. Grading for the Access Road Crushed Rock shall meet the requirements for 1" x No. 4 coarse aggregate as per Section 90-1.02C(4)(b) of the Caltrans Specifications. X values for rock gradation shall be 75 and 15 for 3/4" and 3/8", respectively. Access Road Crushed Rock shall additionally meet the spreading and compaction requirements of Sections 26-1.03D and 26-1.03E of the Caltrans Specifications, respectively. Furthermore, Access Road Crushed Rock depth shall not exceed 3" and shall be subject to approval by the Engineer.

Such exposed crushed rock used on access roads or other areas as shown on the project drawings shall not contain recycled concrete products.

26.5 Rock Slope Protection (RSP) Filter Fabric - The contract item Rock Slope Protection (RSP) Filter Fabric covers the RSP Filter Fabric, and all associated appurtenances, furnished and installed as shown on the project drawings and as specified. Filter Fabric placed beneath rock shall conform Section 96-1.02I of the Caltrans Specifications and shall be Class 8. A six-inch minimum layer of filter material shall be placed over the fabric prior to placing rock unless otherwise shown on the plans.

Prior to placing RSP Filter Fabric, the surfaces upon or against which filter fabric is to be placed shall be free of loose or extraneous material and sharp objects that may damage the fabric during installation. Placement of RSP Filter Fabric shall not occur on paved slope areas.

RSP Filter Fabric shall be handled and placed in conformance with the manufacturer's recommendations and as directed by the Engineer. Filter Fabric shall be placed loosely upon or against the surface to receive the fabric so that the fabric conforms to the surface without damage when the cover material is placed.

RSP Filter Fabric shall be joined, at the option of the Contractor, either with overlapped joints or stitched seams.

When fabric is joined with overlapped joints, adjacent borders of the finished fabric shall be overlapped not less than 24 inches. The fabric shall be placed such that the fabric being placed shall overlap the adjacent section of fabric in the direction the cover material is being placed.

When the fabric is joined by stitched seams, the fabric shall be stitched with yarn of a contrasting color. The size and composition of the yarn shall be as recommended by the fabric manufacturer. The number of stitches per inch of seam shall be approximately 5 to 7. The strength of stitched seams shall be the same as specified for the fabric, except when stitched seams are oriented up and down a slope, the strength shall be a minimum of eighty percent (80%) of that specified for the fabric.

Equipment or vehicles shall not be operated or driven directly on the Filter Fabric.

RSP Filter Fabric damaged during placement shall be replaced or repaired, as directed by the Engineer, by the Contractor at the Contractor's expense. Fabric damaged beyond repair, as determined by the Engineer, shall be replaced. Repairing damaged fabric shall consist of placing new fabric over the damaged area. The minimum fabric overlap from the edge of the damaged area shall be 3 feet for overlap joints. If the new fabric joints at the damaged areas are joined by stitching, the stitched joints shall conform to the requirements specified above.

A six-inch minimum layer of Filter Material shall be placed over the RSP filter fabric prior to placing Class VII (1/2-Ton) Rock, Class V (1/4-Ton) Rock, or Class III (150 lbs.) Rock unless otherwise shown on the plans. Payment for furnishing and installing Filter Material shall be paid under Section 14.14 of these Detailed Specifications.

26.6 Low Flow Trench Gravel - The contract item Low Flow Trench Gravel covers the rock placed at the bottom of the Sediment Basin along its flowline over filter fabric as shown on Sheets 36 and 38 of the plans.

The gradation for Low Flow Trench Gravel shall conform to the following table:

1-1/2" to 2-1/2" Gravel Gradation
(Percentage Passing)

Sieve Sizes	Target Value Limits
3-inch	100
2½-inch	90-100
2-inch	35-70
1½-inch	0-15
¾-inch	0-5

Gravel must be clear, washed, dry and free from clay or organic material. The finished gravel trench surface must be smooth, uniform and maintain the design flowlines, slope gradients and contours shown on the project drawings.

26.7 Low Flow Trench Filter Fabric - The contract item Low Flow Trench Filter Fabric placed beneath low flow trench gravel shall conform to Section 96-1.02B of the Caltrans Specifications and shall be Class A.

For surface preparation, handling, placement, joining, repair and replacement of filter fabric see Section 26.5 of these Specifications.

26.8 Measurement - Measurement for payment for the contract items Rock Slope Protection, Class VII (1/2-Ton) Rock; Rock Slope Protection, Class V (1/4-Ton) Rock; Rock Slope Protection, Class III (150 lbs.) Rock; Access Road Crushed Rock; and Low Flow Trench Gravel; including all rock to be concreted, shall be the number of cubic yards placed as specified.

Measurement for payment for the contract item Rock Slope Protection (RSP) Filter Fabric; and Low Flow Trench Filter Fabric shall be the number of square yards placed as specified. No measurement for payment will be made for laps required for installation or for convenience to the Contractor.

Concrete for concreted rock shall be measured and paid for as specified under the Concrete Construction Section of these Specifications, and no additional payment for labor, equipment, materials or incidentals for concreting rock will be made.

26.9 Payment - The contract prices paid for Rock Slope Protection, Class VII (1/2-Ton) Rock; Rock Slope Protection, Class V (1/4-Ton) Rock; Rock Slope Protection, Class III (150 lbs.) Rock; Access Road Crushed Rock; Rock Slope Protection (RSP) Filter Fabric; Low Flow Trench Gravel; and Low Flow Trench Filter Fabric shall include full compensation for all costs incurred under

this section with the exception of concrete for concreted rock which shall be measured and paid for as specified under the Concrete Construction Section of these Specifications.

SECTION 27 - DUST ABATEMENT

27.1 Description - This section covers the implementation of dust control measures necessary to prevent harm and nuisance from dust. Supplementing Section 8.06 of the General Provisions, the Contractor shall comply with all the provisions of the South Coast Air Quality Management District (SCAQMD) Rule 403 as described in Appendix "A".

27.2 Dust Abatement - The contract item Dust Abatement includes the action necessary to prevent, reduce or control dust within the work area as required to complete the work. The Contractor shall carry out proper and efficient measures to prevent his operations from producing dust in amounts damaging to property or causing a nuisance, or harm to persons living nearby or occupying buildings in the vicinity of the work. The methods to be used for controlling dust in the construction area and along haul roads shall be approved by the Engineer prior to starting any work included in this contract. The Rule 403 Implementation Handbook published by the SCAQMD contains a detailed listing of reasonably available dust control measures and is available for inspection at the District office.

27.3 Payment - The contract lump sum price paid for Dust Abatement shall include full compensation for all direct and indirect costs incurred under this section.

This payment will be made on a basis of the percentage of work completed on the entire project.

SECTION 28 - HYDROSEEDING

28.1 Description - This section covers the contract item Hydroseeding as directed by the Engineer. The outside of levee and channel embankments, cut or fill slopes, disturbed creek bottom, and all exposed or stripped areas (including TCE's) within the project limits shall be hydroseeded.

28.2 Hydroseeding - This item includes the furnishing of all materials, incidentals, labor and equipment necessary to complete the work as specified herein, and as directed by the Engineer. All hydroseeding work shall be done by fully qualified and experienced personnel.

The hydroseeding materials shall not be stored onsite without prior approval of the Engineer as to location, duration and method of storage. All debris and excess materials shall be removed on a daily basis, unless otherwise authorized by the Engineer. The Contractor shall leave the work area in a clean and finished appearance upon completion of hydroseeding.

28.3 Equipment and Materials - The equipment shall be a mobile mounted unit in a fully operational and well maintained condition, meeting the requirements of Section 21-2.03D of the Caltrans Specifications. Fiber shall be produced from natural or recycled (pulp) fiber and shall meet the requirements of Section 21-2.02D of the Caltrans Specifications. Stabilizing binder upon

drying shall allow water and air penetration, shall be non-flammable, shall have an effective life of at least 1 year, and shall not be toxic to plants and animals.

All seed shall be delivered to the site tagged and labeled in accordance with the California Agricultural Code. Seed shall be of a quality which has a minimum pure live seed content (% of purity x % germination) as specified and weed seed shall not exceed 0.5% of the aggregate of pure live seed and other material.

A commercial Ammonium Phosphate fertilizer shall be used containing a minimum of 16% nitrogen, 20% available phosphoric acid and 0% water soluble potash, uniform in composition, dry and free flowing, pelleted or granular. All fertilizer shall be delivered in unbroken or unopened containers, labeled in accordance with applicable State regulations and bearing the warranty of the producer for the grade furnished.

28.4 Application - The Engineer shall review and approve completion of all construction and grading prior to any section being approved as ready for hydroseeding application. All disturbed areas shall be scarified and hydroseeded as directed by the Engineer.

The Contractor shall provide a written submittal of the per load mix tabulation, based on a ratio of the tank capacity and the equipment utilized for the project. The Contractor's submittal will be reviewed for acceptance by the Engineer well in advance of anticipated start of hydroseeding.

The Contractor shall provide a sample demonstration area for application by preparing one load of hydroseed mix. The demonstration areas shall be wet down thoroughly prior to application. The Engineer shall review and approve the sample section for compliance and workmanship. Upon approval, this area shall become the sample for all remaining application. No hydroseeding shall take place during high winds or during periods of rainfall.

Areas designated for hydroseeding shall receive an application made with an overlapping fan motion to provide a full and even spread throughout the coverage area.

The Contractor shall hydroseed all disturbed graded areas with native grass species. The native grass species seed mix shall be approved by the District prior to application.

28.5 Measurement - Measurement for the contract item Hydroseeding will be made on the basis of the actual area treated to the nearest one hundredth (0.01) acre as measured by the Engineer.

28.6 Payment - The contract price paid for Hydroseeding shall include full compensation for all costs incurred under this section. No payment shall be made for the Hydroseeding required as a result of the Contractor or his subcontractor disturbing areas outside of the project limits.

SECTION 29 - STORMWATER AND NON-STORMWATER POLLUTION CONTROL

29.1 Description - This section covers the contract items Stormwater and Non-Stormwater Pollution Control; and Non-Stormwater Discharge or Dewatering. The contract item Stormwater

and Non-Stormwater Pollution Control shall include preparing, obtaining approval of, amending and implementing the Permit Registration Documents (PRDs) as required by the State Water Resources Control Board (SWRCB) and the California Regional Water Quality Control Board (CRWQCB) - Santa Ana Region. The contract item Non-Stormwater Discharge or Dewatering shall include compliance with Santa Ana Regional Water Quality Board Order No. R8-2015-0004.

29.2 General Requirements - All activities performed by the Contractor for this project shall conform to the requirements of the State-wide National Pollutant Discharge Elimination System (NPDES) General Permit (Board Order No. 2009-0009-DWQ, NPDES No. CAS000002 as amended by Board Order No. 2010-0014-DWQ and Board Order No. 2012-0006-DWQ) for Stormwater Discharges Associated with Construction and Land Disturbance Activities, hereafter referred to as the "General Permit", issued by the SWRCB. This General Permit regulates both stormwater and non-stormwater discharges associated with Contractor's construction activities. This General Permit can be downloaded at http://www.swrcb.ca.gov/water_issues/programs/stormwater/constpermits.shtml.

The PRDs mentioned above consist of:

1. Notice of Intent
2. Risk Assessment (Section VIII of the General Permit)
3. Site Map
4. Stormwater Pollution Prevention Plan (SWPPP) (Section XIV of the General Permit)
5. Annual Fee
6. Signed Certification Statement

Notice of Intent - The District will complete and submit the Notice of Intent.

Risk Assessment - Using the methodology in Appendix 1 of the General Permit, the District has calculated the preliminary Risk Level to be 1 based on returning disturbed areas to pre-construction conditions at the end of the day.

Site Map - The Contractor shall revise District provided site map of the project area if Contractor's Qualified SWPPP Developer (QSD) deems necessary. Site Map shall conform to requirements of General Permit Attachment A, Section B.

SWPPP - For the convenience of the Contractor and to expedite the SWPPP preparation and approval, a "90%" SWPPP Template has been prepared by the District. This SWPPP Template has been tailored to the referenced project and can be downloaded from https://content.rcflood.org/documents/SWPPP-Template-30002001.pdf or obtained from the District in CD form. Winning bidder will be provided a Word document of the "90%" SWPPP Template to amend. The Contractor shall review and amend this SWPPP Template based on the requirements of the General Permit and per the construction schedule and work plan proposed by the Contractor. The Contractor shall then submit a SWPPP certified by the Contractor's QSD which conforms to Section 29.3 for District review and approval.

The Contractor shall amend and finalize the complete "90%" SWPPP Template referenced above. The Contractor shall, at a minimum, provide and/or prepare the following:

1. Name and contact information for the Contractor's Qualified SWPPP Practitioner (QSP) and QSD
2. Contractor name and contact information
3. Contractor site contact person and emergency contact person information
4. Verification of disturbance area due to construction
5. Construction commencement date
6. Anticipated construction completion date
7. Construction Activity Schedule/Best Management Practices (BMPs) Installation Schedule
8. Name and contact information for personnel responsible for pre-storm, post-storm and storm event BMP inspections – this should be the project's QSP
9. Name of the lab responsible for testing any stormwater samples for non-visible pollutants
10. Verification of project risk level and permit type (Linear Underground/Overhead Project (LUP) or Traditional)
11. List of all subcontractors that will be working on the project
12. Review and finalize water pollution control drawings

The SWPPP shall be certified by the Contractor's QSD and implemented by the Contractor's QSP. The SWPPP shall be developed based on the format outlined in the CASQA SWPPP Template located in the California Stormwater Quality Association (CASQA) Construction BMP Handbook Portal and modified as required to meet the LUP specific requirements set forth in the General Permit Attachment A. The portal can be found on the CASQA Website: www.casqa.org. The SWPPP shall identify site specific BMPs to be implemented during and after construction to minimize the potential pollution of stormwater runoff and downstream receiving waters. The identified BMPs shall be practices designed to minimize or eliminate the discharge of pollutants from the construction site and Contractor's construction activities, including, but not limited to:

1. Good housekeeping practices for solid and sanitary/septic waste management, vehicle and equipment cleaning/maintenance, and material handling and storage.

2. Construction procedures such as stabilized construction access points, scheduling/phasing to minimize areas of soil disturbance, soil stabilization and erosion/sediment control.

The SWPPP shall also stipulate an ongoing program for monitoring and maintenance of all BMPs.

The SWPPP shall be designed to address the following objectives:

1. All pollutants and their sources, including sources of sediment associated with construction, construction site erosion and all other activities associated with construction activity are controlled;
2. Where not otherwise required to be under a Regional Water Board permit, all non-stormwater discharges are identified and either eliminated, controlled, or treated;
3. Site BMPs are effective and result in the reduction or elimination of pollutants in stormwater discharges and authorized non-stormwater discharges from construction activity to the Best Available Technology/Best Conventional Technology (BAT/BCT) standard;
4. Calculations and design details as well as BMP controls for site run-on are complete and correct; and
5. Stabilization BMPs, installed to reduce or eliminate pollutants after construction, are completed.

To demonstrate compliance with requirements of the General Permit, the QSD shall include information in the SWPPP that supports the conclusions, selections, use, and maintenance of BMPs.

The Contractor shall make the SWPPP available at the construction site during working hours while construction is occurring and shall be made available upon request by a State or Regional Board inspector. When the original SWPPP is retained by a crewmember in a construction vehicle and is not currently at the construction site, current copies of the BMPs and map/drawing will be left with the field crew and the original SWPPP shall be made available via a request by radio/telephone.

Annual Fee - The District will pay any necessary fees.

Signed Certification Statement - The Contractor's QSD shall submit a signed certification certifying the SWPPP is a true, accurate and complete representation of the proposed project and mitigation measures.

In the event the District incurs any Administrative Civil Liability or Mandatory Minimum (fine) imposed by the CRWQCB - Santa Ana Region, as a result of Contractor's failure to fully implement the provisions of this section and permit requirements, "Stormwater and Non-Stormwater Pollution Control", the Engineer may, in the exercise of his sole judgment and discretion, withhold from payments otherwise due Contractor a sufficient amount to cover the Civil Liability. Liability for "Negligent Violations" may be in an amount up to $50,000 per day per deemed occurrence while "Knowing Violations" can result in fines as high as $250,000 and imprisonment.

Stormwater and Non-Stormwater Pollution Control work shall conform to the requirements in the latest version of the CASQA Handbook, entitled **"California Stormwater BMP Handbook - Construction"**. A copy of the "California Stormwater BMP Handbook - Construction", hereafter referred to as the "CASQA Handbook", may be obtained from CASQA, Post Office Box 2105, Menlo Park, California 94026-2105. Telephone: 650.366.1042. Copies of the CASQA Handbook can also be downloaded from the CASQA Construction BMP Handbook Portal.

The Contractor shall be responsible for all costs and for any liability imposed by law as a result of the Contractor's failure to comply with the requirements set forth in this section, "Stormwater and Non-Stormwater Pollution Control", including but not limited to, compliance with the applicable provisions of the CASQA Handbook, General Permit, General De Minimus Permit, Federal, State and local regulations. For the purpose of this paragraph, costs and liabilities include, but are not limited to, fines, penalties and damages whether assessed against the District or the Contractor, including those levied under the Federal Clean Water Act and the State Porter-Cologne Water Quality Act.

The Contractor shall become fully informed of and comply with the applicable provisions of the CASQA Handbook, General Permit, General De Minimus Permit, and Federal, State and local regulations that govern the Contractor's activities and operation pertaining to both stormwater and non-stormwater discharges from both the project site and areas of disturbance outside the project limits during construction. The Contractor shall, at all times, keep copies of the General Permit, General De Minimus Permit, approved SWPPP and all amendments at the project site. The SWPPP shall be made available upon request of a representative of the SWRCB, CRWQCB, United States Environmental Protection Agency (USEPA) or local stormwater management agency. Requests by the public shall be directed to the Engineer.

The Contractor is solely and exclusively responsible for any arrangements made between the Contractor and other property owners or entities that result in disturbance of areas or construction activities being conducted outside limits of the designated rights-of-way and temporary construction easements as shown on the project drawings.

The Contractor shall, during work hours, allow authorized agents of the CRWQCB, SWRCB, USEPA or local stormwater management agency, upon the presentation of credentials and other documents as may be required by law, to:

1. Enter upon the construction site and the Contractor's facilities pertinent to the work;
2. Have access to and copy any records required to be kept as specified in the General Permit;
3. Inspect the construction site, including any offsite staging areas or material storage areas, and related soil stabilization practices and sediment control BMPs; and
4. Sample or monitor for the purpose of ensuring compliance with the General Permit.

The Contractor shall notify the Engineer immediately upon request from regulatory agencies to enter, inspect, sample, monitor or otherwise access the project site or the Contractor's records.

29.3 PRDs Preparation and Approval - The Contractor shall prepare and obtain approval of the PRDs as part of the Stormwater and Non-Stormwater Pollution Control work for this contract. The SWPPP shall include an appropriate Monitoring and Reporting Program (M&RP) as required by Section M, "Monitoring and Reporting Requirements" of Attachment A of the General Permit. A guidance document titled "Field Monitoring and Analysis Guidance" is available from the CASQA internet site in their Construction BMP Handbook Portal. The Contractor shall prepare

and implement the SWPPP in accordance with the CASQA Handbook, the General Permit and these Detailed Specifications.

In case of conflict between the CASQA Handbook and these Detailed Specifications, the Detailed Specifications shall govern; in case of conflict between these Detailed Specifications and the General Permit, the latter shall govern.

Within five (5) working days after the award of the contract, the Contractor shall submit two (2) copies of the PRDs to the Engineer for review and approval. The Contractor shall allow ten (10) working days for the Engineer to review the PRDs. If revisions are required as determined by the Engineer, the Contractor shall revise and resubmit the PRDs within three (3) working days of receipt of the Engineer's comments and shall allow ten (10) working days for the Engineer to review the revisions. The Contractor shall submit four (4) hard copies and one (1) pdf copy of the approved SWPPP to the Engineer prior to the pre-construction meeting. **The Contractor must have approved PRDs prior to the pre-construction meeting**.

The SWPPP shall incorporate BMPs in each of the following categories:

1. Soil stabilization practices;
2. Sediment control practices;
3. Sediment tracking control practices;
4. Wind erosion control practices; and
5. Non-stormwater management, and waste management and disposal control practices.

Specific objectives and minimum requirements for each category of BMPs are described in the CASQA Handbook. The Contractor shall consider the objectives and minimum requirements presented in the CASQA Handbook for each of the above categories. When minimum requirements are listed for any category, the Contractor shall incorporate one or more of the listed minimum BMPs required into the SWPPP and implement them on the project to meet the pollution control objectives for the category. In addition, the Contractor shall consider other BMPs presented in the CASQA Handbook to supplement the minimum BMPs required when necessary to meet the objectives of the SWPPP and maintain compliance with the General Permit. The Contractor shall document the selection process in accordance with the procedure specified in the CASQA Handbook.

The Contractor should not assume that the minimum BMPs required for each category presented in the CASQA Handbook are adequate to meet the pollution control objectives. The Contractor may use other effective BMPs, as approved by the Engineer, in addition to the minimum as required in the CASQA Handbook to achieve the pollution control objectives.

The SWPPP shall include the following items as described in the CASQA Handbook and General Permit:

Section 1 - SWPPP Requirements:

1.1 Introduction
1.2 PRDs
1.3 SWPPP Availability and Implementation
1.4 SWPPP Amendments
1.5 Retention of Records
1.6 Required Non-Compliance Reporting
1.7 Annual Report
1.8 Changes to Permit Coverage
1.9 Notice of Termination

Section 2 - Project Information:

2.1 Project and Site Description
2.2 Permits and Governing Documents
2.3 Stormwater Run-on from Offsite Areas
2.4 Findings of the Construction Site Sediment and Receiving Water Risk Determination
2.5 Construction Schedule
2.6 Potential Construction Site Pollutant Sources
2.7 Identification of Non-Stormwater Discharges
2.8 Required Site Map Information

Section 3 - Best Management Practices:

3.1 Schedule for BMP Implementation
3.2 Erosion Control and Sediment Control
3.3 Non-Stormwater Controls, Waste and Material Management
3.4 Post-Construction Stormwater Management Measures

Section 4 - BMP Inspection and Maintenance:

4.1 BMP Inspection and Maintenance

Section 5 - Training

Section 6 - Responsible Parties and Operators:

6.1 Responsible Parties
6.2 Contractor List

Section 7 - Monitoring and Reporting Program (M&RP):

7.1 Objectives
7.2 M&RP Implementation Schedule

7.3 LUP Monitoring and Reporting Requirements
7.4 Monitoring for Non-Visible Pollutants

To ensure that the preparation, implementation, and oversight of the SWPPP is sufficient for effective pollution prevention, individuals responsible for creating, revising, overseeing, and implementing the SWPPP should participate in applicable training programs and document such training in the SWPPP. A copy of the SWPPP should be located at the construction site.

The following notes (or notes of substantially similar intent) that address pollution prevention to the Maximum Extent Practicable during the construction phase of a project on a year-round basis need to be placed on the Stormwater and Non-Stormwater Pollution Control Drawings:

- Erosion control BMPs shall be implemented and maintained to minimize and/or prevent the entrainment of soil in runoff from disturbed soil areas on construction sites.
- Sediment control BMPs shall be implemented and maintained to prevent and/or minimize the transport of soil from the construction site.
- Stockpiles of soil shall be properly contained to eliminate or reduce sediment transport from the site to streets, drainage facilities or adjacent properties via runoff, vehicle tracking or wind.
- Appropriate BMPs for construction-related materials, wastes, spills or residues shall be implemented to eliminate or reduce transport from the site to streets, drainage facilities or adjoining properties by wind or runoff.
- Runoff from equipment and vehicle washing shall be contained at construction sites and must not be discharged to receiving waters or the local storm drain system. Washwaters or rinsate from ready mix, concrete, or cement vehicles must be handled appropriately and may not be discharged to receiving waters or any storm drain system.
- All construction contractor and subcontractor personnel are to be made aware of the required BMPs and good housekeeping measures for the project site and any associated construction staging areas.
- At the end of each day of construction activity all construction debris and waste materials shall be collected and properly disposed in trash or recycle bins.
- Construction sites shall be maintained in such a condition that a storm does not carry wastes or pollutants off the site. Discharges other than stormwater (non-stormwater discharges) are prohibited, except as authorized by an individual NPDES Permit or the State-wide General Permit for Stormwater Discharges Associated with Construction Activity. Potential pollutants include but are not limited to: solid or liquid chemical spills; wastes from paints, stains, sealants, solvents, detergents, glues, lime, pesticides, herbicides, fertilizers, wood preservatives and asbestos fibers; paint flakes or stucco fragments; fuels, oils, lubricants and hydraulic, radiator or battery fluids; concrete and related cutting or curing residues; floatable wastes; wastes from engine/equipment steam cleaning or chemical degreasing; wastes from street cleaning; and super-chlorinated potable

water from line flushing and testing. During construction, disposal of such materials should occur in a specified and controlled temporary area onsite physically separated from potential stormwater runoff, with ultimate disposal in accordance with local, State and Federal requirements.

- Discharging contaminated groundwater produced by dewatering groundwater that has infiltrated into the construction site is prohibited. Discharging of contaminated soils via surface erosion is also prohibited.
- The Contractor is required to notify and obtain approval from the District ten (10) days prior to any non-stormwater discharge or dewatering associated with Contractor's construction activities.
- Construction sites shall be managed to minimize the exposure time of disturbed soil areas through phasing and scheduling of grading to the extent feasible and the use of temporary and permanent soil stabilization.
- BMPs shall be maintained at all times. In addition, BMPs shall be inspected prior to predicted storm events and following storm events.

29.4 PRD and Rain Event Action Plan (REAP) Amendments - If the scope or schedule of the project changes, the Contractor shall immediately notify the Engineer. The Engineer will determine if the Contractor will be required to recalculate the Risk Assessment. If it is determined by the Engineer that a new Risk Assessment is required, the Engineer will notify the Contractor to resubmit amended PRDs and in the case that the risk level increases, the Contractor shall comply with additional applicable requirements of the General Permit, including preparation and implementation of REAPs, M&RP, Numeric Action Level (NAL) Exceedance Reports, and annual reporting requirements. The Contractor shall also prepare amendments to the PRDs, both graphically and in narrative form, whenever there is a change in Contractor's construction activities or operations which may result in the discharge of pollutants to surface waters, groundwaters, municipal storm drain systems, or as deemed necessary by the Engineer. The Contractor shall also amend the PRDs if they are in violation of any condition of the General Permit, or has not effectively achieved the objective of reducing pollutants in stormwater discharges. Amendments shall show additional BMPs, revised Contractor's construction activities or operations, including those in areas not shown in the initially approved SWPPP, which are required on the project to effectively control water pollution.

Amendments to the PRDs shall be submitted for review and approval by the Engineer in the same manner specified for the initial approval of the PRDs. The Contractor shall date and attach all approved amendments to any of the PRDs. Upon approval of the amendment, the Contractor shall implement the approved changes, revised construction activities or operations.

29.5 Non-Compliance Reporting - If the project is in non-compliance at any time, the Contractor shall make a written report to the Engineer within two (2) calendar days of identification of non-compliance activities.

29.6 SWPPP Implementation - Upon approval of the SWPPP, the Contractor shall be responsible throughout the duration of the project for placing, installing, constructing, inspecting and maintaining the BMPs as well as conducting the M&RP as included in the SWPPP and any amendments thereto, and for removing and disposing of temporary BMPs. All SWPPP

implementation shall be performed or supervised by a QSP. Unless otherwise directed by the Engineer or specified in these Detailed Specifications, the Contractor's responsibility for SWPPP implementation shall continue throughout any temporary suspension of work ordered in accordance with Section 6.05, "TEMPORARY SUSPENSION OF THE WORK", of the General Provisions. Requirements for installation, construction, inspection, maintenance, removal and disposal of BMPs are specified in the CASQA Construction BMP Handbook Portal and these Detailed Specifications.

The Engineer may order the suspension of construction operations if the Contractor fails to comply with the requirements of this section, "Stormwater and Non-Stormwater Pollution Control", as determined by the Engineer.

The Contractor will not be compensated for sampling and analysis work because of the Contractor's failure to properly implement, inspect, maintain and repair BMPs in the approved SWPPP and any amendments thereto, or for failing to store construction materials or wastes in watertight containers.

(a) Stormwater Pollution Control - **The Contractor shall implement soil stabilization practices and sediment control BMPs, including minimum requirements as presented in the CASQA Construction BMP Handbook Portal, on all disturbed areas of the project site throughout the duration of the project.**

Implementation of soil stabilization practices and sediment control BMPs for soil-disturbed areas, including but not limited to, rough graded access roads, slopes, channel inverts, operational inlets and outlets of the project shall be completed prior to soil disturbance. The General Permit requires BMPs to be deployed throughout the duration of the project.

The Engineer may require the Contractor, on a case-by-case basis, to reduce the active, soil-disturbed area limit of the project. The Contractor shall demonstrate the ability and preparedness to fully deploy soil stabilization practices and sediment control BMPs to protect soil-disturbed areas of the project site by maintaining an adequate quantity of soil stabilization and sediment control materials onsite to protect exposed, soil-disturbed areas and a detailed plan for the mobilization of sufficient labor and equipment to fully deploy the required BMPs prior to the onset of precipitation and for the duration of the project.

Throughout the duration of the project, soil-disturbed areas of the project site shall be considered to be inactive whenever soil disturbing activities are expected to be discontinued for a period of fourteen (14) calendar days or more. Areas that will become inactive shall be fully protected with soil stabilization practices such as covering with mulch, temporary seeding, fiber rolls, blankets, etc., within ten (10) calendar days of the discontinuance of soil disturbing activities or two (2) calendar days prior to the onset of precipitation, whichever is first to occur. Areas that will become inactive shall be fully protected with sediment control

BMPs within ten (10) calendar days of the discontinuance of soil disturbing activities or two (2) calendar days prior to the onset of precipitation, whichever is first to occur.

Throughout the duration of the project, the project site shall be fully protected with soil stabilization practices and sediment control BMPs. The Contractor shall monitor the weather forecast on a daily basis. The National Weather Service forecast shall be used.

(b) Non-Stormwater Pollution Control - **The Contractor shall implement, year-round and throughout the duration of the project, BMPs included in the SWPPP for sediment tracking, wind erosion, non-stormwater management, and waste management and disposal.**

(c) Inspections and Reporting - The Contractor shall ensure that a QSP regularly inspects the construction site for BMPs identified in the SWPPP to ensure the proper implementation and functioning of BMPs. The QSP shall identify corrective actions and time frames to address any damaged BMPs or reinitiate any BMPs that have been discontinued. All repairs and design changes shall begin to be implemented within 72 hours of identification.

At a minimum, the Contractor shall inspect the construction site as follows:

1. Prior to a forecast storm;
2. After any precipitation which causes runoff capable of carrying sediment from the construction site;
3. At 24-hour intervals during extended precipitation events; and
4. At a regular interval of once every week.

The construction site inspection checklist provided in the CASQA SWPPP Template shall be used to ensure that the necessary BMPs are being properly implemented and are functioning adequately. The Contractor shall submit one copy of each site inspection record to the Engineer.

(d) Maintenance - The Contractor's QSP shall maintain construction site BMPs identified in the SWPPP to ensure the proper implementation and functioning of BMPs. If the QSP or the Engineer identifies a deficiency in the deployment or functioning of an identified BMP, the QSP shall begin implementing repairs or design changes within 72 hours of identification and complete as soon as possible. The correction of deficiencies shall be at no additional cost to the District.

(e) Training - The Contractor shall ensure that all persons responsible for implementing requirements of the General Permit shall be appropriately trained in accordance with Section VII "Training Qualifications and Certification Requirements" of the General Permit. Training should be both formal and informal, occur on an ongoing basis, and should include training offered by recognized governmental agencies or

professional organizations. All training shall be documented and included in the SWPPP as an appendix.

The Contractor shall ensure that SWPPPs are written, amended and certified by a QSD. The Contractor shall also ensure that all inspection, maintenance, repair and sampling activities shall be performed or supervised by a QSP. A QSP is a person responsible for non-stormwater and stormwater visual observations, sampling and analysis.

29.7 REAP - **The REAP is applicable to LUP Risk Level 2 construction sites only.** The Contractor shall ensure a QSP develop a REAP and submit a copy to the Engineer for review 48 hours prior to any likely precipitation event. The Contractor shall amend and implement the REAP as directed by the Engineer. If no comments are received prior to the precipitation event, the REAP shall be implemented as proposed. A likely precipitation event is any weather pattern that is forecast to have a 50% or greater probability of producing precipitation in the project area. The discharger shall ensure a QSP obtain a printed copy of the precipitation forecast information from the National Weather Service Forecast Office (e.g., enter the zip code of the project's location at http://www.srh.noaa.gov/forecast).

The Contractor's QSP shall ensure that the REAP include, at a minimum, the following site information:

a. Site Address

b. Calculated Risk Level

c. Site Stormwater Manager information including the name, company and 24-hour emergency telephone number

d. Erosion and Sediment Control Provider information including the name, company and 24-hour emergency telephone number

e. Stormwater Sampling Agent information including the name, company and 24-hour emergency telephone number

29.8 Water Quality Monitoring, Sampling and Analysis - **The Water Quality Monitoring, Sampling and Analysis is applicable to LUP Risk Level 2 construction sites only.** The Contractor's QSD shall be responsible for preparing an M&RP and implementing the monitoring, sampling and analysis requirements as described in Attachment A of the General Permit. Records of all visual observations and sampling results required by the General Permit shall be kept using the forms contained in Attachment 3 of the CASQA Construction BMP Handbook Portal. Copies of the forms shall be maintained in the SWPPP and submitted to the Engineer within 24 hours of the visual observation or sampling event.

29.9 NAL Exceedance Report - **The NAL Exceedance Report is applicable to LUP Risk Level 2 construction sites only.** The Contractor shall be responsible for submitting a NAL

Exceedance Report to the Engineer in the event that any effluent sample exceeds an applicable NAL.

a. The Contractor shall submit all storm event sampling results for each discharge point to the Engineer no later than 24 hours after the conclusion of the storm event.

b. The Contractor shall certify each NAL Exceedance Report in accordance with the Special Provisions for Construction Activity.

c. The Contractor shall retain an electronic or paper copy of each NAL Exceedance Report for a minimum of three (3) years after the date the annual report is filed.

d. The Contractor shall include in the NAL Exceedance Report:

i. The analytical method(s), method reporting unit(s) and method detection limit(s) of each analytical parameter (analytical results that are less than the method detection limit shall be reported as "less than the method detection limit").

ii. The date, place, time of sampling, visual observation (inspections) and/or measurements, including precipitation.

iii. A description of the current BMPs associated with the effluent sample that exceeded the NAL and the proposed corrective actions taken.

29.10 Non-Stormwater Discharge or Dewatering - **Dewatering activity should only be considered after other methods have been determined to be inadequate for storm drain construction by the Engineer.** If groundwater will be encountered during the project activities, the dewatering activity must be covered by the General Waste Discharge Requirements for Discharges to Surface Waters that Pose an Insignificant Threat to Water Quality (De Minimus Permit), Santa Ana Regional Water Quality Control Board Order No. R8-2015-0004. The Contractor shall comply with this Order, and notify and obtain approval from the Engineer fifteen (15) days prior to any non-stormwater discharging of groundwater dewatering. If an emergency or unforeseen dewatering activity that will discharge to Waters of the United States occurs, the Contractor shall contact the Engineer immediately.

When discharging groundwater from dewatering activities to surface waters, the Contractor shall comply with and implement the Monitoring and Reporting Program required under Order No. R8-2015-0004. This Order can be downloaded from http://www.waterboards.ca.gov/santaana/board_decisions/adopted_orders/orders/2015_orders.shtml. Under the Monitoring and Reporting Program, the Contractor shall prepare the monitoring report in accordance with Attachment E of the Order. The Contractor must submit the Monitoring Reports to the Engineer by the 15th day of each month following the monitoring period. The District will submit the Monitoring Reports to the Santa Ana Regional Water Quality Control Board. The Monitoring Reports shall cover the previous month's monitoring activities.

If there is any other form of non-stormwater discharge from the project to surface waters, the Contractor shall immediately contact the Engineer to determine appropriate actions required for coverage under the De Minimus Permit.

Failure of the Contractor to fully comply with this requirement may result in the suspension of construction operations and liability for any associated monitoring, fines, penalties and remediation activities related to the discharge.

29.11 Reports -

(a) Annual Report - The Contractor shall be responsible for preparing an Annual Report to meet the requirements of Section XVI of the General Permit covering the preceding period of construction from July 1st to June 30th. The Annual Report shall be structured in accordance with the CASQA Construction BMP Handbook Portal Section 1.7. The Contractor shall submit two (2) copies of the Annual Report to the Engineer by July 15th of each year for review and approval. The Contractor shall allow ten (10) working days for the Engineer to review the Annual Report. If revisions are required as determined by the Engineer, the Contractor shall revise and resubmit the Annual Report within three (3) working days of receipt of the Engineer's comments. The Contractor shall submit four (4) copies of the approved Annual Report to the Engineer prior to August 15th of each year. **The Contractor shall be responsible for providing an Annual Report to the Engineer for any construction occurring for part of the year after July 1st prior to receiving final payment on the project.**

(b) Monthly Report - The Contractor shall prepare and submit to the Engineer a Monthly Report within five (5) working days of the end of the month including:

1. All visual observation reports;
2. All sampling and analysis reports;
3. All NAL Exceedance Reports; and
4. Summary of changes to the SWPPP and or REAP based on inspection results for the preceding month.

29.12 Payment - The contract lump sum price paid for Stormwater and Non-Stormwater Pollution Control work shall include full compensation for furnishing all labor, materials, tools, equipment and incidentals for doing all the work involved in developing, preparing, obtaining approval of, revising and amending the PRDs, and installing, constructing, maintaining, removing and disposing of BMPs as shown in the SWPPP, as specified in the CASQA Handbook, General Permit and these Detailed Specifications, and as directed by the Engineer.

The contract lump sum price paid for Non-Stormwater Discharge or Dewatering shall include full compensation for compliance of Section 29.10, Non-Stormwater Discharge or Dewatering. **Contractor shall not be paid any portion of the contract lump sum if coverage under the De Minimus Permit is not required.**

Monthly payment will be made on a basis of the percentage of work completed on the entire project and subject to the submittal of a complete Monthly Report as specified in Section 29.11(b). Failure to complete or report required visual inspections, monitoring, sampling and analysis requirements, NAL Exceedance Reports, and/or other necessary follow-up actions to ensure that the project stays in compliance with the General Permit can be the basis for reducing monthly progress payments for the project. Monthly progress payments will be reduced by the amount of direct costs, overhead costs and engineering costs incurred by the Engineer to address compliance deficiencies, including costs to conduct inspections, monitoring, reporting and supplemental BMP implementation necessary to comply with the General Permit and costs incurred by the Engineer to address complaints, additional State inspections and violations and/or fines issued by the State or USEPA associated with failure to properly comply with the General Permit. Progress payment reductions can exceed the monthly percentage or total contract lump sum price for Stormwater and Non-Stormwater Pollution Control work.

Payment will be made on a basis of the percentage of work completed on the entire project.

SECTION 30 - UTILITIES

30.1 Description - This section covers the contract items Maiden Lane Waterline Relocation; and EVMWD Waterline Relocations as shown on EVMWD Water Improvement Plan W1 through W5.

30.2 Maiden Lane Waterline Relocation; and EVMWD Waterline Relocations - The contract items Maiden Lane Waterline Relocation; and EVMWD Waterline Relocations include all labor, equipment, materials, earthwork, testing, dewatering, disinfection and incidentals required to safely remove and relocate Elsinore Valley Municipal Water District (EVMWD) waterlines as shown on Sheets W1 through W5 of the drawings prepared by K&A Engineering, Inc. on behalf of EVMWD. The contract items Maiden Lane Waterline Relocation; and EVMWD Waterline Relocations shall be performed in accordance with EVMWD's Standard Specifications (see available copy in Appendix "H") and New Water Main Chlorination and Bacteriological Testing Protocol (see Appendix "I").

The Contractor is required to closely coordinate and cooperate with EVMWD to ensure that the work proceeds in an orderly manner and that the waterline is out of service for a minimum period of time.

All excavations and work areas shall be properly signed, lighted, supervised by flag men and barricaded in accordance with County standards, and temporary access and/or ramping shall be provided to adjacent property owners' driveways until the waterline relocations are complete. The traffic control work associated with these waterline relocations shall be in accordance with industry standards and the latest edition of the Manual on Uniform Traffic Control Devices (MUTCD) or as deemed necessary by EVMWD's inspector or the District's inspector.

All materials proposed to be used by the Contractor for the construction of such relocations shall be submitted for review and approval to EVMWD and the District.

The Contractor shall notify EVMWD Engineering Services, 951.674.3146 ext. 8402, inspections@evmwd.net, in writing at least two working days before any relocation work is started.

30.3 Measurement and Payment - The contract lump sum prices paid for Maiden Lane Waterline Relocation; and EVMWD Waterline Relocations shall include full compensation for all costs incurred under this section except that Aggregate Base and Hot Mix Asphalt used for resurfacing or constructing new road will be measured and paid for under contract items Aggregate Base, Class 2 and Hot Mix Asphalt.

No separate payment will be made for providing access to property owners' driveways during the relocation work or for traffic control work related to the waterline relocations. All costs associated with the latter mentioned items shall be included in the contract lump sum price for each waterline relocation.

Successful bidder shall submit a **"Schedule of Values"** breakdown for the contract items Maiden Lane Waterline Relocation; and EVMWD Waterline Relocations within 14 days of Notice of Intent to Award. Contractor submittal for **"Schedule of Values"** breakdown shall utilize Form 1, Appendix "J" for the Maiden Lane Waterline Relocation and Form 2, Appendix "K" for the EVMWD Waterline Relocations. This payment will be made on a basis of the percentage of work completed as listed in the approved **"Schedule of Values"** breakdown for each submittal.

SECTION 31 - PRECAST REINFORCED CONCRETE BOX

31.1 Description - This section includes the contract items 6'W x 7'H Precast Reinforced Concrete Box (PRCB); and 5'W x 8'H Precast Reinforced Concrete Box (PRCB) as required for the work.

31.2 General Requirements - This specification covers single-cell Precast Reinforced Concrete Box (PRCB) sections, the span, rise, soil weight and design earth cover shall be as shown on the plans. The Contractor shall follow Sections 216 and 306-10 of the Greenbook Specifications except for Section 216-1 Materials and Section 216-3 Fabrication, which shall be as noted in the following sections.

31.3 Materials - The materials used for PRCB shall comply with Section 51-4.02 and Section 94-4.02 of the Caltrans Specifications except as follows: all concrete for PRCB shall have a compressive strength of 6,000 psi minimum and conform to Section 16 of these Detailed Specifications.

Reinforcing steel shall conform to Section 52 of the Caltrans Specifications.

A four (4) inch minimum layer of Filter Material shall be placed under the PRCB per District Standard Drawing M815. Filter Material shall be installed, measured and paid for as described in Section 14.14 of these Detailed Specifications.

31.4 PRCB Shop Drawings, Calculations, and Layout Diagrams - PRCB Shop Drawings and Layout Diagrams shall be prepared and submitted in accordance with the Greenbook Specifications, with the following additions.

The specified PRCB dimensions for this project are non-standard and will require modifications in wall thicknesses, cover over steel and reinforcement by the manufacturer. The Contractor must request from the manufacturer to provide engineering calculations for the modified PRCB sections. Supporting engineering calculations for the modified PRCB shall be prepared by a California Registered Civil Engineer and submitted to the Engineer for approval prior to the pre-construction meeting and in accordance with Section 3-8.1 of the Greenbook Specifications.

Shop Drawings shall show the necessary details of all reinforcing steel and lifting devices and locations for all PRCB sections.

The Contractor must also provide engineered special designs for all PRCB sections that incorporate openings for manholes and junction structures not already detailed on the plans. Shop Drawings and supporting engineering calculations for these specially designed sections shall be prepared by a California Registered Civil Engineer and submitted to the Engineer for approval prior to the pre-construction meeting and in accordance with Section 3-8.1 of the Greenbook Specifications. No manufacturing of any specially designed PRCB sections will be allowed prior to the approval of the Shop Drawings.

The Shop Drawings and PRCB Layout Diagrams must explicitly identify which joints are beveled and the 'drop' dimension for each.

31.5 Fabrication - The Fabrication for the PRCB shall conform to Section 51-4.02D(5) of the Caltrans Specifications with the following exceptions:

Reinforcement placement shall conform to the details shown on the plans or standard plans except that the minimum cover of concrete over the reinforcement for the invert is three and one-half (3 1/2) inches total.

All splices or laps must be tied.

Reinforcement for precast reinforced concrete boxes may be welded wire reinforcement.

PRCB sections shall be fabricated with one end beveled where the curves, grade breaks or angle points shown on the drawings would otherwise result in a clear space greater than 1 inch measured at the extreme ends. Beveled sections must be identified on the Shop Drawings and PRCB Layout Diagrams.

The interior surface of the PRCB shall be smooth and well finished. The manufacturer may be required to provide a representative section to be used to determine the acceptable finish by the Engineer.

31.6 Basis of Acceptance - The basis of acceptance of PRCB shall be dependent on whether the plant fabricating the PRCB sections is currently certified on the Caltrans Authorized Facility Audit List for Structural Precast Concrete, (https://mets.dot.ca.gov/afl/AuditedFacilitiesList.php?afl=1) as follows:

a) If the PRCB Manufacturing Plant is NOT certified on Caltrans Authorized Facility Audit List:

The basis of acceptance shall be full compliance with these Specifications demonstrated through Contractor-supplied third party inspections and verification in accordance with Section 31.7 of these Detailed Specifications.

b) If PRCB Manufacturing Plant IS certified on Caltrans Authorized Facility Audit List:

The basis of acceptance shall be provision of a Certificate of Compliance conforming to Section 4-5 of the Greenbook Specifications from the certified manufacturing plant **BEFORE** any PRCB is ordered or fabricated. The Contractor shall supply documentation to the satisfaction of the Engineer, that the plant is currently certified on the Caltrans Authorized Facility Audit List.

Either acceptance, however, shall be considered a tentative acceptance. Final acceptance will only be made when the work is completed.

31.7 Contractor Supplied Third-Party Inspection of PRCB Plant - If the PRCB is fabricated at a plant that is NOT currently certified on the Caltrans Authorized Facility Audit List, the Contractor, at its expense, shall engage a Qualified Inspector or Accredited Testing Laboratory to inspect the materials, equipment and manufacture of the PRCB.

The PRCB inspections shall be conducted for every 400 feet or 50 units and shall include cage manufacturing, curing processes, batching equipment and process, aggregate and cement storage, concrete mix designs and product handling.

The Qualified Inspector or Accredited Testing Laboratory shall be approved by the Engineer and:

1. Either be registered as a Civil Engineer in the State of California or have a current Plant Quality Personnel Certification, Level II from the Precast/Prestressed Concrete Institute; and
2. Be a subcontractor providing only quality control inspection services; and
3. The Inspector or Accredited Testing Laboratory must not be affiliated with, employed or compensated by any material provider, the PRCB manufacturer, or any other subcontractor providing other services or materials for this project.

The Inspection Reports to be submitted to the Engineer shall include, at a minimum:

1. Plant location;
2. Names of all inspectors and the specific inspections they performed that day;
3. Verification of compliance with these contract documents for every 400 feet or 50 units;
4. Any problems or deficiencies discovered;
5. Any testing or repair work performed; and
6. Daily production reports.

The Third-Party Inspector shall forward all daily reports to the Engineer on a weekly basis. Any problems or deficiencies discovered shall be immediately reported to the PRCB manufacturer and to the Engineer. Deficiencies shall be corrected to the satisfaction of the Engineer, or the affected products must be replaced at no cost to the District.

31.8 Installation of PRCB - The installation of PRCB shall comply with Section 306-10 of the Greenbook Specifications, except as follows:

Earthwork shall conform to Section 14 of these Detailed Specifications and the paylines shown on the drawings.

Filter Material shall be used in place of Leveling Bed Material. Filter Material shall be installed, measured and paid for as described in Section 14 of these Detailed Specifications, within the paylines shown on the drawings.

The finishing of joints shall be in accordance with Section 306-10.6 of the Greenbook Specifications with the exception that preformed flexible joint sealant shall NOT be used to fill the joint annular space on the inside of the PRCB Section. The interior annular space of all joints shall be filled with concrete or mortar as otherwise required per the Greenbook Specifications, and troweled smooth so that the PRCB will form a continuous conduit with a smooth uniform interior surface. Tongue and groove ends of the PRCB shall be free from any deleterious substance or condition, which might prevent a satisfactory mortar at the joint.

External Sealing Bands shall be installed on top of the PRCB joints as shown on the Greenbook Specifications.

31.9 6'W x 7'H Precast Reinforced Concrete Box (PRCB) - The contract item 6'W x 7'H Precast Reinforced Concrete Box (PRCB) covers the complete furnishing and installation of the 6'W x 7'H PRCB as specified, exclusive of Earthwork and Filter Material.

31.10 5'W x 8'H Precast Reinforced Concrete Box (PRCB) - The contract item 5'W x 8'H Precast Reinforced Concrete Box (PRCB) covers the complete furnishing and installation of the x 8'H PRCB as specified, exclusive of Earthwork and Filter Material

31.11 Measurement - Measurement for payment of the contract item 6'W x 7'H Precast Reinforced Concrete Box (PRCB); and 5'W x 8'H Precast Reinforced Concrete Box (PRCB) will be the number of lineal feet of each size installed as specified measured along the centerline of the box in place including curves.

31.12 Payment - The contract prices paid for the 6'W x 7'H Precast Reinforced Concrete Box (PRCB); and 5'W x 8'H Precast Reinforced Concrete Box (PRCB) shall include full compensation for all costs incurred under this section.

APPENDIX "A"

SOUTH COAST AIR QUALITY MANAGEMENT DISTRICT

RULE 403

(Adopted May 7, 1976) (Amended November 6, 1992)
(Amended July 9, 1993) (Amended February 14, 1997)
(Amended December 11, 1998)(Amended April 2, 2004)
(Amended June 3, 2005)

RULE 403. FUGITIVE DUST

(a) Purpose

The purpose of this Rule is to reduce the amount of particulate matter entrained in the ambient air as a result of anthropogenic (man-made) fugitive dust sources by requiring actions to prevent, reduce or mitigate fugitive dust emissions.

(b) Applicability

The provisions of this Rule shall apply to any activity or man-made condition capable of generating fugitive dust.

(c) Definitions

(1) ACTIVE OPERATIONS means any source capable of generating fugitive dust, including, but not limited to, earth-moving activities, construction/demolition activities, disturbed surface area, or heavy- and light-duty vehicular movement.

(2) AGGREGATE-RELATED PLANTS are defined as facilities that produce and / or mix sand and gravel and crushed stone.

(3) AGRICULTURAL HANDBOOK means the region-specific guidance document that has been approved by the Governing Board or hereafter approved by the Executive Officer and the U.S. EPA. For the South Coast Air Basin, the Board-approved region-specific guidance document is the Rule 403 Agricultural Handbook dated December 1998. For the Coachella Valley, the Board-approved region-specific guidance document is the Rule 403 Coachella Valley Agricultural Handbook dated April 2, 2004.

(4) ANEMOMETERS are devices used to measure wind speed and direction in accordance with the performance standards, and maintenance and calibration criteria as contained in the most recent Rule 403 Implementation Handbook.

(5) BEST AVAILABLE CONTROL MEASURES means fugitive dust control actions that are set forth in Table 1 of this Rule.

(6) BULK MATERIAL is sand, gravel, soil, aggregate material less than two inches in length or diameter, and other organic or inorganic particulate matter.

(7) CEMENT MANUFACTURING FACILITY is any facility that has a cement kiln at the facility.

(8) CHEMICAL STABILIZERS are any non-toxic chemical dust suppressant which must not be used if prohibited for use by the Regional Water Quality Control Boards, the California Air Resources Board, the U.S. Environmental Protection Agency (U.S. EPA), or any applicable law, rule or regulation. The chemical stabilizers shall meet any specifications, criteria, or tests required by any federal, state, or local water agency. Unless otherwise indicated, the use of a non-toxic chemical stabilizer shall be of sufficient concentration and application frequency to maintain a stabilized surface.

(9) COMMERCIAL POULTRY RANCH means any building, structure, enclosure, or premises where more than 100 fowl are kept or maintained for the primary purpose of producing eggs or meat for sale or other distribution.

(10) CONFINED ANIMAL FACILITY means a source or group of sources of air pollution at an agricultural source for the raising of 3,360 or more fowl or 50 or more animals, including but not limited to, any structure, building, installation, farm, corral, coop, feed storage area, milking parlor, or system for the collection, storage, or distribution of solid and liquid manure; if domesticated animals, including horses, sheep, goats, swine, beef cattle, rabbits, chickens, turkeys, or ducks are corralled, penned, or otherwise caused to remain in restricted areas for commercial agricultural purposes and feeding is by means other than grazing.

(11) CONSTRUCTION/DEMOLITION ACTIVITIES means any on-site mechanical activities conducted in preparation of, or related to, the building, alteration, rehabilitation, demolition or improvement of property, including, but not limited to the following activities: grading, excavation, loading, crushing, cutting, planing, shaping or ground breaking.

(12) CONTRACTOR means any person who has a contractual arrangement to conduct an active operation for another person.

(13) DAIRY FARM is an operation on a property, or set of properties that are contiguous or separated only by a public right-of-way, that raises cows or

produces milk from cows for the purpose of making a profit or for a livelihood. Heifer and calf farms are dairy farms.

(14) DISTURBED SURFACE AREA means a portion of the earth's surface which has been physically moved, uncovered, destabilized, or otherwise modified from its undisturbed natural soil condition, thereby increasing the potential for emission of fugitive dust. This definition excludes those areas which have:

(A) been restored to a natural state, such that the vegetative ground cover and soil characteristics are similar to adjacent or nearby natural conditions;

(B) been paved or otherwise covered by a permanent structure; or

(C) sustained a vegetative ground cover of at least 70 percent of the native cover for a particular area for at least 30 days.

(15) DUST SUPPRESSANTS are water, hygroscopic materials, or non-toxic chemical stabilizers used as a treatment material to reduce fugitive dust emissions.

(16) EARTH-MOVING ACTIVITIES means the use of any equipment for any activity where soil is being moved or uncovered, and shall include, but not be limited to the following: grading, earth cutting and filling operations, loading or unloading of dirt or bulk materials, adding to or removing from open storage piles of bulk materials, landfill operations, weed abatement through disking, and soil mulching.

(17) DUST CONTROL SUPERVISOR means a person with the authority to expeditiously employ sufficient dust mitigation measures to ensure compliance with all Rule 403 requirements at an active operation.

(18) FUGITIVE DUST means any solid particulate matter that becomes airborne, other than that emitted from an exhaust stack, directly or indirectly as a result of the activities of any person.

(19) HIGH WIND CONDITIONS means that instantaneous wind speeds exceed 25 miles per hour.

(20) INACTIVE DISTURBED SURFACE AREA means any disturbed surface area upon which active operations have not occurred or are not expected to occur for a period of 20 consecutive days.

(21) LARGE OPERATIONS means any active operations on property which contains 50 or more acres of disturbed surface area; or any earth-moving operation with a daily earth-moving or throughput volume of 3,850 cubic

meters (5,000 cubic yards) or more three times during the most recent 365-day period.

(22) OPEN STORAGE PILE is any accumulation of bulk material, which is not fully enclosed, covered or chemically stabilized, and which attains a height of three feet or more and a total surface area of 150 or more square feet.

(23) PARTICULATE MATTER means any material, except uncombined water, which exists in a finely divided form as a liquid or solid at standard conditions.

(24) PAVED ROAD means a public or private improved street, highway, alley, public way, or easement that is covered by typical roadway materials, but excluding access roadways that connect a facility with a public paved roadway and are not open to through traffic. Public paved roads are those open to public access and that are owned by any federal, state, county, municipal or any other governmental or quasi-governmental agencies. Private paved roads are any paved roads not defined as public.

(25) PM_{10} means particulate matter with an aerodynamic diameter smaller than or equal to 10 microns as measured by the applicable State and Federal reference test methods.

(26) PROPERTY LINE means the boundaries of an area in which either a person causing the emission or a person allowing the emission has the legal use or possession of the property. Where such property is divided into one or more sub-tenancies, the property line(s) shall refer to the boundaries dividing the areas of all sub-tenancies.

(27) RULE 403 IMPLEMENTATION HANDBOOK means a guidance document that has been approved by the Governing Board on April 2, 2004 or hereafter approved by the Executive Officer and the U.S. EPA.

(28) SERVICE ROADS are paved or unpaved roads that are used by one or more public agencies for inspection or maintenance of infrastructure and which are not typically used for construction-related activity.

(29) SIMULTANEOUS SAMPLING means the operation of two PM_{10} samplers in such a manner that one sampler is started within five minutes of the other, and each sampler is operated for a consecutive period which must be not less than 290 minutes and not more than 310 minutes.

(30) SOUTH COAST AIR BASIN means the non-desert portions of Los Angeles, Riverside, and San Bernardino counties and all of Orange

County as defined in California Code of Regulations, Title 17, Section 60104. The area is bounded on the west by the Pacific Ocean, on the north and east by the San Gabriel, San Bernardino, and San Jacinto Mountains, and on the south by the San Diego county line.

(31) STABILIZED SURFACE means any previously disturbed surface area or open storage pile which, through the application of dust suppressants, shows visual or other evidence of surface crusting and is resistant to wind-driven fugitive dust and is demonstrated to be stabilized. Stabilization can be demonstrated by one or more of the applicable test methods contained in the Rule 403 Implementation Handbook.

(32) TRACK-OUT means any bulk material that adheres to and agglomerates on the exterior surface of motor vehicles, haul trucks, and equipment (including tires) that have been released onto a paved road and can be removed by a vacuum sweeper or a broom sweeper under normal operating conditions.

(33) TYPICAL ROADWAY MATERIALS means concrete, asphaltic concrete, recycled asphalt, asphalt, or any other material of equivalent performance as determined by the Executive Officer, and the U.S. EPA.

(34) UNPAVED ROADS means any unsealed or unpaved roads, equipment paths, or travel ways that are not covered by typical roadway materials. Public unpaved roads are any unpaved roadway owned by federal, state, county, municipal or other governmental or quasi-governmental agencies. Private unpaved roads are all other unpaved roadways not defined as public.

(35) VISIBLE ROADWAY DUST means any sand, soil, dirt, or other solid particulate matter which is visible upon paved road surfaces and which can be removed by a vacuum sweeper or a broom sweeper under normal operating conditions.

(36) WIND-DRIVEN FUGITIVE DUST means visible emissions from any disturbed surface area which is generated by wind action alone.

(37) WIND GUST is the maximum instantaneous wind speed as measured by an anemometer.

(d) Requirements

(1) No person shall cause or allow the emissions of fugitive dust from any active operation, open storage pile, or disturbed surface area such that:

(A) the dust remains visible in the atmosphere beyond the property line of the emission source; or

(B) the dust emission exceeds 20 percent opacity (as determined by the appropriate test method included in the Rule 403 Implementation Handbook), if the dust emission is the result of movement of a motorized vehicle.

(2) No person shall conduct active operations without utilizing the applicable best available control measures included in Table 1 of this Rule to minimize fugitive dust emissions from each fugitive dust source type within the active operation.

(3) No person shall cause or allow PM_{10} levels to exceed 50 micrograms per cubic meter when determined, by simultaneous sampling, as the difference between upwind and downwind samples collected on high-volume particulate matter samplers or other U.S. EPA-approved equivalent method for PM_{10} monitoring. If sampling is conducted, samplers shall be:

(A) Operated, maintained, and calibrated in accordance with 40 Code of Federal Regulations (CFR), Part 50, Appendix J, or appropriate U.S. EPA-published documents for U.S. EPA-approved equivalent method(s) for PM_{10}.

(B) Reasonably placed upwind and downwind of key activity areas and as close to the property line as feasible, such that other sources of fugitive dust between the sampler and the property line are minimized.

(4) No person shall allow track-out to extend 25 feet or more in cumulative length from the point of origin from an active operation. Notwithstanding the preceding, all track-out from an active operation shall be removed at the conclusion of each workday or evening shift.

(5) No person shall conduct an active operation with a disturbed surface area of five or more acres, or with a daily import or export of 100 cubic yards or more of bulk material without utilizing at least one of the measures listed in subparagraphs (d)(5)(A) through (d)(5)(E) at each vehicle egress from the site to a paved public road.

(A) Install a pad consisting of washed gravel (minimum-size: one inch) maintained in a clean condition to a depth of at least six inches and extending at least 30 feet wide and at least 50 feet long.

(B) Pave the surface extending at least 100 feet and at least 20 feet wide.

(C) Utilize a wheel shaker/wheel spreading device consisting of raised dividers (rails, pipe, or grates) at least 24 feet long and 10 feet wide to remove bulk material from tires and vehicle undercarriages before vehicles exit the site.

(D) Install and utilize a wheel washing system to remove bulk material from tires and vehicle undercarriages before vehicles exit the site.

(E) Any other control measures approved by the Executive Officer and the U.S. EPA as equivalent to the actions specified in subparagraphs (d)(5)(A) through (d)(5)(D).

(6) Beginning January 1, 2006, any person who operates or authorizes the operation of a confined animal facility subject to this Rule shall implement the applicable conservation management practices specified in Table 4 of this Rule.

(e) Additional Requirements for Large Operations

(1) Any person who conducts or authorizes the conducting of a large operation subject to this Rule shall implement the applicable actions specified in Table 2 of this Rule at all times and shall implement the applicable actions specified in Table 3 of this Rule when the applicable performance standards can not be met through use of Table 2 actions; and shall:

(A) submit a fully executed Large Operation Notification (Form 403 N) to the Executive Officer within 7 days of qualifying as a large operation;

(B) include, as part of the notification, the name(s), address(es), and phone number(s) of the person(s) responsible for the submittal, and a description of the operation(s), including a map depicting the location of the site;

(C) maintain daily records to document the specific dust control actions taken, maintain such records for a period of not less than three years; and make such records available to the Executive Officer upon request;

(D) install and maintain project signage with project contact signage that meets the minimum standards of the Rule 403 Implementation Handbook, prior to initiating any earthmoving activities;

(E) identify a dust control supervisor that:

(i) is employed by or contracted with the property owner or developer;

(ii) is on the site or available on-site within 30 minutes during working hours;

(iii) has the authority to expeditiously employ sufficient dust mitigation measures to ensure compliance with all Rule requirements;

(iv) has completed the AQMD Fugitive Dust Control Class and has been issued a valid Certificate of Completion for the class; and

(F) notify the Executive Officer in writing within 30 days after the site no longer qualifies as a large operation as defined by paragraph (c)(18).

(2) Any Large Operation Notification submitted to the Executive Officer or AQMD-approved dust control plan shall be valid for a period of one year from the date of written acceptance by the Executive Officer. Any Large Operation Notification accepted pursuant to paragraph (e)(1), excluding those submitted by aggregate-related plants and cement manufacturing facilities must be resubmitted annually by the person who conducts or authorizes the conducting of a large operation, at least 30 days prior to the expiration date, or the submittal shall no longer be valid as of the expiration date. If all fugitive dust sources and corresponding control measures or special circumstances remain identical to those identified in the previously accepted submittal or in an AQMD-approved dust control plan, the resubmittal may be a simple statement of no-change (Form 403NC).

(f) Compliance Schedule

The newly amended provisions of this Rule shall become effective upon adoption. Pursuant to subdivision (e), any existing site that qualifies as a large operation will have 60 days from the date of Rule adoption to comply with the notification and recordkeeping requirements for large operations. Any Large Operation

Notification or AQMD-approved dust control plan which has been accepted prior to the date of adoption of these amendments shall remain in effect and the Large Operation Notification or AQMD-approved dust control plan annual resubmittal date shall be one year from adoption of this Rule amendment.

(g) Exemptions

(1) The provisions of this Rule shall not apply to:

(A) Dairy farms.

(B) Confined animal facilities provided that the combined disturbed surface area within one continuous property line is one acre or less.

(C) Agricultural vegetative crop operations provided that the combined disturbed surface area within one continuous property line and not separated by a paved public road is 10 acres or less.

(D) Agricultural vegetative crop operations within the South Coast Air Basin, whose combined disturbed surface area includes more than 10 acres provided that the person responsible for such operations:

(i) voluntarily implements the conservation management practices contained in the Rule 403 Agricultural Handbook;

(ii) completes and maintains the self-monitoring form documenting sufficient conservation management practices, as described in the Rule 403 Agricultural Handbook; and

(iii) makes the completed self-monitoring form available to the Executive Officer upon request.

(E) Agricultural vegetative crop operations outside the South Coast Air Basin whose combined disturbed surface area includes more than 10 acres provided that the person responsible for such operations:

(i) voluntarily implements the conservation management practices contained in the Rule 403 Coachella Valley Agricultural Handbook; and

(ii) completes and maintains the self-monitoring form documenting sufficient conservation management practices, as described in the Rule 403 Coachella Valley Agricultural Handbook; and

(iii) makes the completed self-monitoring form available to the Executive Officer upon request.

(F) Active operations conducted during emergency life-threatening situations, or in conjunction with any officially declared disaster or state of emergency.

(G) Active operations conducted by essential service utilities to provide electricity, natural gas, telephone, water and sewer during periods of service outages and emergency disruptions.

(H) Any contractor subsequent to the time the contract ends, provided that such contractor implemented the required control measures during the contractual period.

(I) Any grading contractor, for a phase of active operations, subsequent to the contractual completion of that phase of earth-moving activities, provided that the required control measures have been implemented during the entire phase of earth-moving activities, through and including five days after the final grading inspection.

(J) Weed abatement operations ordered by a county agricultural commissioner or any state, county, or municipal fire department, provided that:

(i) mowing, cutting or other similar process is used which maintains weed stubble at least three inches above the soil; and

(ii) any discing or similar operation which cuts into and disturbs the soil, where watering is used prior to initiation of these activities, and a determination is made by the agency issuing the weed abatement order that, due to fire hazard conditions, rocks, or other physical obstructions, it is not practical to meet the conditions specified in clause (g)(1)(H)(i). The provisions this clause shall not exempt the owner of any property from stabilizing, in accordance with paragraph (d)(2), disturbed surface areas which have been created as a result of the weed abatement actions.

(K) sandblasting operations.

(2) The provisions of paragraphs (d)(1) and (d)(3) shall not apply:

(A) When wind gusts exceed 25 miles per hour, provided that:

(i) The required Table 3 contingency measures in this Rule are implemented for each applicable fugitive dust source type, and;

(ii) records are maintained in accordance with subparagraph (e)(1)(C).

(B) To unpaved roads, provided such roads:

(i) are used solely for the maintenance of wind-generating equipment; or

(ii) are unpaved public alleys as defined in Rule 1186; or

(iii) are service roads that meet all of the following criteria:

(a) are less than 50 feet in width at all points along the road;

(b) are within 25 feet of the property line; and

(c) have a traffic volume less than 20 vehicle-trips per day.

(C) To any active operation, open storage pile, or disturbed surface area for which necessary fugitive dust preventive or mitigative actions are in conflict with the federal Endangered Species Act, as determined in writing by the State or federal agency responsible for making such determinations.

(3) The provisions of (d)(2) shall not apply to any aggregate-related plant or cement manufacturing facility that implements the applicable actions specified in Table 2 of this Rule at all times and shall implement the applicable actions specified in Table 3 of this Rule when the applicable performance standards of paragraphs (d)(1) and (d)(3) can not be met through use of Table 2 actions.

(4) The provisions of paragraphs (d)(1), (d)(2), and (d)(3) shall not apply to:

(A) Blasting operations which have been permitted by the California Division of Industrial Safety; and

(B) Motion picture, television, and video production activities when dust emissions are required for visual effects. In order to obtain this exemption, the Executive Officer must receive notification in writing at least 72 hours in advance of any such activity and no nuisance results from such activity.

(5) The provisions of paragraph (d)(3) shall not apply if the dust control actions, as specified in Table 2, are implemented on a routine basis for

each applicable fugitive dust source type. To qualify for this exemption, a person must maintain records in accordance with subparagraph (e)(1)(C).

(6) The provisions of paragraph (d)(4) shall not apply to earth coverings of public paved roadways where such coverings are approved by a local government agency for the protection of the roadway, and where such coverings are used as roadway crossings for haul vehicles provided that such roadway is closed to through traffic and visible roadway dust is removed within one day following the cessation of activities.

(7) The provisions of subdivision (e) shall not apply to:

(A) officially-designated public parks and recreational areas, including national parks, national monuments, national forests, state parks, state recreational areas, and county regional parks.

(B) any large operation which is required to submit a dust control plan to any city or county government which has adopted a District-approved dust control ordinance.

(C) any large operation subject to Rule 1158, which has an approved dust control plan pursuant to Rule 1158, provided that all sources of fugitive dust are included in the Rule 1158 plan.

(8) The provisions of subparagraph (e)(1)(A) through (e)(1)(C) shall not apply to any large operation with an AQMD-approved fugitive dust control plan provided that there is no change to the sources and controls as identified in the AQMD-approved fugitive dust control plan.

(h) Fees

Any person conducting active operations for which the Executive Officer conducts upwind/downwind monitoring for PM_{10} pursuant to paragraph (d)(3) shall be assessed applicable Ambient Air Analysis Fees pursuant to Rule 304.1. Applicable fees shall be waived for any facility which is exempted from paragraph (d)(3) or meets the requirements of paragraph (d)(3).

TABLE 1
BEST AVAILABLE CONTROL MEASURES
(Applicable to All Construction Activity Sources)

Source Category	Control Measure	Guidance
Backfilling	01-1 Stabilize backfill material when not actively handling; and 01-2 Stabilize backfill material during handling; and 01-3 Stabilize soil at completion of activity.	✓ Mix backfill soil with water prior to moving ✓ Dedicate water truck or high capacity hose to backfilling equipment ✓ Empty loader bucket slowly so that no dust plumes are generated ✓ Minimize drop height from loader bucket
Clearing and grubbing	02-1 Maintain stability of soil through pre-watering of site prior to clearing and grubbing; and 02-2 Stabilize soil during clearing and grubbing activities; and 02-3 Stabilize soil immediately after clearing and grubbing activities.	✓ Maintain live perennial vegetation where possible ✓ Apply water in sufficient quantity to prevent generation of dust plumes
Clearing forms	03-1 Use water spray to clear forms; or 03-2 Use sweeping and water spray to clear forms; or 03-3 Use vacuum system to clear forms.	✓ Use of high pressure air to clear forms may cause exceedance of Rule requirements
Crushing	04-1 Stabilize surface soils prior to operation of support equipment; and 04-2 Stabilize material after crushing.	✓ Follow permit conditions for crushing equipment ✓ Pre-water material prior to loading into crusher ✓ Monitor crusher emissions opacity ✓ Apply water to crushed material to prevent dust plumes

TABLE 1
BEST AVAILABLE CONTROL MEASURES
(Applicable to All Construction Activity Sources)

Source Category	Control Measure	Guidance
Cut and fill	05-1 Pre-water soils prior to cut and fill activities; and 05-2 Stabilize soil during and after cut and fill activities.	✓ For large sites, pre-water with sprinklers or water trucks and allow time for penetration ✓ Use water trucks/pulls to water soils to depth of cut prior to subsequent cuts
Demolition – mechanical/manual	06-1 Stabilize wind erodible surfaces to reduce dust; and 06-2 Stabilize surface soil where support equipment and vehicles will operate; and 06-3 Stabilize loose soil and demolition debris; and 06-4 Comply with AQMD Rule 1403.	✓ Apply water in sufficient quantities to prevent the generation of visible dust plumes
Disturbed soil	07-1 Stabilize disturbed soil throughout the construction site; and 07-2 Stabilize disturbed soil between structures	✓ Limit vehicular traffic and disturbances on soils where possible ✓ If interior block walls are planned, install as early as possible ✓ Apply water or a stabilizing agent in sufficient quantities to prevent the generation of visible dust plumes
Earth-moving activities	08-1 Pre-apply water to depth of proposed cuts; and 08-2 Re-apply water as necessary to maintain soils in a damp condition and to ensure that visible emissions do not exceed 100 feet in any direction; and 08-3 Stabilize soils once earth-moving activities are complete.	✓ Grade each project phase separately, timed to coincide with construction phase ✓ Upwind fencing can prevent material movement on site ✓ Apply water or a stabilizing agent in sufficient quantities to prevent the generation of visible dust plumes

TABLE 1
BEST AVAILABLE CONTROL MEASURES
(Applicable to All Construction Activity Sources)

Source Category	Control Measure	Guidance
Importing/exporting of bulk materials	09-1 Stabilize material while loading to reduce fugitive dust emissions; and 09-2 Maintain at least six inches of freeboard on haul vehicles; and 09-3 Stabilize material while transporting to reduce fugitive dust emissions; and 09-4 Stabilize material while unloading to reduce fugitive dust emissions; and 09-5 Comply with Vehicle Code Section 23114.	✓ Use tarps or other suitable enclosures on haul trucks ✓ Check belly-dump truck seals regularly and remove any trapped rocks to prevent spillage ✓ Comply with track-out prevention/mitigation requirements ✓ Provide water while loading and unloading to reduce visible dust plumes
Landscaping	10-1 Stabilize soils, materials, slopes	✓ Apply water to materials to stabilize ✓ Maintain materials in a crusted condition ✓ Maintain effective cover over materials ✓ Stabilize sloping surfaces using soil binders until vegetation or ground cover can effectively stabilize the slopes ✓ Hydroseed prior to rain season
Road shoulder maintenance	11-1 Apply water to unpaved shoulders prior to clearing; and 11-2 Apply chemical dust suppressants and/or washed gravel to maintain a stabilized surface after completing road shoulder maintenance.	✓ Installation of curbing and/or paving of road shoulders can reduce recurring maintenance costs ✓ Use of chemical dust suppressants can inhibit vegetation growth and reduce future road shoulder maintenance costs

TABLE 1
BEST AVAILABLE CONTROL MEASURES
(Applicable to All Construction Activity Sources)

Source Category	Control Measure	Guidance
Screening	12-1 Pre-water material prior to screening; and 12-2 Limit fugitive dust emissions to opacity and plume length standards; and 12-3 Stabilize material immediately after screening.	✓ Dedicate water truck or high capacity hose to screening operation ✓ Drop material through the screen slowly and minimize drop height ✓ Install wind barrier with a porosity of no more than 50% upwind of screen to the height of the drop point
Staging areas	13-1 Stabilize staging areas during use; and 13-2 Stabilize staging area soils at project completion.	✓ Limit size of staging area ✓ Limit vehicle speeds to 15 miles per hour ✓ Limit number and size of staging area entrances/exists
Stockpiles/ Bulk Material Handling	14-1 Stabilize stockpiled materials. 14-2 Stockpiles within 100 yards of off-site occupied buildings must not be greater than eight feet in height; or must have a road bladed to the top to allow water truck access or must have an operational water irrigation system that is capable of complete stockpile coverage.	✓ Add or remove material from the downwind portion of the storage pile ✓ Maintain storage piles to avoid steep sides or faces

TABLE 1
BEST AVAILABLE CONTROL MEASURES
(Applicable to All Construction Activity Sources)

Source Category	Control Measure	Guidance
Traffic areas for construction activities	15-1 Stabilize all off-road traffic and parking areas; and 15-2 Stabilize all haul routes; and 15-3 Direct construction traffic over established haul routes.	✓ Apply gravel/paving to all haul routes as soon as possible to all future roadway areas ✓ Barriers can be used to ensure vehicles are only used on established parking areas/haul routes
Trenching	16-1 Stabilize surface soils where trencher or excavator and support equipment will operate; and 16-2 Stabilize soils at the completion of trenching activities.	✓ Pre-watering of soils prior to trenching is an effective preventive measure. For deep trenching activities, pre-trench to 18 inches soak soils via the pre-trench and resuming trenching ✓ Washing mud and soils from equipment at the conclusion of trenching activities can prevent crusting and drying of soil on equipment
Truck loading	17-1 Pre-water material prior to loading; and 17-2 Ensure that freeboard exceeds six inches (CVC 23114)	✓ Empty loader bucket such that no visible dust plumes are created ✓ Ensure that the loader bucket is close to the truck to minimize drop height while loading
Turf Overseeding	18-1 Apply sufficient water immediately prior to conducting turf vacuuming activities to meet opacity and plume length standards; and 18-2 Cover haul vehicles prior to exiting the site.	✓ Haul waste material immediately off-site

TABLE 1
BEST AVAILABLE CONTROL MEASURES
(Applicable to All Construction Activity Sources)

Source Category	Control Measure		Guidance
Unpaved roads/parking lots	19-1	Stabilize soils to meet the applicable performance standards; and	✓ Restricting vehicular access to established unpaved travel paths and parking lots can reduce stabilization requirements
	19-2	Limit vehicular travel to established unpaved roads (haul routes) and unpaved parking lots.	
Vacant land	20-1	In instances where vacant lots are 0.10 acre or larger and have a cumulative area of 500 square feet or more that are driven over and/or used by motor vehicles and/or off-road vehicles, prevent motor vehicle and/or off-road vehicle trespassing, parking and/or access by installing barriers, curbs, fences, gates, posts, signs, shrubs, trees or other effective control measures.	

Table 2
DUST CONTROL MEASURES FOR LARGE OPERATIONS

FUGITIVE DUST SOURCE CATEGORY	CONTROL ACTIONS	
Earth-moving (except construction cutting and filling areas, and mining operations)	(1a)	Maintain soil moisture content at a minimum of 12 percent, as determined by ASTM method D-2216, or other equivalent method approved by the Executive Officer, the California Air Resources Board, and the U.S. EPA. Two soil moisture evaluations must be conducted during the first three hours of active operations during a calendar day, and two such evaluations each subsequent four-hour period of active operations; OR
	(1a-1)	For any earth-moving which is more than 100 feet from all property lines, conduct watering as necessary to prevent visible dust emissions from exceeding 100 feet in length in any direction.
Earth-moving: Construction fill areas:	(1b)	Maintain soil moisture content at a minimum of 12 percent, as determined by ASTM method D-2216, or other equivalent method approved by the Executive Officer, the California Air Resources Board, and the U.S. EPA. For areas which have an optimum moisture content for compaction of less than 12 percent, as determined by ASTM Method 1557 or other equivalent method approved by the Executive Officer and the California Air Resources Board and the U.S. EPA, complete the compaction process as expeditiously as possible after achieving at least 70 percent of the optimum soil moisture content. Two soil moisture evaluations must be conducted during the first three hours of active operations during a calendar day, and two such evaluations during each subsequent four-hour period of active operations.

Table 2 (Continued)

FUGITIVE DUST SOURCE CATEGORY	CONTROL ACTIONS	
Earth-moving: Construction cut areas and mining operations:	(1c)	Conduct watering as necessary to prevent visible emissions from extending more than 100 feet beyond the active cut or mining area unless the area is inaccessible to watering vehicles due to slope conditions or other safety factors.
Disturbed surface areas (except completed grading areas)	(2a/b)	Apply dust suppression in sufficient quantity and frequency to maintain a stabilized surface. Any areas which cannot be stabilized, as evidenced by wind driven fugitive dust must have an application of water at least twice per day to at least 80 percent of the unstabilized area.
Disturbed surface areas: Completed grading areas	(2c)	Apply chemical stabilizers within five working days of grading completion; OR
	(2d)	Take actions (3a) or (3c) specified for inactive disturbed surface areas.
Inactive disturbed surface areas	(3a)	Apply water to at least 80 percent of all inactive disturbed surface areas on a daily basis when there is evidence of wind driven fugitive dust, excluding any areas which are inaccessible to watering vehicles due to excessive slope or other safety conditions; OR
	(3b)	Apply dust suppressants in sufficient quantity and frequency to maintain a stabilized surface; OR
	(3c)	Establish a vegetative ground cover within 21 days after active operations have ceased. Ground cover must be of sufficient density to expose less than 30 percent of unstabilized ground within 90 days of planting, and at all times thereafter; OR
	(3d)	Utilize any combination of control actions (3a), (3b), and (3c) such that, in total, these actions apply to all inactive disturbed surface areas.

Table 2 (Continued)

FUGITIVE DUST SOURCE CATEGORY	CONTROL ACTIONS	
Unpaved Roads	(4a)	Water all roads used for any vehicular traffic at least once per every two hours of active operations [3 times per normal 8 hour work day]; OR
	(4b)	Water all roads used for any vehicular traffic once daily and restrict vehicle speeds to 15 miles per hour; OR
	(4c)	Apply a chemical stabilizer to all unpaved road surfaces in sufficient quantity and frequency to maintain a stabilized surface.
Open storage piles	(5a)	Apply chemical stabilizers; OR
	(5b)	Apply water to at least 80 percent of the surface area of all open storage piles on a daily basis when there is evidence of wind driven fugitive dust; OR
	(5c)	Install temporary coverings; OR
	(5d)	Install a three-sided enclosure with walls with no more than 50 percent porosity which extend, at a minimum, to the top of the pile. This option may only be used at aggregate-related plants or at cement manufacturing facilities.
All Categories	(6a)	Any other control measures approved by the Executive Officer and the U.S. EPA as equivalent to the methods specified in Table 2 may be used.

TABLE 3
CONTINGENCY CONTROL MEASURES FOR LARGE OPERATIONS

FUGITIVE DUST SOURCE CATEGORY	CONTROL MEASURES
Earth-moving	(1A) Cease all active operations; OR (2A) Apply water to soil not more than 15 minutes prior to moving such soil.
Disturbed surface areas	(0B) On the last day of active operations prior to a weekend, holiday, or any other period when active operations will not occur for not more than four consecutive days: apply water with a mixture of chemical stabilizer diluted to not less than 1/20 of the concentration required to maintain a stabilized surface for a period of six months; OR (1B) Apply chemical stabilizers prior to wind event; OR (2B) Apply water to all unstabilized disturbed areas 3 times per day. If there is any evidence of wind driven fugitive dust, watering frequency is increased to a minimum of four times per day; OR (3B) Take the actions specified in Table 2, Item (3c); OR (4B) Utilize any combination of control actions (1B), (2B), and (3B) such that, in total, these actions apply to all disturbed surface areas.
Unpaved roads	(1C) Apply chemical stabilizers prior to wind event; OR (2C) Apply water twice per hour during active operation; OR (3C) Stop all vehicular traffic.
Open storage piles	(1D) Apply water twice per hour; OR (2D) Install temporary coverings.
Paved road track-out	(1E) Cover all haul vehicles; OR (2E) Comply with the vehicle freeboard requirements of Section 23114 of the California Vehicle Code for both public and private roads.
All Categories	(1F) Any other control measures approved by the Executive Officer and the U.S. EPA as equivalent to the methods specified in Table 3 may be used.

Table 4
(Conservation Management Practices for Confined Animal Facilities)

SOURCE CATEGORY	CONSERVATION MANAGEMENT PRACTICES
Manure Handling **(Only applicable to Commercial Poultry Ranches)**	(1a) Cover manure prior to removing material off-site; AND (1b) Spread the manure before 11:00 AM and when wind conditions are less than 25 miles per hour; AND (1c) Utilize coning and drying manure management by removing manure at laying hen houses at least twice per year and maintain a base of no less than 6 inches of dry manure after clean out; or in lieu of complying with conservation management practice (1c), comply with conservation management practice (1d). (1d) Utilize frequent manure removal by removing the manure from laying hen houses at least every seven days and immediately thin bed dry the material.
Feedstock Handling	(2a) Utilize a sock or boot on the feed truck auger when filling feed storage bins.
Disturbed Surfaces	(3a) Maintain at least 70 percent vegetative cover on vacant portions of the facility; OR (3b) Utilize conservation tillage practices to manage the amount, orientation and distribution of crop and other plant residues on the soil surface year-round, while growing crops (if applicable) in narrow slots or tilled strips; OR (3c) Apply dust suppressants in sufficient concentrations and frequencies to maintain a stabilized surface.
Unpaved Roads	(4a) Restrict access to private unpaved roads either through signage or physical access restrictions and control vehicular speeds to no more than 15 miles per hour through worker notifications, signage, or any other necessary means; OR (4b) Cover frequently traveled unpaved roads with low silt content material (i.e., asphalt, concrete, recycled road base, or gravel to a minimum depth of four inches); OR (4c) Treat unpaved roads with water, mulch, chemical dust suppressants or other cover to maintain a stabilized surface.
Equipment Parking Areas	(5a) Apply dust suppressants in sufficient quantity and frequency to maintain a stabilized surface; OR (5b) Apply material with low silt content (i.e., asphalt, concrete, recycled road base, or gravel to a depth of four inches).

APPENDIX "B"

PROJECT SIGNS

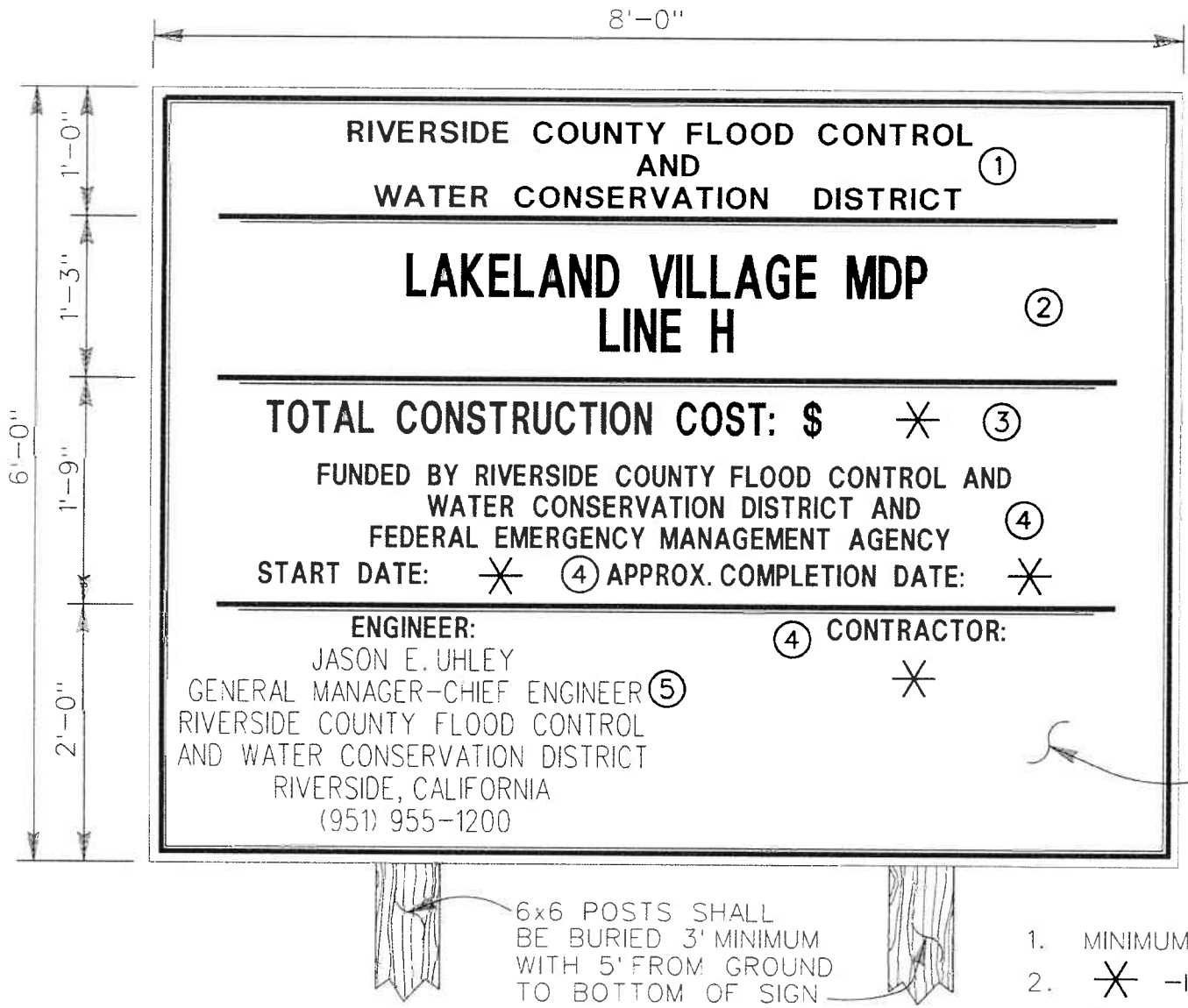

LETTER SCHEDULE

	SIZE	COLOR
1	2"	BLACK
2	4"	ROYAL
3	3"	ROYAL
4	2"	ROYAL
5	2"	BLACK

NOTES:

1. MINIMUM SPACING BETWEEN LINES 1".
2. ✳ –INFO. FURNISHED BY ENGINEER
3. ALL LETTERS FILLED AND CENTERED
4. THE STRIPES ARE GOLD AND BLACK ON WHITE BACKGROUND.

APPENDIX "B" PROJECT SIGN

APPENDIX "C"

LOG OF SOIL BORINGS
GEOTECHNICAL REPORT

NOTICE: The geotechnical report is included herein for informational purposes only. This report was not prepared for purposes of bid development. It was produced to assist the design engineer regarding overall project feasibility and to make recommendations regarding some design parameters. Contractors are encouraged to confer with the geotechnical engineer who prepared the report (a modest fee may be required) and/or to conduct additional study to obtain the specific types of information they need or prefer.

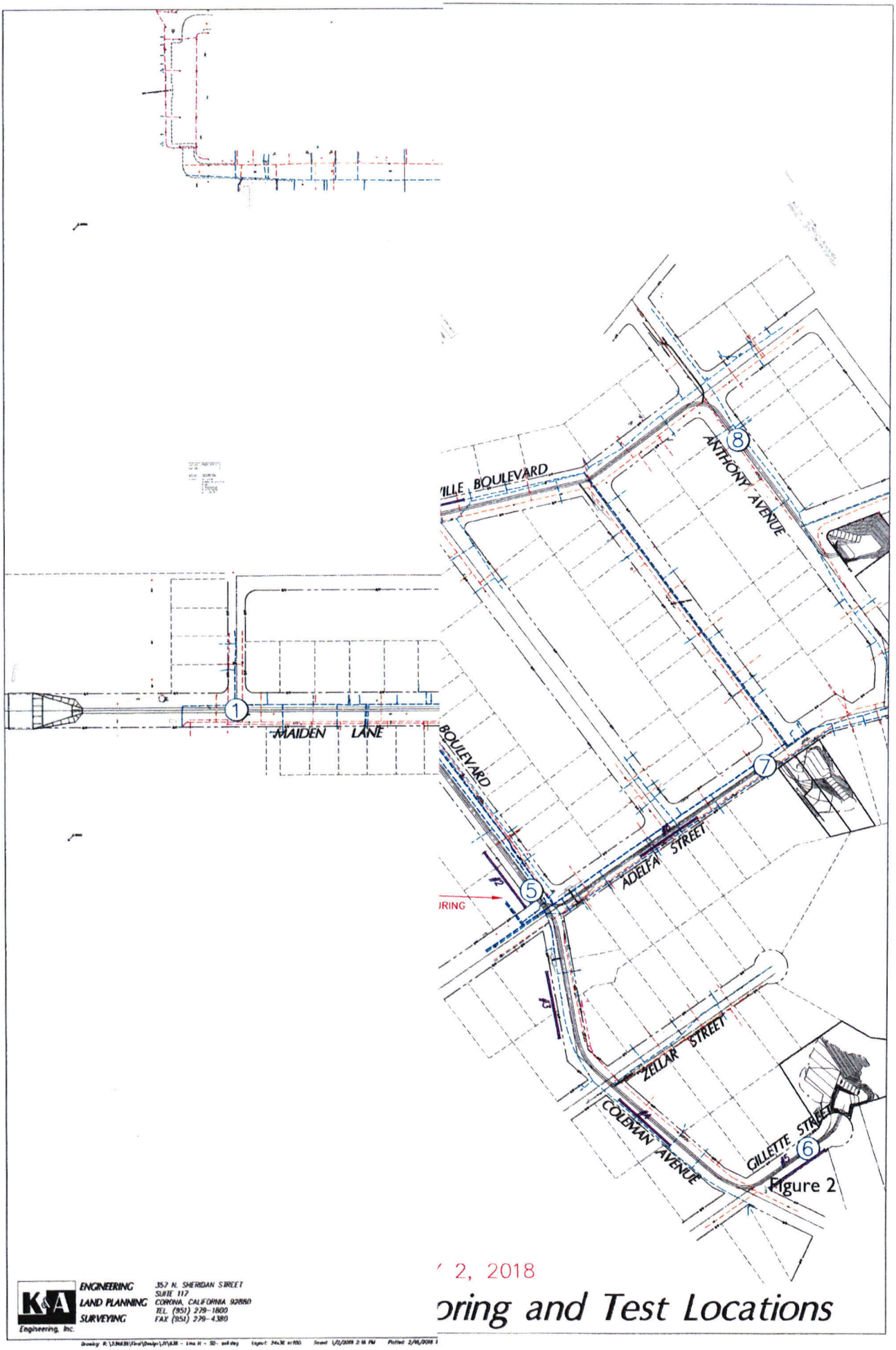
MAIDEN LANE
BOULEVARD
ANTHONY AVENUE
ADELFA STREET
ZELLAR STREET
COLEMAN AVENUE
GILLETTE STREET
1
5
6
7
8
Figure 2
K&A Engineering, Inc.
ENGINEERING
LAND PLANNING
SURVEYING
357 N. SHERIDAN STREET
SUITE 117
CORONA, CALIFORNIA 92880
TEL (951) 279-1800
FAX (951) 279-4380
2, 2018
oring and Test Locations

APPENDIX A

LOGS OF EXPLORATORY BORINGS

Lakeland Village MDP Line H

Lakeland Village Area of Lake Elsinore, Riverside County, California

Project No. 1726-CR

GEOTEK

A - FIELD TESTING AND SAMPLING PROCEDURES

The Modified Split-Barrel Sampler (Ring)

The ring sampler is driven into the ground in accordance with ASTM Test Method D 3550. The sampler, with an external diameter of three inches, is lined with 1-inch long, thin brass rings with inside diameters of approximately 2.4 inches. The sampler is typically driven into the ground 12 or 18 inches with a 140-pound hammer free falling from a height of 30 inches. Blow counts are recorded for every 6 inches of penetration as indicated on the log of boring. The samples are removed from the sample barrel in the brass rings, sealed, and transported to the laboratory for testing.

Bulk Samples

Bulk samples are normally bags of earth materials over 20 pounds in weight collected from the field by means of hand digging or exploratory cuttings.

B - BORING LOG LEGEND

The following abbreviations and symbols often appear in the classification and description of soil and rock on the logs of borings:

SOILS

USCS	Unified Soil Classification System
f-c	Fine to coarse
f-m	Fine to medium

GEOLOGIC

B: Attitudes	Bedding: strike/dip
J: Attitudes	Joint: strike/dip
C:	Contact line
.....	Dashed line denotes USCS material change
———	Solid Line denotes unit / formational change
▬▬▬	Thick solid line denotes end of boring

(Additional denotations and symbols are provided on the logs of borings)

GeoTek, Inc.

LOG OF EXPLORATORY BORING

CLIENT:	K&A Engineering, Inc	**DRILLER:**	2R Drilling	**LOGGED BY:**	DRW
PROJECT NAME:	Lakeland Village MDP Line H	**DRILL METHOD:**	Hollw Stem Auger	**OPERATOR:**	George
PROJECT NO.:	1726-CR	**HAMMER:**	140lbs/30in	**RIG TYPE:**	CME 75
LOCATION:	See Boring Location Map			**DATE:**	1/22/2018

BORING NO.: B-1

Depth (ft)	SAMPLES: Sample Type	SAMPLES: Blows/ 6 in	SAMPLES: Sample Number	USCS Symbol	MATERIAL DESCRIPTION AND COMMENTS	Laboratory Testing: Water Content (%)	Laboratory Testing: Dry Density (pcf)	Laboratory Testing: Others
					4" Asphaltic Concrete			
					Alluvium:			MD, RV, SR RV = 72
		4 5 7		SM	Silty f-c SAND, dark brwon, moist, loose	5.3	117.2	
5		2 3 5			Same as above, trace fine gravel	5.8	114.4	
		6 8 10			Silty f-c SAND, brown to dark brown, moist, medium dense, trace fine gravel	6.1	117.2	
10		8 11 13			Same as above	5.8	119.4	
15		12 18 19		SP	F-c SAND, brown, slightly moist, medium dense			
20		10 13 17		SM	Silty f-c SAND, brown, moist, medium dense			
25		16 33 32		SP	F-c SAND, brown, slightly moist, dense, some gravel			
30		21 18 20			F-c SAND, dark brown, moist, medium dense, trace gravel, thin silty to clayey laminations			
					BORING TERMINATED AT 31.5 FEET No groundwater encountered Boring backfilled with soil cuttings			

LEGEND

Sample type: --Ring; --SPT; --Small Bulk; --Large Bulk; --No Recovery; --Water Table

Lab testing: AL = Atterberg Limits; EI = Expansion Index; SA = Sieve Analysis; RV = R-Value Test; SR = Sulfate/Resistivity Test; SH = Shear Test; HC = Consolidation; MD = Maximum Density

GeoTek, Inc.

LOG OF EXPLORATORY BORING

CLIENT:	K&A Engineering, Inc.	**DRILLER:**	2R Drilling	**LOGGED BY:**	DRW
PROJECT NAME:	Lakeland Village MDP Line H	**DRILL METHOD:**	Hollw Stem Auger	**OPERATOR:**	George
PROJECT NO.:	1726-CR	**HAMMER:**	140lbs/30in	**RIG TYPE:**	CME 75
LOCATION:	See Boring Location Map			**DATE:**	1/22/2018

BORING NO.: B-2

Depth (ft)	SAMPLES: Sample Type	SAMPLES: Blows/ 6 in	SAMPLES: Sample Number	USCS Symbol	MATERIAL DESCRIPTION AND COMMENTS	Laboratory Testing: Water Content (%)	Laboratory Testing: Dry Density (pcf)	Laboratory Testing: Others
					Alluvium:			
		7 9 10		SP	F-c SAND, brown, slightly moist, medium dense, trace gravel	2.2	118.7	
5								
		12 15 20		SM	Silty f-c SAND, brown, moist, medium dense, trace gravel, trace clay			SH
		12 19 24			Silty f-c SAND, brown, slightly moist, medium dense, trace gravel	2.2	123.7	
10								SR
		17 25 23		SP	F-c SAND, grayish brown, slightly moist, medium dense, some gravel and cobble			
15		17 24 31		SM	Silty f-c SAND, brown, slightly moist, medium dense, some gravel	3.2	122.1	
20		23 50/5"		SP	**Fan Deposits:** Gravelly f-c SAND, brown, slightly moist, very dense	2.5		
25		50/2"			Same as above			
30		50/2"			Gravelly f-c SAND, brown, slightly moist, very dense			
					BORING TERMINATED AT 30.5 FEET No groundwater encountered Boring backfilled with soil cuttings			

LEGEND

Sample type: ---Ring; ---SPT; ---Small Bulk; ---Large Bulk; ---No Recovery; ---Water Table

Lab testing: AL = Atterberg Limits; EI = Expansion Index; SA = Sieve Analysis; RV = R-Value Test; SR = Sulfate/Resistivity Test; SH = Shear Test; HC= Consolidation; MD = Maximum Density

GeoTek, Inc.

LOG OF EXPLORATORY BORING

CLIENT:	K&A Engineering, Inc.	**DRILLER:**	2R Drilling	**LOGGED BY:**	DRW
PROJECT NAME	Lakeland Village MDP Line H	**DRILL METHOD:**	Hollw Stem Auger	**OPERATOR:**	George
PROJECT NO.:	1726-CR	**HAMMER:**	140lbs/30in	**RIG TYPE:**	CME 75
LOCATION:	See Boring Location Map			**DATE:**	1/22/2018

BORING NO.: B-3

Depth (ft)	SAMPLES: Sample Type	SAMPLES: Blows/ 6 in	SAMPLES: Sample Number	USCS Symbol	MATERIAL DESCRIPTION AND COMMENTS	Laboratory Testing: Water Content (%)	Laboratory Testing: Dry Density (pcf)	Laboratory Testing: Others
					6" Asphaltic Concrete			
					Fan Deposits:			
		17 23 50-4"		SM	Silty f-c SAND, dark brown, moist, very dense, some gravel and cobble			
5		50-5"			Same as above	2.8		
					Silty f-c SAND, brown, slightly mosit, very dense, some gravel and cobble			SR
10		26 35 41			Silty f-c SAND, brown, slightly moist, dense, some gravel, few cobbles	2.8	123.0	
15					**BORING TERMINATED AT 14 FEET (REFUSAL)** No groundwater encountered Boring backfilled with soil cuttings			
20								
25								
30								

LEGEND

Sample type: ---Ring ---SPT ---Small Bulk ---Large Bulk ---No Recovery ---Water Table

Lab testing: AL = Atterberg Limits; EI = Expansion Index; SA = Sieve Analysis; RV = R-Value Test; SR = Sulfate/Resistivity Test; SH = Shear Test; HC= Consolidation; MD = Maximum Density

GeoTek, Inc.

LOG OF EXPLORATORY BORING

CLIENT:	K&A Engineering, Inc	DRILLER:	2R Drilling	LOGGED BY:	DRW
PROJECT NAME	Lakeland Village MDP Line H	DRILL METHOD:	Hollw Stem Auger	OPERATOR:	George
PROJECT NO.:	1726-CR	HAMMER:	140lbs/30in	RIG TYPE:	CME 75
LOCATION:	See Boring Location Map			DATE:	1/23/2018

BORING NO.: B-4

Depth (ft)	SAMPLES: Sample Type	SAMPLES: Blows/ 6 in	SAMPLES: Sample Number	USCS Symbol	MATERIAL DESCRIPTION AND COMMENTS	Laboratory Testing: Water Content (%)	Laboratory Testing: Dry Density (pcf)	Laboratory Testing: Others
					5" Asphaltic Concrete			
					Artificial Fill:			
				SM	Silty f-c SAND, brown, slightly moist to moist, medium dense, some gravel, few cobbles			
					Fan Deposits:			
5		24 34 50/5"		SM	Silty gravelly f-c SAND, brown, slightly moist, very dense, some cobbles	2.8	125.1	MD, SE SE = 27
10		40 44 50/5"		GP	F-c sandy GRAVEL, grayish brown, slightly moist, very dense			
		55/5"			Same as above			
15		50/2"			F-c sandy GRAVEL, grayish brown, slightly moist, very dense			
					BORING TERMINATED AT 15.5 FEET (REFUSAL) No groundwater encountered Boring backfilled with soil cuttings			
20								
25								
30								

LEGEND

Sample type: ---Ring ---SPT ---Small Bulk ---Large Bulk ---No Recovery ---Water Table

Lab testing: AL = Atterberg Limits; EI = Expansion Index; SA = Sieve Analysis; RV = R-Value Test; SR = Sulfate/Resisitivity Test; SH = Shear Test; HC= Consolidation; MD = Maximum Density

GeoTek, Inc.

LOG OF EXPLORATORY BORING

CLIENT:	K&A Engineering, Inc.	**DRILLER:**	2R Drilling	**LOGGED BY:**	DRW
PROJECT NAME	Lakeland Village MDP Line H	**DRILL METHOD:**	Hollw Stem Auger	**OPERATOR:**	George
PROJECT NO.:	1726-CR	**HAMMER:**	140lbs/30in	**RIG TYPE:**	CME 75
LOCATION:	See Boring Location Map			**DATE:**	1/23/2018

BORING NO.: B-5

Depth (ft)	SAMPLES: Sample Type	SAMPLES: Blows/ 6 in	SAMPLES: Sample Number	USCS Symbol	MATERIAL DESCRIPTION AND COMMENTS	Laboratory Testing: Water Content (%)	Laboratory Testing: Dry Density (pcf)	Laboratory Testing: Others
					4" Asphaltic Concrete			
					Artificial Fill:			
		12 17 20		SC	Clayey silty f-c SAND, dark brown, moist, medium dense, trace gravel			
5		20 50/6"		SM	Silty f-c SAND, brown, slightly moist to moist, very dense, trace gravel	4.0	121.1	
					Fan Deposits:			
10		50/4"		GP	F-c Sandy GRAVEL, grayish brown, slightly moist, very dense, some cobbles			SE SE = 71
15		50/4"		SM	Silty f-c SAND, brown, slightly moist, very dense, some gravel, some cobbles	2.4		
20		50/4"		SP	Gravelly f-c SAND, grayish brown, slightly moslt, very dense, trace cobbles			
25		50/4"			Same as above			
					BORING TERMINATED AT 25.5 FEET (REFUSAL) No groundwater encountered Boring backfilled with soil cuttings			
30								

LEGEND

Sample type: ---Ring ---SPT ---Small Bulk ---Large Bulk ---No Recovery ---Water Table

Lab testing: AL = Atterberg Limits; EI = Expansion Index; SA = Sieve Analysis; RV = R-Value Test; SR = Sulfate/Resistivity Test; SH = Shear Test; HC= Consolidation; MD = Maximum Density

GeoTek, Inc.
LOG OF EXPLORATORY BORING

CLIENT:	K&A Engineering, Inc.	**DRILLER:**	2R Drilling	**LOGGED BY:**	DRW
PROJECT NAME	Lakeland Village MDP Line H	**DRILL METHOD:**	Hollw Stem Auger	**OPERATOR:**	George
PROJECT NO.:	1726-CR	**HAMMER:**	140lbs/30in	**RIG TYPE:**	CME 75
LOCATION:	See Boring Location Map			**DATE:**	1/23/2018

BORING NO.: B-6

Depth (ft)	SAMPLES: Sample Type	SAMPLES: Blows/ 6 in	SAMPLES: Sample Number	USCS Symbol	MATERIAL DESCRIPTION AND COMMENTS	Laboratory Testing: Water Content (%)	Laboratory Testing: Dry Density (pcf)	Laboratory Testing: Others
					10" Asphaltic Concrete			
				SM	**Artificial Fill:** Silty f-c SAND, dark brown, mosit, medium dense, trace gravel			
5		24 44 50/6"		SP	**Fan Deposits:** Gravelly f-c SAND, grayish brown, slightly moist, very dense	3.6	129.1	
10		33 50/3"		SM	Silty f-c SAND, brown, slightly moist, very dense, some gravel, few cobbles Same as above	3.1		
		17 23 27		SP/SM	F-c SAND to silty f-c SAND, brown, slightly moist, medium dense, trace gravel			SH, SE SE = 27
15		40 50/4"		SP	Gravelly f-c SAND, grayish brown, slightly moist, very dense, trace cobble			
20					**BORING TERMINATED AT 18 FEET (REFUSAL)** No groundwater encountered Boring backfilled with soil cuttings			
25								
30								

LEGEND

Sample type: ---Ring ---SPT ---Small Bulk ---Large Bulk ---No Recovery ---Water Table

Lab testing: AL = Atterberg Limits; EI = Expansion Index; SA = Sieve Analysis; RV = R-Value Test; SR = Sulfate/Resistivity Test; SH = Shear Test; HC= Consolidation; MD = Maximum Density

GeoTek, Inc.

LOG OF EXPLORATORY BORING

CLIENT:	K&A Engineering, Inc	DRILLER:	2R Drilling	LOGGED BY:	DRW
PROJECT NAME	Lakeland Village MDP Line H	DRILL METHOD:	Hollw Stem Auger	OPERATOR:	George
PROJECT NO.:	1726-CR	HAMMER:	140lbs/30in	RIG TYPE:	CME 75
LOCATION:	See Boring Location Map			DATE:	1/23/2018

Depth (ft)	SAMPLES: Sample Type	SAMPLES: Blows/ 6 in	SAMPLES: Sample Number	USCS Symbol	BORING NO.: B-7 — MATERIAL DESCRIPTION AND COMMENTS	Laboratory Testing: Water Content (%)	Laboratory Testing: Dry Density (pcf)	Laboratory Testing: Others
					7" Asphaltic Concrete			
					Artificial Fill:			
		9 50/4"		SC	Clayey silty f-c SAND, dark reddish brown, moist, medium dense			
					Fan Deposits:			
5		14 13 13		SP	Gravelly f-c SAND, brown, slightly moist, medium dense			
10		29 30 29		SM	Silty f-c SAND, dark brown, moist, dense, some gravel, some cobbles			
15		27 32 50/3"		SP	Gravelly f-c SAND, brown, slightly moist, very dense, some cobbles	3.1	126.5	
					BORING TERMINATED AT 17 FEET (REFUSAL) No groundwater encountered Boring backfilled with soil cuttings			
20								
25								
30								

LEGEND

Sample type: ---Ring; ---SPT; ---Small Bulk; ---Large Bulk; ---No Recovery; ---Water Table

Lab testing: AL = Atterberg Limits; EI = Expansion Index; SA = Sieve Analysis; RV = R-Value Test; SR = Sulfate/Resistivity Test; SH = Shear Test; HC= Consolidation; MD = Maximum Density

GeoTek, Inc.

LOG OF EXPLORATORY BORING

CLIENT:	K&A Engineering, Inc.	**DRILLER:**	2R Drilling	**LOGGED BY:**	DRW
PROJECT NAME	Lakeland Village MDP Line H	**DRILL METHOD:**	Hollw Stem Auger	**OPERATOR:**	George
PROJECT NO.:	1726-CR	**HAMMER:**	140lbs/30in	**RIG TYPE:**	CME 75
LOCATION:	See Boring Location Map			**DATE:**	1/23/2018

BORING NO.: B-8

Depth (ft)	SAMPLES: Sample Type	SAMPLES: Blows/ 6 in	SAMPLES: Sample Number	USCS Symbol	MATERIAL DESCRIPTION AND COMMENTS	Laboratory Testing: Water Content (%)	Laboratory Testing: Dry Density (pcf)	Laboratory Testing: Others
					Fan Deposits:			
				SP	Gravelly f-c SAND, dark brown, moist, very dense, some cobbles			RV RV = 77
5		20 25 30			Same as above	2.8	133.0	
10		32 50/6"			F-c SAND, brown, slightly moist, very dense, some gravel, some cobbles	3.2	119.9	
15		50/5"			Same as above	6.3	121.0	
20		50/3"			Gravelly f-c SAND, brown, slightly moist, very dense, some cobbles			
					BORING TERMINATED AT 22 FEET (REFUSAL) No groundwater encountered Boring backfilled with soil cuttings			
25								
30								

LEGEND

Sample type: ---Ring ---SPT ---Small Bulk ---Large Bulk ---No Recovery ---Water Table

Lab testing: AL = Atterberg Limits; EI = Expansion Index; SA = Sieve Analysis; RV = R-Value Test; SR = Sulfate/Resistivity Test; SH = Shear Test; HC= Consolidation; MD = Maximum Density

GeoTek, Inc.

LOG OF EXPLORATORY BORING

CLIENT:	K&A Engineering, Inc	DRILLER:	2R Drilling	LOGGED BY:	DRW
PROJECT NAME	Lakeland Village MDP Line H	DRILL METHOD:	Hollw Stem Auger	OPERATOR:	George
PROJECT NO.:	1726-CR	HAMMER:	140lbs/30in	RIG TYPE:	CME 75
LOCATION:	See Boring Location Map			DATE:	1/22/2018

Depth (ft)	SAMPLES: Sample Type	SAMPLES: Blows/ 6 in	SAMPLES: Sample Number	USCS Symbol	BORING NO.: I-1 — MATERIAL DESCRIPTION AND COMMENTS	Laboratory Testing: Water Content (%)	Laboratory Testing: Dry Density (pcf)	Laboratory Testing: Others
					Alluvium:			
				SP	Gravelly f-c SAND, dark brown, moist, very dense, some cobbles			
5					Same as above			
10					Gravelly f-c SAND, brown, slightly moist, very dense, some cobbles			
15					F-c SAND, brown, slightly moist, very dense, some grave, some cobbles			
20					**BORING TERMINATED AT 20 FEET**			
					No groundwater encountered			
25								
30								

LEGEND

Sample type: ---Ring ---SPT —Small Bulk ---Large Bulk ---No Recovery —Water Table

Lab testing:
AL = Atterberg Limits; EI = Expansion Index; SA = Sieve Analysis; RV = R-Value Test
SR = Sulfate/Resistivity Test; SH = Shear Test; HC= Consolidation; MD = Maximum Density

GeoTek, Inc.

LOG OF EXPLORATORY BORING

CLIENT:	K&A Engineering, Inc.	**DRILLER:**	2R Drilling	**LOGGED BY:**	DRW
PROJECT NAME	Lakeland Village MDP Line H	**DRILL METHOD:**	Hollw Stem Auger	**OPERATOR:**	George
PROJECT NO.:	1726-CR	**HAMMER:**	140lbs/30in	**RIG TYPE:**	CME 75
LOCATION:	See Boring Location Map			**DATE:**	1/22/2018

Depth (ft)	SAMPLES: Sample Type	SAMPLES: Blows/ 6 in	SAMPLES: Sample Number	USCS Symbol	BORING NO.: I-2 — MATERIAL DESCRIPTION AND COMMENTS	Laboratory Testing: Water Content (%)	Laboratory Testing: Dry Density (pcf)	Laboratory Testing: Others
					Alluvium			
				SP	F-c SAND, dark brown, dry, very dense, some gravel, some cobbles			
5								
					F-c SAND, brown, slightly moist, very dense, some grave, some cobbles			
10								
					Gravelly f-c SAND, dark brown, moist, very dense, some cobbles			
15					**BORING TERMINATED AT 15 FEET**			
					No groundwater encountered			
20								
25								
30								

LEGEND

Sample type: —Ring; ---SPT; ---Small Bulk; ---Large Bulk; —No Recovery; —Water Table

Lab testing: AL = Atterberg Limits; EI = Expansion Index; SA = Sieve Analysis; RV = R-Value Test; SR = Sulfate/Resistivity Test; SH = Shear Test; HC= Consolidation; MD = Maximum Density

GeoTek, Inc.

LOG OF EXPLORATORY BORING

CLIENT:	K&A Engineering, Inc.	**DRILLER:**	2R Drilling	**LOGGED BY:**	DRW
PROJECT NAME	Lakeland Village MDP Line H	**DRILL METHOD:**	Hollw Stem Auger	**OPERATOR:**	George
PROJECT NO.:	1726-CR	**HAMMER:**	140lbs/30in	**RIG TYPE:**	CME 75
LOCATION:	See Boring Location Map			**DATE:**	1/22/2018

Depth (ft)	SAMPLES: Sample Type	SAMPLES: Blows/ 6 in	SAMPLES: Sample Number	USCS Symbol	BORING NO.: I-3 — MATERIAL DESCRIPTION AND COMMENTS	Laboratory Testing: Water Content (%)	Laboratory Testing: Dry Density (pcf)	Laboratory Testing: Others
					Alluvium:			
				SP	F-c SAND, brown, dry to slightly moist, very dense, some gravel, some cobbles			
5					**BORING TERMINATED AT 5 FEET**			
					No groundwater encountered			
10								
15								
20								
25								
30								

LEGEND

Sample type: ---Ring ---SPT ---Small Bulk ---Large Bulk ---No Recovery ---Water Table

Lab testing: AL = Atterberg Limits; EI = Expansion Index; SA = Sieve Analysis; RV = R-Value Test; SR = Sulfate/Resisitivity Test; SH = Shear Test; HC= Consolidation; MD = Maximum Density

APPENDIX "D"

RCFC VIDEO PROCEDURES

RCFC VIDEO PROCEDURES

GENERAL:

1. The Contractor shall provide all required traffic control, including warning lights and traffic cones, as needed or required in accordance with the Watch Manual, as well as any City-required traffic plans.

2. The Contractor shall obtain all permits required by the local jurisdiction.

STORM DRAIN CLEANING:

1. Storm drains shall be cleaned by removing dirt, debris and any construction debris.

2. If debris is found, the closed circuit television (CCTV) shall be rescheduled.

EQUIPMENT:

1. Contractor's staff shall have confined space training.

2. Air logs shall be kept onsite and shall be submitted with the final report.

3. The Contractor's CCTV equipment shall include video cameras, a video monitor cable, power sources, and all equipment necessary to perform a CCTV inspection as outlined in the Detailed Specifications.

4. The Contractor shall make a continuous color digital recording in MPEG 4 format for each storm drain segment inspected.

5. The cameras shall have pan and tilt capabilities, a minimum of 360 x 260 degree rotation, illumination sensitivity shall be three lux or less, and provide a minimum of 460 lines of resolution. The focal distance shall be adjustable through a range from 25mm (1 inch) to infinity.

6. During CCTV inspection, lighting intensity shall be adjusted to minimize glare. Lighting and picture quality shall be adjusted to provide a clear, in-focus picture of the entire periphery of the storm drain for all conditions encountered.

7. All camera systems shall be able to navigate around minor objects, roots, and debris. The system used to move the camera through the pipe shall not obstruct the camera's view or interfere with proper documentation of storm drain conditions.

8. The camera cable shall be retracted to remove slack and to ensure an accurate footage reading.

9. The distance shall be measured between beginning and ending structures.

10. The cable footage-counter shall be accurate to plus or minus 2 feet per 1,000 feet.

11. The camera lens shall be kept clear of condensation and debris during the CCTV inspection.

VIDEO:

1. All storm drain with a height or diameter of 60 inches or less shall be video recorded.

2. If the storm drain has multiple cells, each cell shall be video recorded.

3. Each storm drain segment will be a separate video file.

4. A storm drain segment will be defined as follows:

    a. Outlet structure to manhole
    b. Manhole to manhole
    c. Manhole to inlet structure

5. Each storm drain segment shall be identified with an initial text screen that contains the following:

    a. Surveyed by
    b. Storm drain title (i.e., mainline title, lateral title)
    c. Beginning structure station
    d. Ending structure station
    e. Pipe diameter or box dimensions
    f. Inspection date and time
    g. Stopwatch time initiated at beginning of video

6. After the initial text screen, the following shall be shown for the remainder of video:

    a. Beginning structure station
    b. Ending structure station
    c. Distance from beginning structure
    d. Stopwatch time initiated at beginning of video

OBSERVATIONS:

1. The following visual observations shall be recorded in the final report:

    a. Poor/no grouting between storm drain links
    b. Poor/no grouting at storm drain lift holes
    c. Exposed steel or spalling

d. Large cracks
e. Sags
f. Any unusual roughness or unevenness
g. Any connections not shown on plans
h. Structural defects of structures (i.e., junction structures, manholes, etc.)
i. Debris

REPORT:

1. The report shall contain a spreadsheet of observations of concern with the following:

    a. Description of concern
    b. Video file name
    c. Photo file name
    d. Stop watch time
    e. Distance from beginning structure

2. A digital picture of each concern in JPEG format shall be included within the report and the file name shall be included in spreadsheet.

3. The database header information contained within the final report will match the initial video screen

Q\Specscntr
01/15/19

APPENDIX "E"

CALIFORNIA DEPARTMENT OF FISH AND WILDLIFE (CDFW)

OP LAW AND STREAMBED NOTIFICATION APPLICATION

From:	Brandt, Jeff@Wildlife
To:	Uhley, Jason
Cc:	Martinez, Edith@Wildlife; Freeburn, Kim@Wildlife; Brandt, Jeff@Wildlife
Subject:	LSA 1600-2018-0046-R6 Lakeland Village Master Drainage Plan, Line H, Stage 1
Date:	Thursday, December 13, 2018 9:57:58 AM
Attachments:	image001.jpg

Jason Uhley
Riverside County Flood Control and Water Conservation District
1995 Market Street
Riverside, CA 92501
juhley@rcflood.org

Dear Mr. Uhley:

Notification of Lake or Streambed Alteration, Notification No. 1600-2018-0046-R6 Lakeland Village Master Drainage Plan, Line H, Stage 1

The California Department of Fish and Wildlife (CDFW) had until October 2, 2018 to submit a draft Lake or Streambed Alteration Agreement (Agreement) to you or inform you that an Agreement is not required. CDFW did not meet that date. As a result, by law, you may now complete the project described in your notification without an Agreement.

Please note that pursuant to Fish and Game Code section 1602, subdivision (a)(4)(D), if you proceed with this project, it must be the same as described and conducted in the same manner as specified in the notification and any modifications to that notification received by CDFW in writing prior to October 2, 2018. This includes completing the project within the proposed term and seasonal work period and implementing all avoidance and mitigation measures to protect fish and wildlife resources specified in the notification. If the term proposed in your notification has expired, you will need to re-notify CDFW before you may begin your project. Beginning or completing a project that differs in any way from the one described in the notification may constitute a violation of Fish and Game Code section 1602.

Your project proposes impacts to several unnamed tributaries to Lake Elsinore within the unincorporated community of Lakeland Village, south of Lake Elsinore, north of the lower foothills of Santa Ana Mountains, west of Blackwell Boulevard, and east of Gillette Street, in the County of Riverside, State of California; Assessor's parcel numbers 383-062-046 and 383-075-004. Your project proposes to construct a new storm drain system and sediment basin to alleviate flooding within the Lakeland Village community. A total of 0.36 acre of streambed will be impacted, including 0.19 acre of riparian habitat. You have proposed to mitigate the impacts to 0.19 acre of riparian habitat through the purchase of 0.38 acre of riparian habitat rehabilitation credits. Your project term will end October 1, 2023.

Also note that while you are entitled to complete the project without an Agreement, you are still responsible for complying with other applicable local, state, and federal laws. These include, but are not limited to, Fish and Game Code sections 2080 *et seq.* (species listed as threatened or endangered, or a candidate for listing under the California Endangered Species Act); section 1908

(rare native plants); sections 3511, 4700, 5050, and 5515 (fully protected species); section 3503 (bird nests and eggs); section 3503.5 (birds of prey); section 5650 (water pollution); section 5652 (refuse disposal into water); section 5901 (fish passage); section 5937 (sufficient water for fish); and section 5948 (obstruction of stream).

Finally, if you decide to proceed with your project without an Agreement, you must have a copy of this letter and your notification with all attachments available at all times at the work site.

If you have questions regarding this letter, please contact Edith Martinez, Senior Environmental Scientist (Specialist), at (909) 944-0187 or by email at Edith.Martinez@wildlife.ca.gov.

Thank you,

Jeff Brandt
Habitat Conservation
California Department of Fish and Wildlife
3602 Inland Empire Blvd, Suite C-220
Ontario, CA 91764
Phone (909) 987-7161
Fax (909) 481-2945
Email jeff.brandt@wildlife.ca.gov

Every Californian should conserve water. Find out how at:

SaveOurWater_Logo

SaveOurWater.com · Drought.CA.gov

ECORP Consulting, Inc.
ENVIRONMENTAL CONSULTANTS

March 30, 2018
(2015-159.003)

Mr. Jeff Brandt
California Department of Fish and Wildlife
Inland Empire Office
3602 Inland Empire Blvd. Suite C220
Ontario, CA 91764
Via email: Jeff.Brandt@wildlife.ca.gov

CERTIFIED MAIL
RETURN RECEIPT REQUESTED

Subject: California Fish and Game Code 1602 Notification of Lake or Streambed Alteration for the Lakeland Village MDP Line H, Stage 1 (Project No. 3-0-00020)

Dear Mr. Brandt:

The Riverside County Flood Control and Water Conservation District (District) is submitting this notification pursuant to Section 1602 of the California Fish and Game Code of their intent to construct and maintain the Lakeland Village Master Drainage Plan (MDP) Line H, Stage 1 Project (Proposed Project). The project alignment is generally located within existing streets. Specifically the project alignment is located in the Riverside County community of Lakeland Village within Maiden Lane, Landerville Avenue, Cottrell Boulevard, Anthony Avenue, Adelfa Street, Coleman Avenue, Zellar Street, and Gillette Street.

PROJECT BACKGROUND AND PURPOSE

The Proposed Project would construct a new underground storm drain with some aboveground structures at inlets and outlets and a sediment basin, in the Riverside County community of Lakeland Village. The Proposed Project would alleviate flooding in the community of Lakeland Village, which currently lacks the infrastructure to convey significant stormwater flows. The purpose of the proposed Project is to protect life and property by reducing flooding within Lakeland Village.

California Environmental Quality Act

The Proposed Project is part of the Lakeland Village MDP for which a Final Program Environmental Impact Report (Final PEIR) was certified by the Riverside County Flood Control and Water Conservation District Board of Supervisors on March 10, 2015. The Lakeland Village MDP analyzed in the Final PEIR included the Proposed Project; however, since the Final PEIR was adopted the alignment changed slightly and an approximate 1.5-acre sediment basin was added.

An Addendum to the Final PEIR was prepared to address the minor changes and additions that Proposed Project made to the MDP facilities analyzed in the certified Final PEIR. Pursuant to CEQA Guidelines Section 15164, the lead agency shall consider this Addendum with the Final PEIR prior to making a decision on the Proposed Project.

Changes/Additions

The Proposed Project includes minor alignment changes to the Line H that was analyzed as part of the MDP facilities in the Final PEIR. Furthermore, the Proposed Project includes a sediment basin to improve water quality that was not previously included in the MDP facilities analyzed in the Final PEIR.

To ensure that the Proposed Project would not result in new significant impacts, the Proposed Project has been reevaluated in an Addendum to the Final PEIR. The effect of the minor changes and additions has been evaluated and current regulations and thresholds were used to verify that the Proposed Project's impacts remain the same or lower than what was determined in the Final PEIR. The District has determined that the changes and additions are minor and no new or more significant impacts have been determined.

Section 401 Permitting

The District is also seeking authorization under Section 401 for Water Quality Certification. The Project includes fill of 0.04-acre of jurisdictional Waters of the U.S. in the form of two unvegetated, non-wetland Waters of the U.S. The construction of inlet structures and grading will occur within the jurisdictional drainages. A copy of the Section 401 application is enclosed.

Section 404 Permitting

The District is seeking authorization under Section 404, under the Nationwide Permit Program (Nationwide Permit 43: Storm Water Management Facilities) for fill of 0.04-acre of jurisdictional Waters of the U.S. A copy of the pre-construction notification to the Corps of Engineers is enclosed.

PROJECT DESCRIPTION

The Proposed Project would consist of construction, operation and maintenance of a new underground storm drain system with some aboveground at inlets and outlets and a mostly earthen sediment basin, in the Riverside County community of Lakeland Village. Please refer to Figure 2 Project Location. The Proposed Project would capture flows from four separate locations prior to crossing streets, residential yards, or flowing immediately adjacent to structures. The four pickup points are described as follows:

1. At the end of Gillette Street south of Cottrell Boulevard;
2. At the southwest corner of Anthony Avenue and Brand Street;

3. Near the existing low flow alignment approximately 130 feet west of Adelfa Street near the intersection of Adelfa Street and Peeler Avenue; and
4. Near the existing low-flow alignment approximately 130 feet east of Landerville Boulevard on Anthony Avenue.

The proposed 4,300-foot main line would capture flows from the end of Gillette Street, route them in an underground storm drain northerly in Gillette Street, east on Cottrell Boulevard, and then northerly on Maiden Lane which outlets into Lake Elsinore. The first lateral would route flow underground from Brand Street and Anthony Avenue in a storm drain, easterly on Anthony Avenue, northerly on Landerville Boulevard, and then junction with the mainline at Landerville Boulevard and Cottrell Avenue. The second lateral would route flows underground from a low-flow pickup point west of Adelfa Street in a storm drain across several vacant lots, northerly on Adelfa Street, and then junction with the mainline storm drain at Adelfa Street and Cottrell Boulevard. The lengths of Laterals 1 and 2 are approximately 1,100 and 500 feet, respectively.

ENVIRONMENTAL SETTING

The Project corresponds to portions of U.S. Geological Survey (USGS) Section 24, Township 6 South, Range 5 West (San Bernardino Base and Meridian) of the "Lake Elsinore, California" 7.5-minute quadrangle (USGS topographic quad, 1979). The approximate center of the Project is located at 33.639734 north and 117.349560 west. The Project is located within the Lake Elsinore subwatershed (HUC 180702020308) of the San Jacinto, California (HUC 180702020307) watershed. Refer to Figure 3 from the Jurisdictional Delineation Report.

The Proposed Project area is generally bounded by Lake Elsinore to the north, the lower foothills of the Santa Ana Mountains to the south, Blackwell Boulevard to the east, and Gillette Street to the west. The watershed is characteristically steep with high debris and sediment production potential. Runoff originating from this watershed generally flows northeasterly, across Grand Avenue (the community's principal thoroughfare) and into Lake Elsinore. Existing land use within the Proposed Project area is predominantly Medium Density Residential, Commercial Retail, and vacant open space.

The Proposed Project site consists primarily of developed land within private property. The Project site contains two Section 1602 jurisdictional ephemeral channels. The vegetation within the jurisdictional channels consists of non-native species such as brome grasses and mustard. Additionally, at the northern end of the Project site next to Lake Elsinore is a stand of Southern Willow Scrub. Refer to Figure 6 from the Jurisdictional Delineation Report.

Vegetation Communities

The Project is located in the South Coast Subregion of the Southwestern California floristic region of California (Baldwin et. al. 2012). The Section 1602 jurisdictional areas within the Project site contain two vegetation communities: southern willow scrub and non-native grassland.

Southern willow scrub is a native vegetation community associated with either a riverine environment or a wetland environment. The cover consists of species with a high requirement for moisture and usually the community will only develop in the present of a constant water source. Wildlife diversity tends to be higher in riparian communities. Southern willow scrub occurs towards the north end of Maiden Lane near the shoreline for Lake Elsinore. The plant species found within this vegetation community on Project area include primarily Gooding's black willows (*Salix Goodingii*), Fremont's cottonwood (*Populus fremontii*) along with some mule fat (*Baccharis salicifolia*).

Non-native grassland is a habitat community that is characterized by annual grasses often associated with numerous species of native and nonnative annual forbs, especially in years of abundant rainfall. The dominant vegetation usually emerges after the rains, produces seeds, and dies before the next rainy season. Some plant growth occurs in the winter, but most growth and flowering occurs in the spring. The survey area was mostly dominated by small flowered fiddleneck (*Amsinckia menziesii*). Other prominent plant species observed in the Project area included slender wild oat (*Avena barbata*), mustard (*Brassica* sp.), brome (*Bromus* sp.), and red-stemmed fillaree (*Erodium cicutarium*). Non-native grassland also occurs within the proposed sediment basin site.

Soils

According to the Web Soil Survey (NRCS 2006), six soil units, or types, have been mapped within the Project site: Cieneba, Hanford, Las Posas, Soboba, Grangeville, and Travers. Soil mapping within Lake Elsinore itself is classified as "Water" on the soil mapping but it can be implied that these soils are derived from the Travers series based on the adjacent soils. By a large margin, the dominant soil series within the Project area is Hanford series soils, which is a non-hydric soil having a rapid permeability rating and low runoff potential

Hydric soils are generally absent from most of the Project area, with the exception of Soboba series, expressed here as Soboba cobbly loamy sand (Hydric Criterion 4). Criterion 4 soils have components that are frequently flooded for long or very long durations during the growing season and are conducive to supporting pooled or ponded water or other water features. The Soboba soil type is derived from granitic rocks and is usually associated with floodplains or alluvial fans. Within the Project area, the Soboba series soils are located on hillsides near the westernmost portion of the Project area, just south of Coleman Avenue. Refer to Figure 5 from the Jurisdictional Delineation Report.

The specific designations of soils, including their hydric status, within the Project area can be found in Table 1.

Table 1. Soil Series within the Project area[1]

Soil Series	Series Name/Number	Hydric Soil (Y/N)
Cieneba	Cieneba rock-outcrop complex, 30 to 75 percent slopes	N

Hanford	Hanford sandy loam, 2 to 9 percent slopes	N
Las Posas	Las Posas gravelly loam, 15 to 540 percent slopes	N
Soboba	Soboba cobbly loamy sand, 0 to 15 percent slopes	Y; Criterion 4
Grangeville	Grangeville fine sandy loam, drained, 5 to 15 percent slopes	N
Travers	Travers loamy fine sand, eroded	N

[1]Source: USDA 2014a, 2014b

Wildlife

A biological survey was completed by ECORP Consulting, Inc. and included a Study Area extending beyond the Proposed Project site. Wildlife observed in the Study Area included birds such as mourning dove (*Zenaida macroura*), northern mockingbird (*Mimus polyglottos*), house sparrows (*Passer domesticus*), Great egret (*Ardea alba*), Great blue heron (*Ardea herodias*), lesser goldfinch (*Carduelis psaltria*), red-tailed hawk (*Buteo jamaicensis*), and Anna's hummingbird (*Calypte anna*). Animals expected to be present within the Study Area may include animals such as California ground squirrel (*Spermophilus beecheyi*), Audubon's cottontail (*Sylvilagus audubonii*), and occasionally, coyote (*Canis latrans*), and reptiles such as side-blotched lizard (*Uta stansburiana*) and gopher snake (*Pituophis catenifer*).

No special-status species were observed during the site visits. Migratory birds may occur during nesting season, particularly small raptors, humming birds and others, may occur in during the spring and summer nesting season in the trees within the Project site. Burrowing owls (Athene cunicularia) could be present within the site as well. A pre-construction survey will be conducted to ensure avoidance of migratory birds. See mitigation measures BIO-2 and BIO-3 in the enclosed CEQA Mitigation Measures.

CONSTRUCTION

Construction is anticipated to begin in November 2018 and last approximately 13 months, ending in December 2019. The number of personnel active on site during the construction period will vary but is anticipated that no more than five to 20 workers would be present at any given time, along with equipment consisting of heavy equipment and work trucks. Typical equipment to be used during site preparation consists of dump trucks, dozers, and rubber-tire loaders. During construction, typical equipment to be used includes excavators, dump trucks, dozers, rubber-tire loaders, and scrapers. Pavers and rollers will be used during the paving phase. Site clean-up will involve use of dump trucks, rubber-tire dozers, and rubber-tire loaders. Approximately 83,540 cubic yards of material will be excavated, of which 66,680 cubic yards will be exported offsite. The balance of material excavated, amounting to 16,860 cubic yards, will be re-used onsite.

Activities during the construction period include basin excavation, backfill, placement of riprap, placement of concrete and appurtenant structures. Materials to be used during construction and discharged into jurisdictional areas include riprap, native soil and concrete. Construction is expected to be active within the work areas for eight hours per day, five days per week. Fugitive dust control will be managed by water truck to be applied a minimum of three times daily. Pollutants include vehicular-related substances temporarily present during construction. Over the long-term, the jurisdictional areas may be subject to common pollutants generated from surrounding residential areas associated with Lakeland Village (same state as currently present).

PROJECT IMPACTS

Impacts to Jurisdictional Areas

Construction impacts to jurisdictional resources include site preparation/grading, paving, and site clean-up. According to the Jurisdictional Delineation report for the Project, construction activities will result in permanent impacts to 0.04 acre and 550 linear feet of non-vegetated, ephemeral non-wetland Waters of the U.S. mapped on-site (Table 2). A total of 0.36 acre of CDFW jurisdiction is present and would be impacted within the Project consisting of 0.17 acre of streambed and 0.19 acre of riparian vegetation near Maiden Lane. These areas will also be addressed in a MSHCP Determination of Biologically Equivalent or Superior Preservation (DBESP) report, to be submitted to the U.S. Fish and Wildlife Service and the California Department of Fish and Wildlife. Refer to Figure 6 of the Jurisdictional Delineation.

Table 2. Jurisdictional Area and Impact Summary

Jurisdictional Features	Corps/Regional Board Non-Wetland Waters			CDFW Jurisdiction		
	Onsite Jurisdiction Acres (Feet)	Jurisdictional Impact Acres (Feet)		Onsite Jurisdiction Acres (Feet)	Jurisdictional Impact Acres (Feet)	
		Permanent	Temporary		Permanent	Temporary
Ephemeral Drainage	0.04 (550)	0.04 (550)		0.17 (550)	0.17 (550)	
Riparian Habitat				0.19 (100)	0.19/100	
TOTAL	**0.04 (550)**	**0.04 (550)**		**0.36 (650)**	**0.36 (650)**	

The ephemeral drainages within the Project area are either identified as unnamed tributaries on the USGS topographic 7.5-minute quadrangle "Lake Elsinore, California" (USGS 1981). These unnamed tributaries enter into channels within residential areas in Lakeland Village; however, they do not have any connectivity with Lake Elsinore.

Riparian Habitat Impacts

Southern willow scrub at the northern end of Maiden Lane would be impacted by the project, accounting for approximately 0.19 acre and 200 linear feet of habitat. This area would be permanently impacted by placement of the Proposed Project outlet structure. The Project will impact

14 Gooding's black willows (ranging from 8 to 12 inches in diameter) and 2 Fremont cottonwoods (ranging from 10 to 22 inches in diameter). A couple of mule fat shrubs would also be impacted, along with herbaceous understory that is primarily non-native. Impacts to the riparian habitat are being addressed in a MSHCP Determination of Biologically Equivalent or Superior Preservation (DBESP) report, to be processed through the U.S. Fish and Wildlife Service and the California Department of Fish and Wildlife.

The riparian vegetation does not support endangered/threatened species or species of concern. Indirect or direct impacts to wildlife habitat within Lake Elsinore are not expected as a result of this Project. Limited impacts to wildlife are anticipated during construction to local species associated with urban and rural environments of Lakeland Village. Once construction has been completed, and impacted areas have been re-contoured to their previous condition, wildlife use is expected to return to normal.

MAINTENANCE

Once construction is completed, maintenance activities for the basin, pipelines and project appurtenances will be conducted by the District. Maintenance of the basin and inlet outlet areas will include vegetation management, scarifying, sediment removal, erosion repair, and roadway and structural repair as needed. Routine maintenance is expected to occur annually, last approximately two weeks during each event and consists of the use of tractors, discs, mowers, water trucks, and hand-held tools/machinery. More frequent maintenance may be needed following storm events. See Attachment D to the notification for further details regarding the maintenance of this facility.

AVOIDANCE, MINIMIZATION, OR MITIGATION

Project Design Features

The Project will collect and re-direct storm flows from an area within Lakeland Village that currently contains no biofiltration and direct them into the proposed Sediment basin that would result in a beneficial impact by improving the water quality of the runoff from the existing urban areas to Lake Elsinore. Additionally, construction of the sediment basin will result in the creation of approximately 0.40 acres of new streambed and approximately 1 acre of basin side slopes will be seeded with native grasses.

Best Management Practices

The Proposed Project construction activities will conform to the applicable requirements of the National Pollutant Discharge Elimination System (NPDES) General Permit for Stormwater Discharges Associated with Construction and Land Disturbance Activities (Order No. 2012-006-DWQ or the latest approved general permit). This Construction General Permit requires construction activities that involve the disturbance of one acre or more of total land area to include the preparation and implementation of a Stormwater Pollution Prevention Plan (SWPPP), which contains Best

Management Practices (BMPs) to reduce or eliminate construction-related pollutants in the runoff. The SWPPP will be prepared prior to construction and include the applicable BMPs for the Proposed Project site. The District is the Principle Permittee and complies with the requirements of the 2010 SAR MS4 Permit during the construction, operation, and maintenance of its Watershed Protection projects.

Mitigation

To mitigate for Permanent impacts to 0.17 acres of ephemeral jurisdictional drainages, the District is proposing to re-vegetate the impacted areas with a native grasses. Any restored areas will provide biological, hydrological, and biogeochemical functions to a level consistent with those being lost on-site and will retain similar or better functions or values. Additionally, construction of the sediment basin will result in the creation of approximately 0.40 acres of new streambed and approximately 1 acre of basin side slopes will also be seeded with native grasses.

To Mitigate for Permanent impacts to approximately 0.19 acres of riparian vegetation adjacent to Lake Elsinore, the District is proposing to conduct habitat enhancement (i.e. invasive vegetation management) on 0.40 acres within APN 957-330-029 of the District's existing Santa Gertrudis Valley – Tucalota Creek flood control channel. See Figure 7 of the enclosed CD for the location of the habitat enhancement area. The habitat enhancement will be carried out by the Elsinore-Murrieta-Anza Resource Conservation District (a.k.a. Team RCD) for a period of 5 years through an agreement with the District.

CONCLUSION

Thank you for your review of the enclosed Streambed Alteration Agreement notification package. The following supporting documents are enclosed on CD:

1. Project site figures and photos (ECORP Consulting, Inc.)
   - Fig 1. Regional Map
   - Fig 2. Vicinity Map
   - Fig 3. Watersheds
   - Fig 4. National Wetland Inventory
   - Fig 5. Soil Types
   - Fig 6. Wetland Delineation
   - Fig 7. Proposed Habitat Enhancement Area
   - Photos of Drainages ES-1 and ES-2
2. Biological Report (ECORP Consulting, Inc., dated October 2014)
3. Jurisdictional Delineation Report (ECORP Consulting, Inc., dated January 2018)
4. CEQA Documents
   - Final Programmatic EIR for the Lakeland Village MDP (RCFC&WCD, dated March 2015)
   - Final Addendum to the Programmatic EIR: Lakeland Village MDP Line H, Stage 1 (RCFC&WCD, dated February 2018)
   - Final Notice of Determination and Fish and Game Filing Fees

5. Project Plan and Drawings (RCFC&WCD, dated November 2017)
6. Notification Of Lake or Streambed Alteration Application Form
7. Warrant No. 0503658092 in the amount of $6,659.50 for the Application Fee
8. Copy of the Section 401 and 404 Cover Letters and Application Forms

If you have any questions regarding the above information, please do not hesitate to contact Jason Swenson (jdswenso@rivco.org) at the District at (951) 955-8082 or call me (staylor@ecorpconsulting.com) at (909) 307-0046.

Sincerely,

ECORP Consulting, Inc.

Scott Taylor
Senior Biologist/Regulatory Permitting Manager

cc: Jason Bill, Santa Ana Regional Water Quality Control Board
James Mace, U.S. Army Corps of Engineers

FOR DEPARTMENT USE ONLY				
Date Received	Amount Received	Amount Due	Date Complete	Notification No
	$	$		
Assigned to				

NOTIFICATION OF LAKE OR STREAMBED ALTERATION

Complete EACH field, unless otherwise indicated, following the enclosed instructions and submit ALL required enclosures. Attach additional pages, if necessary.

1. APPLICANT PROPOSING PROJECT

Name	Jason Uhley		
Business/Agency	Riverside County Flood Control and Water Conservation District		
Mailing Address	1995 Market Street		
City, State, Zip	Riverside, CA 92501		
Telephone	(951) 955-1250	Fax	(951) 788-9965
Email	juhley@rivco.org		

2. CONTACT PERSON (*Complete only if different from applicant*)

Name	Scott Taylor, ECORP Consulting Inc.		
Street Address	215 North Fifth Street		
City, State, Zip	Redlands, CA 92374		
Telephone	(909) 307-0046	Fax	(909) 307-0056
Email	staylor@ecorpconsulting.com		

3. PROPERTY OWNER (*Complete only if different from applicant*)

Name	N/A		
Street Address			
City, State, Zip			
Telephone		Fax	
Email			

4. PROJECT NAME AND AGREEMENT TERM

A. Project Name		Lakeland Village Master Drainage Plan Line H, Stage 1		
B. Agreement Term Requested		☑ Regular (*5 years or less*) ☐ Long-term (*greater than 5 years*)		
C. Project Term		D. Seasonal Work Period		E. Number of Work Days
Beginning (*year*)	Ending (*year*)	Start Date (*month/day*)	End Date (*month/day*)	
2018	2023	N/A	N/A	approx. 250

5. AGREEMENT TYPE

Check the applicable box. If box B, C, D, E, or F is checked, complete the specified attachment.		
A.	☑ Standard *(Most construction projects, excluding the categories listed below)*	
B.	☐ Gravel/Sand/Rock Extraction (*Attachment A*)	*Mine I.D. Number:* _____
C.	☐ Timber Harvesting (*Attachment B*)	*THP Number:* _____
D.	☐ Water Diversion/Extraction/Impoundment (*Attachment C*)	*SWRCB Number:* _____
E.	☑ Routine Maintenance (*Attachment D*)	
F.	☐ Cannabis Cultivation (*Attachment E*)	
G.	☐ Department Grant Programs	*Agreement Number:* _____
H.	☐ Master	
I.	☐ Master Timber Operations	

6. FEES

See the current fee schedule to determine the appropriate notification fee. Itemize each project's estimated cost and corresponding fee. ***Note: The Department may not process this notification until the correct fee has been received.***

	A. Project	B. Project Cost	C. Project Fee
1	Storm Drain inlet and Outfall Structures and Grading	$169,300.00	$3,185.25
2	Routine Maintenance Attachment D		$3,474.25
3			
4			
5			
6			
7			
8			
9			
10			
		D. Base Fee *(if applicable)*	
		E. TOTAL FEE*	$6,659.50

* *Cash, check, and Visa or MasterCard payments are accepted.*

7. PRIOR NOTIFICATION AND ORDERS

A. Has a notification previously been submitted to, or a Lake or Streambed Alteration Agreement previously been issued by, the Department for the project described in this notification?

☐ Yes (*Provide the information below*) ☑ No

Applicant	Notification Number	Date

B. Is this notification being submitted in response to a court or administrative order or notice, or a notice of violation (NOV) issued by the Department?

☑ No ☐ Yes (*Enclose a copy of the order, notice, or NOV. If the applicant was directed to notify the Department verbally rather than in writing, identify the person who directed the applicant to submit this notification and the agency he or she represents, and describe the circumstances relating to the order.*)

☐ *Continued on additional page(s)*

8. PROJECT LOCATION

A. Address or description of project location.

(*Include a map that marks the location of the project with a reference to the nearest city or town, and provide driving directions from a major road or highway*)

The project alignment is generally located within existing streets. Specifically the project alignment is located in the Riverside County community of Lakeland Village within Maiden Lane, Landerville Avenue, Cottrell Boulevard, Anthony Avenue, Adelfa Street, Coleman Avenue, Zellar Street, and Gillette Street. On the USGS Quadrangle, "Lake Elsinore, California," the site is located within Township 6 South/Range 5 West/Section 24. See cover letter for additional information.

☑ *Continued on additional page(s)*

B. River, stream, or lake affected by the project. Unnamed tributary to Lake Elsinore

C. What water body is the river, stream, or lake tributary to? Lake Elsinore

D. Is the river or stream segment affected by the project listed in the state or federal Wild and Scenic Rivers Acts? ☐ Yes ☑ No ☐ Unknown

E. County Riverside

F. USGS 7.5 Minute Quad Map Name	G. Township	H. Range	I. Section	J. ¼ Section
Lake Elsinore, California	6 South	5 West	24	

☐ *Continued on additional page(s)*

K. Meridian (*check one*) ☐ Humboldt ☐ Mt. Diablo ☑ San Bernardino

L. Assessor's Parcel Number(s)

383062046, 383075004

☐ *Continued on additional page(s)*

M. Coordinates (*If available, provide at least latitude/longitude or UTM coordinates and check appropriate boxes*)			
Latitude/Longitude	*Latitude:* 33.639734	*Longitude:* 117.349560	
	☐ Degrees/Minutes/Seconds	☑ Decimal Degrees	☐ Decimal Minutes
UTM	*Easting:*	*Northing:*	☐ Zone 10 ☐ Zone 11
Datum used for Latitude/Longitude or UTM		☐ NAD 27	☑ NAD 83 or WGS 84

9. PROJECT CATEGORY

WORK TYPE	NEW CONSTRUCTION	REPLACE EXISTING STRUCTURE	REPAIR-MAINTAIN-OPERATE EXISTING STRUCTURE
Bank stabilization – bioengineering/recontouring	☐	☐	☐
Bank stabilization – rip-rap/retaining wall/gabion	☐	☐	☐
Boat dock/pier	☐	☐	☐
Boat ramp	☐	☐	☐
Bridge	☐	☐	☐
Channel clearing/vegetation management	☐	☐	☐
Culvert	☐	☐	☐
Debris basin	☐	☐	☐
Dam	☐	☐	☐
Filling of wetland, river, stream, or lake	☑	☐	☐
Geotechnical survey	☐	☐	☐
Habitat enhancement – revegetation/mitigation	☐	☐	☐
Levee	☐	☐	☐
Low water crossing	☐	☐	☐
Road/trail	☐	☐	☐
Sediment removal: pond, stream, or marina	☐	☐	☐
flood control	☑	☐	☐
Storm drain outfall structure	☑	☐	☐
Temporary stream crossing	☐	☐	☐
Utility crossing: horizontal directional drilling	☐	☐	☐
jack/bore	☐	☐	☐
open trench	☐	☐	☐
Water diversion without facility	☐	☐	☐
Water diversion with facility	☐	☐	☐
Other *(specify)*:	☐	☐	☐

10. PROJECT DESCRIPTION

A. Describe the project in detail. Include photographs of the project location and immediate surrounding area.

- Written description of all project activities with detailed step-by-step description of project implementation.
- Include any structures (e.g., rip-rap, culverts) that will be placed or modified in or near the stream, river, or lake, and any channel clearing.
- Specify volume, and dimensions of all materials and features (e.g., rip rap fields) that will be used or installed.
- If water will be diverted or drafted, specify the purpose or use.
- Enclose diagrams, drawings, plans, and maps that provide all of the following: site specific construction details; dimensions of each structure and/or extent of each activity in the bed, channel, bank or floodplain; overview of the entire project area (i.e., "bird's-eye view") showing the location of each structure and/or activity, significant area features, stockpile areas, areas of temporary disturbance, and where the equipment/machinery will access the project area.

The Proposed Project would consist of construction, operation and maintenance of a new underground storm drain system with some aboveground at inlets and outlets and a mostly earthen sediment basin, in the Riverside County community of Lakeland Village. The Proposed Project is intended to alleviate flooding in the community of Lakeland Village. Please refer to the cover letter for additional detail. The Proposed Project plans are included within the attached CD for this notification.

☑ *Continued on additional page(s)*

B. Specify the equipment and machinery that will be used to complete the project.

Dump trucks, dozers, and rubber-tire loaders during site preparation. During construction, typical equipment to be used includes excavators, dump trucks, dozers, rubber-tire loaders, and scrapers. Pavers and rollers will be used during the paving phase. Site clean-up will involve use of dump trucks, rubber-tire dozers, and rubber-tire loaders.

☐ *Continued on additional page(s)*

C. Will water be present during the proposed work period (specified in box 4.D) in the stream, river, or lake (specified in box 8.B).	☐ Yes ☑ No (*Skip to box 11*)
D. Will the proposed project require work in the wetted portion of the channel?	☐ Yes (*Enclose a plan to divert water around work site*) ☑ No

11. PROJECT IMPACTS

A. Describe impacts to the bed, channel, and bank of the river, stream, or lake, and the associated riparian habitat. Specify the dimensions of the modifications in length (linear feet) and area (square feet or acres) and the type and volume of material (cubic yards) that will be moved, displaced, or otherwise disturbed, if applicable.

Construction impacts to jurisdictional resources include site preparation/grading, paving, and site clean-up.The project would impact 0.17 acre and 550 linear feet of streambed (unnamed ephemeral stream) tributary to Lake Elsinore, where an inlet and Line H-2 storm drain would be constructed. In addition, a portion of Line H plus an outlet structure would impact 0.19 acre of riparian vegetation (approximately 200 linear feet) in association with Lake Elsinore, below the 100-year flood limit but above the mean average lake elevation.

☐ *Continued on additional page(s)*

B. Will the project affect any vegetation? ☑ Yes (*Complete the tables below*) ☐ No (*Include aerial photo with date supporting this determination*)

Vegetation Type	Temporary Impact	Permanent Impact
Southern willow scrub	Linear feet: ____ Total area: ____	Linear feet: 200 Total area: 0.19
Non-native Grassland	Linear feet: ____ Total area: ____	Linear feet: 550 Total area: 0.17

Tree Species	Number of Trees to be Removed	Trunk Diameter (range)
Salix goodingii	14	8 to 12 inches
Populus fremontii	2	14 to 22 inches

☐ *Continued on additional page(s)*

C. Are any special status animal or plant species, or habitat that could support such species, known to be present on or near the project site?

☐ Yes (*List each species and/or describe the habitat below*) ☑ No ☐ Unknown

☐ *Continued on additional page(s)*

D. Identify the source(s) of information that supports a "yes" or "no" answer above in Box 11.C.

Biological report for project, CNDDB records, focused survey results

☐ *Continued on additional page(s)*

E. Has a biological study been completed for the project site?

☑ Yes (*Enclose the biological study*) ☐ No

Note: A biological assessment or study may be required to evaluate potential project impacts on biological resources.

F. Has a hydrological study been completed for the project or project site?

☐ Yes (*Enclose the hydrological study*) ☑ No

Note: A hydrological study or other information on site hydraulics (e.g., flows, channel characteristics, and/or flood recurrence intervals) may be required to evaluate potential project impacts on hydrology.

G. Have fish or wildlife resources or waters of the state been mapped or delineated on the project site?

☑ Yes (*Enclose the mapped results*) ☐ No

Note: Check "yes" if fish and wildlife resources or waters of the state on the project site have been mapped or delineated. "'Wildlife' means and includes all wild animals, birds, plants, fish, amphibians, reptiles and related ecological communities, including the habitat upon which the wildlife depends." (Fish & G. Code, § 89.5.) If "yes" is checked, submit the mapping or delineation. If the mapping or delineation is in digital format (e.g., GIS shape files or KMZ), you must submit the information in this format for the Department to deem your notification complete. If "no" is checked, or the resolution of the mapping or delineation is insufficient, the Department may request mapping or delineation (in digital or non-digital format), or higher resolution mapping or delineation for the Department to deem the notification complete.

12. MEASURES TO PROTECT FISH, WILDIFE, AND PLANT RESOURCES

A. Describe the techniques that will be used to prevent sediment from entering watercourses during and after construction.

See the cover letter for this notification

☑ *Continued on additional page(s)*

B. Describe project avoidance and/or minimization measures to protect fish, wildlife, and plant resources.

See the cover letter for this notification

☑ *Continued on additional page(s)*

C. Describe any project mitigation and/or compensation measures to protect fish, wildlife, and plant resources.

See the cover letter for this notification

☑ *Continued on additional page(s)*

13. PERMITS

List any local, State, and federal permits required for the project and check the corresponding box(es). Enclose a copy of each permit that has been issued.

A. Section 401 Water Quality Certification ☑ Applied ☐ Issued

B. Section 404 Nationwide Permit Application (Nationwide Permit 43) ☑ Applied ☐ Issued

C. _____ ☐ Applied ☐ Issued

D. Unknown whether ☐ local, ☐ State, or ☐ federal permit is needed for the project. (*Check each box that applies*)

☐ *Continued on additional page(s)*

14. ENVIRONMENTAL REVIEW

A. Has a draft or final document been prepared for the project pursuant to the California Environmental Quality Act (CEQA) and/or National Environmental Protection Act (NEPA)?

☑ Yes (*Check the box for each CEQA or NEPA document that has been prepared and enclose a copy of each.*)

☐ No (*Check the box for each CEQA or NEPA document listed below that will be or is being prepared.*)

☐ Notice of Exemption	☐ Mitigated Negative Declaration	☐ NEPA document (*type*):
☑ Initial Study	☑ Environmental Impact Report	
☐ Negative Declaration	☑ Notice of Determination (*Enclose*)	
☐ THP/ NTMP	☑ Mitigation, Monitoring, Reporting Plan	

B. State Clearinghouse Number (*if applicable*)	2011091017
C. Has a CEQA lead agency been determined?	☑ Yes (*Complete boxes D, E, and F*) ☐ No (*Skip to box 14.G*)
D. CEQA Lead Agency	Riverside County Flood Control and Water Conservation District
E. Contact Person	Randy Sheppeard
F. Telephone Number	(951) 955-1306

G. If the project described in this notification is not the "whole project" or action pursuant to CEQA, briefly describe the entire project (Cal. Code Regs., tit. 14, § 15378).

This Project is part of the Lakeland Village Master Drainage Plan (MDP) for which a Final Program Environmental Impact Report (Final PEIR) was prepared and certified in 2015. An Addendum PEIR was completed for this Project and is referenced above. See the cover letter for this notification for further details.

☑ *Continued on additional page(s)*

H. Has a CEQA filing fee been paid pursuant to Fish and Game Code section 711.4?

☑ Yes (*Enclose proof of payment*) ☐ No (*Briefly explain below the reason a CEQA filing fee has not been paid*)

Note: If a CEQA filing fee is required, the Lake or Streambed Alteration Agreement may not be finalized until paid.

15. SITE INSPECTION

Check one box only.

☑ In the event the Department determines that a site inspection is necessary, I hereby authorize a Department representative to enter the property where the project described in this notification will take place at any reasonable time, and hereby certify that I am authorized to grant the Department such entry.

☐ I request the Department to first contact (*insert name*) _____ at (*insert telephone number*) _____ to schedule a date and time to enter the property where the project described in this notification will take place. I understand that this may delay the Department's determination as to whether a Lake or Streambed Alteration Agreement is required and/or the Department's issuance of a draft agreement pursuant to this notification.

16. DIGITAL FORMAT

Is any of the information included as part of the notification available in digital format (i.e., CD, DVD, etc.)?

☑ Yes (Please enclose the information via digital media with the completed notification form)

☐ No

17. SIGNATURE

I hereby certify that to the best of my knowledge the information in this notification is true and correct and that I am authorized to sign this notification as, or on behalf of, the applicant. I understand that if any information in this notification is found to be untrue or incorrect, the Department may suspend processing this notification or suspend or revoke any draft or final Lake or Streambed Alteration Agreement issued pursuant to this notification. I understand also that if any information in this notification is found to be untrue or incorrect and the project described in this notification has already begun, I and/or the applicant may be subject to civil or criminal prosecution. I understand that this notification applies only to the project(s) described herein and that I and/or the applicant may be subject to civil or criminal prosecution for undertaking any project not described herein unless the Department has been separately notified of that project in accordance with Fish and Game Code section 1602 or 1611.

_____ _____
Signature of Applicant or Applicant's Authorized Representative Date

_____
Print Name

APPENDIX "F"

NATIONWIDE PERMIT
(SPL-2018-00245-MY)

404 PERMIT

DEPARTMENT OF THE ARMY
U.S. ARMY CORPS OF ENGINEERS, LOS ANGELES DISTRICT
915 WILSHIRE BOULEVARD, SUITE 930
LOS ANGELES, CALIFORNIA 90017

October 6, 2021

SUBJECT: Nationwide Permit (NWP) Verification

Jason Uhley
Riverside County Flood Control District
1995 Market Street
San Bernardino, California 92501

Dear Mr. Uhley:

I am responding to your request (SPL-2018-00245-MY) for a Department of the Army permit for your proposed project, Lakeland Village MDP Line H Stage 1 Project. The proposed project is located within the city of Lakeland Village, Riverside County, California (Lat: 33.639734, Long: -117.349560). The proposed project would consist of construction, operation, and maintenance of a new underground storm drain system, with some aboveground structures at inlets and outlets, and an earthen sediment basin. The purpose is to collect and convey storm flows from an area within Lakeland Village and direct them into the proposed sediment basin to improve the water quality of the runoff from existing urban areas to Lake Elsinore.

Because this project would result in a discharge of fill material into waters of the U.S., a Department of the Army permit is required pursuant to Section 404 of the Clean Water Act (33 USC 1344; 33 CFR parts 323 and 330).

I have determined construction of your proposed project, if constructed as described in your application, would comply with Nationwide Permit (NWP) 43: Stormwater Management Facilities. Specifically, and as shown on the enclosed Figures 2-6, dated October 2014, you are authorized to:

1. Permanently discharge earthen fill material into approximately 0.04 acre (550 linear feet) of non-wetland waters, in association with the construction of a new underground storm drain system and sediment basin, in the Riverside County community of Lakeland Village.

For this NWP verification letter to be valid, you must comply with all of the terms and conditions in Enclosure 1. Furthermore, you must comply with the non-discretionary Special Conditions listed below:

1. Pursuant to 36 C.F.R. section 800.13, in the event of any discoveries during construction of either human remains, archeological deposits, or any other type of historic property,

the Permittee shall notify the Corps' Archeology Staff within 24 hours (Danielle Storey at 213-452-3855 OR Meg McDonald at 213-452-3849). The Permittee shall immediately suspend all work in any area(s) where potential cultural resources are discovered. The Permittee shall not resume construction in the area surrounding the potential cultural resources until the Corps Regulatory Division re-authorizes project construction, per 36 C.F.R. section 800.13.

2. Within 45 calendar days of completion of authorized work in waters of the United States, the Permittee shall submit to the Corps Regulatory Division a post-project implementation memorandum including the following information:
   A) Date(s) work within waters of the United States was initiated and completed;
   B) Summary of compliance status with each special condition of this permit (including any noncompliance that previously occurred or is currently occurring and corrective actions taken or proposed to achieve compliance);
   C) Color photographs (including map of photopoints) taken at the project site before and after construction for those aspects directly associated with permanent impacts to waters of the United States such that the extent of authorized fills can be verified;
   D) One copy of "as built" drawings for the entire project. Electronic submittal (Adobe PDF format) is preferred. All sheets must be signed, dated, and to scale. If submitting paper copies, sheets must be no larger than 11 x 17 inches; and
   E) Signed Certification of Compliance (attached as part of this permit package).

This verification is valid through March 14, 2026. If on March 14, 2026 you have commenced or are under contract to commence the permitted activity you will have an additional twelve (12) months to complete the activity under the present NWP terms and conditions. However, if I discover noncompliance or unauthorized activities associated with the permitted activity I may request the use of discretionary authority in accordance with procedures in 33 CFR part 330.4(e) and 33 CFR part 330.5(c) or (d) to modify, suspend, or revoke this specific verification at an earlier date. Additionally, at the national level the Chief of Engineers, any time prior to March 18, 2022, may choose to modify, suspend, or revoke the nationwide use of a NWP after following procedures set forth in 33 CFR part 330.5. It is incumbent upon you to comply with all of the terms and conditions of this NWP verification and to remain informed of any change to the NWPs.

A NWP does not grant any property rights or exclusive privileges. Additionally, it does not authorize any injury to the property, rights of others, nor does it authorize interference with any existing or proposed Federal project. Furthermore, it does not obviate the need to obtain other Federal, state, or local authorizations required by law.

Thank you for participating in the Regulatory Program. If you have any questions, please contact Miriam Yemane at (213) 452-3411 or via e-mail at Miriam.Yemane@usace.army.mil. Please help me to evaluate and improve the regulatory experience for others by completing the customer survey form at http://corpsmapu.usace.army.mil/cm_apex/f?p=regulatory_survey.

Sincerely,

Kyle Dahl
Chief, San Diego & Imperial Counties Section
Regulatory Division

Enclosures

LOS ANGELES DISTRICT
U.S. ARMY CORPS OF ENGINEERS

CERTIFICATE OF COMPLIANCE WITH DEPARTMENT OF THE ARMY NATIONWIDE PERMIT

Permit Number: *SPL-2018-00245*

Name of Permittee: *Jason Uhley, Riverside County Flood Control District*

Date of Issuance: *October 6, 2021*

Upon completion of the activity authorized by this permit and the mitigation required by this permit, sign this certificate, and return it by **ONE** of the following methods;

1) Email a digital scan of the signed certificate to Miriam.Yemane@usace.army.mil

OR

2) Mail the signed certificate to

U.S. Army Corps of Engineers
ATTN: Regulatory Division SPL-2018-00245
915 WILSHIRE BOULEVARD, SUITE 930
LOS ANGELES, CALIFORNIA 90017

I hereby certify that the authorized work and any required compensatory mitigation has been completed in accordance with the NWP authorization, including all general, regional, or activity-specific conditions. Furthermore, if credits from a mitigation bank or in-lieu fee program were used to satisfy compensatory mitigation requirements I have attached the documentation required by 33 CFR 332.3(l)(3) to confirm that the appropriate number and resource type of credits have been secured.

_____ _____

Signature of Permittee Date

Location: N:\2011\2011-155 Riverside County Flood Control MSA\003 Lakeland Village MDP Line H\MAPS\Location_Vicinity\LL_Vicinity_vec.mxd (mquidry)-mquidry 4/21/2014

Map Date: 4/21/2014

Service Layer Credits: Sources: USGS, ESRI, TANA, AND

ECORP Consulting, Inc.
ENVIRONMENTAL CONSULTANTS

Figure 1. Project Vicinity

2011-155.003 Lakeland Village MDP Line H.

RIVERSIDE COUNTY FLOOD CONTROL
AND WATER CONSERVATION DISTRICT

Lakeland Village MDP - Line H
Project No. 3-0-0020

Figure 2

Legend

Project Alignment

Basin Location

N
W E
S

NTS

Figure 3. Watersheds

Delineation Area

HUC 12 Watersheds

ECORP Consulting, Inc.
ENVIRONMENTAL CONSULTANTS

2011-155.003 Lakeland Village MDP Line H, Stage 1 Project

Miles
0 1

Photo Source: NAIP 2012

Map Date: 9/29/2014

Location: N:\2011\2011-155 Riverside County Flood Control MDP\Lake Village MDP Line H\MXD\Hydro\HUC\LL_HUC.mxd /modified/yesterday 8/12/2017

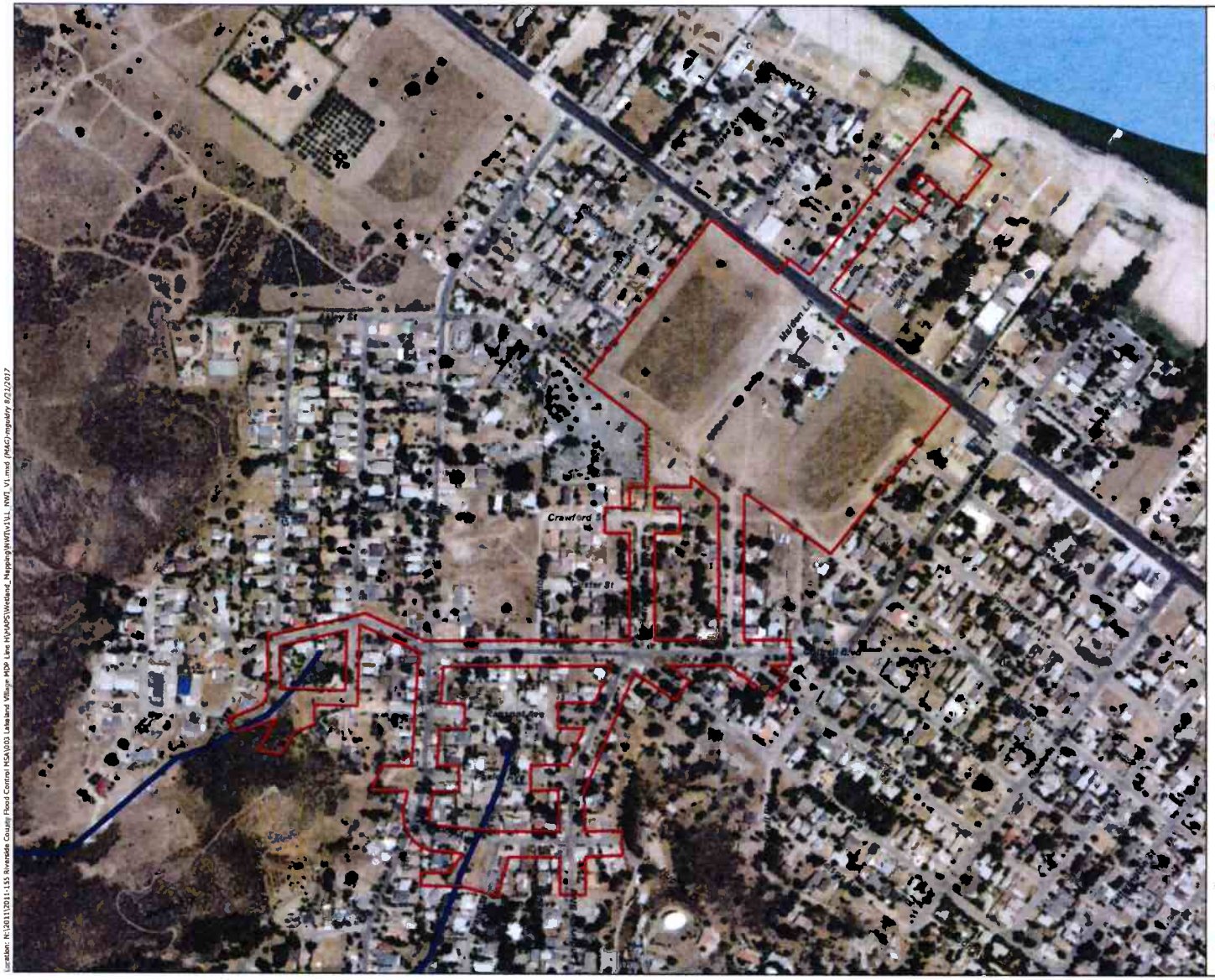

Figure 4.
National Wetland Inventory

Map Features

Delineation Area

NWI Type

Lake

Riverine

ECORP Consulting, Inc.
ENVIRONMENTAL CONSULTANTS

2011-155.003 Lakeland Village MDP Line H, Stage 1 Project

Photo Source: NAIP 2016

Map Date: 8/21/2017

Location: N:\2011\2011-155 Riverside County Flood Control MSA\003 Lakeland Village MDP Line H\MAPS\Wetland_Mapping\NWI\v1\LL_NWI_V1.mxd (MAG)-mgudry 8/21/2017

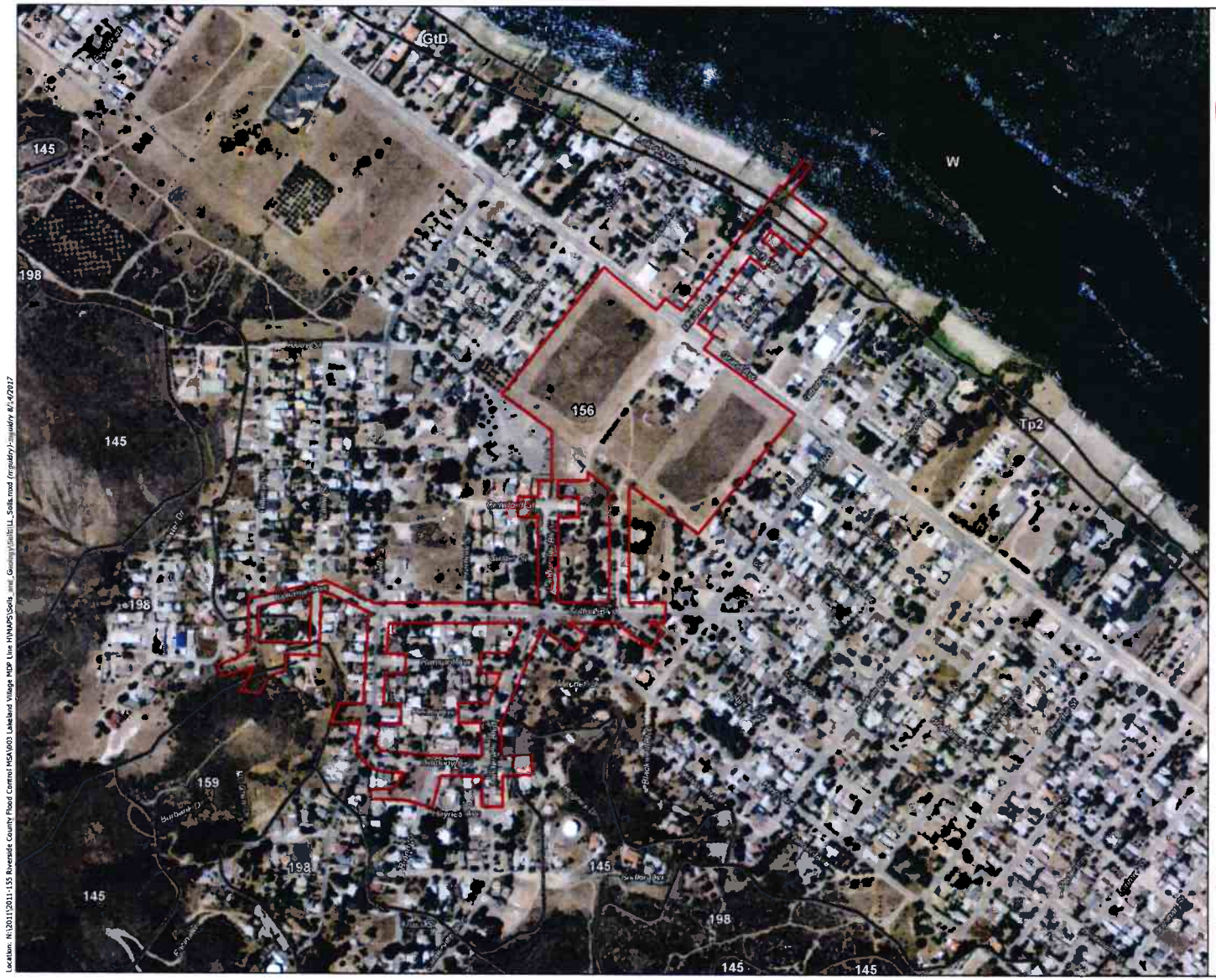

Figure 5. NRCS SSURGO Soil Types

Delineation Area

Series Number - Series Name

145 - Cieneba-rock outcrop complex, 30 to 75 percent slopes

156 - Hanford sandy loam, 2 to 9 percent slopes

159 - Las Posas gravelly loam, 15 to 50 percent slopes

198 - Soboba cobbly loamy sand, 0 to 15 percent slopes

GtD - Grangeville fine sandy loam, drained, 5 to 15 percent s lopes

Tp2 - Traver loamy fine sand, eroded

W - Water

Natural Resources Conservation Service (NRCS) Soil Survey Geographic (SSURGO) Database for Riverside County, CA

ECORP Consulting, Inc.
ENVIRONMENTAL CONSULTANTS

Location: N:\2011\2011-155 Riverside County Flood Control HSA\903 Lakeland Village MDP Line H\MXD\Soils_and_Geology\Delile\LL_Soils.mxd (mpulsky) mpulsky 8/14/2017

2011-155.003 Lakeland Village MDP Line H, Stage 1 Project

Scale in Feet
0 1,000

Photo Source: NAIP 2012

Map Date: 9/29/2014

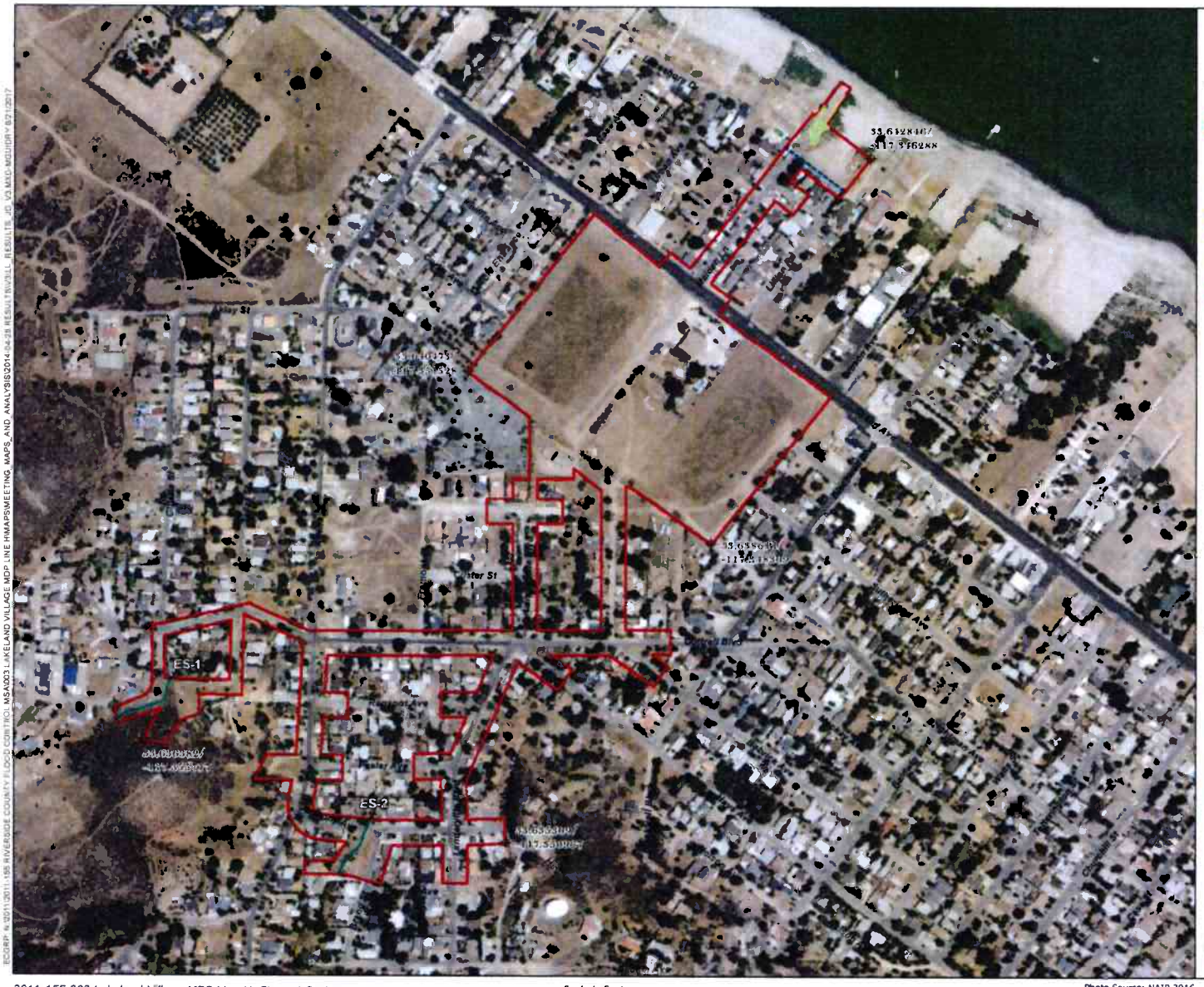

Figure 6.
Wetland Delineation

Map Features

- Delineation Area
- Reference Coordinate (NAD83)
- 100-Year Floodplain

Waters of the US [1*]

- Ephemeral Stream (0.04 acres)

CDFW Jurisdiction

- Southern Willow Scrub (0.19 acres)
- Streambed (0.17 acres)

[1] Subject to U.S. Army Corps of Engineers verification. This exhibit depicts information and data produced in accord with the wetland delineation methods described in the 1987 Corps of Engineers Wetland Delineation Manual and the Regional Supplement to the Corps of Engineers Wetland Delineation Manual: Arid West Region Version 2.0 as well as the Updated Map and Drainage Standards for the South Pacific Division Regulatory Program as amended on February 10, 2016, and conforms to Los Angeles District specifications. However, feature boundaries have not been legally surveyed and may be subject to minor adjustments if more accurate locations are required.

* The acreage value for each feature has been rounded to the nearest 1/1000 decimal. Summation of these values may not equal the total potential Waters of the U.S. acreage reported.

Service Layer Credits: Copyright © 2013 National Geographic Society, i-cubed

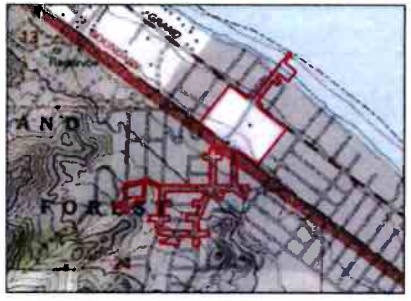

ECORP Consulting, Inc.
ENVIRONMENTAL CONSULTANTS

2011-155.003 Lakeland Village MDP Line H, Stage 1 Project

Scale in Feet
0 300

Photo Source: NAIP 2016
Boundary Source: Riverside County Flood Control
Delineator: Scott Taylor
Coordinate System: NAD 1983 StatePlane California VI FIPS 0406 Feet

Map Date: 8/21/2017

APPENDIX "G"

SANTA ANA REGIONAL WATER QUALITY CONTROL BOARD (SARWQCB)

401 WATER QUALITY CERTIFICATION

CALIFORNIA
Water Boards

Santa Ana Regional Water Quality Control Board

December 27, 2018

Mr. Jason Uhley
Riverside County Flood Control
1995 Market Street
Riverside CA 92501

Dear Mr. Uhley:

RE: CLEAN WATER ACT SECTION 401 WATER QUALITY CERTIFICATION AND ORDER FOR THE LAKELAND VILLAGE MDP LINE H STAGE 1(SARWQCB WDID # 332018-03)

Enclosed please find a Clean Water Act Section 401 Water Quality Certification and Order, authorized by Santa Ana Regional Water Quality Control Board Executive Officer, Hope Smythe. This Order is issued to Riverside County Flood Control for Lakeland Village MDP Line H, Stage 1 (Project). Attachments A through C of the Enclosure are also part of the Order.

This Order is issued in response to an application submitted by Riverside County Flood Control for proposed Project discharge to waters of the State to ensure that the water quality standards for all waters of the State impacted by the Project are met. You may proceed with your Project according to the terms and conditions of the enclosed Order.

If you require further assistance, please contact me by phone at (951) 321-4584 or by email at Marc.Brown@waterboards.ca.gov . You may also contact David Woelfel, Chief of Regional Planning Programs Section, by phone at (951) 782-7960 or by email at David.Woelfel@waterboards.ca.gov.

Sincerely,

David G. Woelfel
for

Marc Brown
Environmental Scientist
Regional Planning Unit
Santa Ana Regional Water Quality Control Board

Enclosures (1): Order for Lakeland Village MDP Line H Stage 1

cc: [Via email only] (w/ enclosure):

U.S Army Corps of Engineers, South Coast Branch – Crystel Doyle – Crystel.L.Doyle@usace.army.mil
U.S. Environmental Protection Agency, Region 9 – Wetlands Section –
Megan Fitzgerald – Fitzgerald.Megan@epa.gov
Melissa Scianni -- Scianni.Melissa@epa.gov
California Department of Fish and Wildlife -- Kimberly Freeburn Marquez – Kim.Freeburn@wildlife.ca.gov
State Water Resource Control Board, Office of Chief Counsel -- Teresita Sablan – Teresita.Sablan@waterboards.ca.gov
State Water Resources Control Board, Division of Water Quality -- Water Quality Certification Unit
Santa Ana Regional Water Quality Control Board – David Woelfel
ECORP Consulting, Inc. - Scott Taylor – staylor@ecorpconsulting.com

Water Boards

Santa Ana Regional Water Quality Control Board

CLEAN WATER ACT SECTION 401 WATER QUALITY CERTIFICATION AND ORDER

Effective Date:	December 27, 2018	Reg. Meas. ID:	419463
		Place ID:	844742
Program Type:	Fill/Excavation	SARWQCB WDID:	332018-03
		USACE #:	SPL-2018-00245

Project Type: Storm Drain System Construction and Maintenance

Project: Lakeland Village MDP Line H, Stage 1 (Project)

Federal Permit: United States Army Corps of Engineers (USACE) Nationwide Permit (NWP) 43, Storm Water Management Facilities

Applicant: Riverside County Flood Control and Water Conservation District

Applicant Contact: Randy Sheppeard
Senior Flood Control Planner
Riverside County Flood Control and Water Conservation District
1995 Market Street
Riverside, CA 92501
Phone: (951) 955-1306
Email: rsheppea@rivco.org

Water Board Staff: Marc Brown
Environmental Scientist
3737 Main Street, Suite 500
Riverside, CA 92501
Phone: (951) 321-4584
Email: Marc.Brown@waterboards.ca.gov

Water Board Contact Person:
If you have any questions, please call Santa Ana Regional Water Quality Control Board (Santa Ana Water Board) Staff listed above or (951) 782-4130 and ask to speak with the Regional Planning Programs Section Chief.

Table of Contents

I. Order

This Clean Water Act (CWA) section 401 Water Quality Certification action and Order (Order) is issued at the request of Riverside County Flood Control and Water Conservation District (herein after Permittee) for the Project. This Order is for the purpose described in the application submitted by the Permittee. The application was received on February 6, 2018. The application was deemed complete on March 6, 2018. Santa Ana Water Board staff requested additional information necessary to supplement the contents of the complete application, and the Permittee responded to the request for supplemental information as summarized in Table 1.

Table 1: Record of Supplemental Application Information

Date of Request for Supplemental Information	Date Requested Information Received
7/18/2018	7/30/2018

II. Public Notice

The Santa Ana Water Board provided public notice of the application pursuant to California Code of Regulations, Title 23, section 3858 from February 6, 2018 to effective date of the Order. The Santa Ana Water Board did not receive any comments during the comment period.

III. Project Purpose

The Project involves a proposed storm drain that would alleviate flooding in the area, which currently lacks the infrastructure to convey significant storm water flows. The proposed basin will also temporarily detain peak flows, enhance infiltration of urban runoff, and reduce sediment discharges into Lake Elsinore from an area without existing water quality treatment.

IV. Project Description

The Project would consist of construction, operation, and maintenance of a new underground storm drain system with some aboveground structures at inlets and outlets and a mostly earthen sediment basin. The proposed storm drain system would convey flows from 0.02 acre of jurisdictional Waters of the U.S. within two ephemeral jurisdictional drainages and route them into an underground storm drain to the proposed basin adjacent to Maiden Lane. The proposed basin would temporarily detain peak storm flows from the storm drain system and discharge them back into the main line within Maiden Lane where they will still outlet into Lake Elsinore. The Project includes seeding earthen jurisdictional areas with native seed mix in order to enhance the jurisdictional areas at the pick-up points. Additionally, excavation of the basin from a disturbed upland area will result in creation of approximately 0.44 acre of earthen basin bottom. Since the earthen basin will convey freshwater flow during a portion of the year, it will provide the same or better functions as the existing open channel jurisdictional areas. The storm drain pick-up points and basin will be maintained, and invasive vegetation will be monitored and removed for five (5) years following construction. Maintenance activities will be performed post-construction on an as-needed basis, not to exceed two (2) times per year under normal (non-emergency) conditions. Typical maintenance activities include vegetation management, scarifying, sediment removal, structural repair, and erosion repair. The Project will still convey storm flows and will not adversely affect the existing jurisdictional area functions. The proposed earthen basin will enhance storm water quality delivered to Lake Elsinore. A map depicting the storm drain system and jurisdictional areas is found in Attachment A of this Order.

V. Project Location

The Project is located southwesterly of the city of Lake Elsinore within a residential area of unincorporated Riverside County known as Lakeland Village. The storm drain alignment is generally located within existing streets. Specifically, the alignment is located within Maiden Lane, Landerville Avenue, Cottrell Boulevard, Anthony Avenue, Adelfa Street, Coleman Avenue, Zellar Street, and Gillette Street. The Project area is within the U.S. Geological Survey Lake Elsinore, California 7.5-minute topographic quadrangle (1997), within Sections 13 and 24 of Township 6 South, Range 5 West and within an un-sectioned portion of the La Laguna land grant of the San Bernardino Base and Meridian. A map showing the Project location is found in Attachment A of this Order.

Latitude	Longitude
33.636982° N	-117.355440° W
33.635314° N	-117.352859° W

VI. Project Impact and Receiving Waters Information

The Project is located within the jurisdiction of the Santa Ana Water Board. Receiving waters and groundwater potentially impacted by this Project are protected in accordance with the Water Quality Control Plan for the Santa Ana Basin (1995) and subsequent amendments (Basin Plan) and other plans and policies, which may be accessed online at http://www.waterboards.ca.gov/plans_policies/. The Basin Plan includes water quality standards, which consist of existing and potential beneficial uses of waters of the State, water quality objectives to protect those uses, and the State and federal antidegradation policies.

Receiving Water: Lake Elsinore

Existing or Potential Beneficial Uses: Water Contact Recreation (REC1), Non-contact Water Recreation (REC2), Warm Freshwater Habitat (WARM), Wildlife Habitat (WILD), Commercial and Sportfishing (COMM), and Rare, Threatened, or Endangered Species (RARE).

VII. Description of Direct Impacts to Waters of the State

Construction impacts include site preparation and grading, paving, and site cleanup. Subsequent periodic maintenance activities include vegetation management, scarifying, sediment removal, structural repair, and erosion repair. The Project will impact 0.022 acre and 250 linear feet of non-vegetated, ephemeral non-wetland Waters of the U.S. of which 0.004 acre is permanent impact due to structural improvements and 0.018 acre is temporary impact due to grading of the existing watercourse.

Total Project fill/excavation quantities for all impacts are summarized in Table 2. Permanent impacts are categorized as those resulting in a physical loss in area and also those degrading ecological condition only.

Table 2: Total Project Fill/Excavation Quantity									
Aquatic Resource Type	Temporary Impact[1]			Permanent Impact					
				Physical Loss of Area			Degradation of Ecological Condition Only		
	Acres	CY[2]	LF	Acres	CY	LF	Acres	CY	LF
Stream Channel	0.018	--	180	0.004	--	70	--	--	--

VIII. Description of Indirect Impacts to Waters of the State

The Santa Ana Water Board recognizes the potential for indirect impacts to waters of the State associated with the Project. Appropriate Best Management Practices (BMPs) will be employed to reduce indirect impacts to these waters.

IX. Avoidance and Minimization

The Permittee has proposed to prepare a Storm Water Pollution Prevention Plan (SWPPP) and implement BMPs to avoid and minimize temporary impacts. Additionally, construction activities are not expected to be performed during wet weather flows.

X. Compensatory Mitigation

The Project will not result in a loss of riverine functions, and compensatory mitigation is not required.

XI. California Environmental Quality Act (CEQA)

Pursuant to California Code of Regulations, Title 14, Chapter 3, section 15096, as a responsible agency, the Santa Ana Water Board is required to consider an Environmental Impact Report (EIR) or Initial Study/Negative Declaration (IS/ND) prepared by the lead agency to determine whether to certify a Project. A responsible agency has responsibility to mitigate and avoid only the direct and indirect environmental effect of those parts of the project that it decides to carry out, finance, or approve. Further, the responsible agency must make findings as required by section 15091 and, if necessary, section 15093 for each and every significant impact of the Project.

The Project is part of the Lakeland Village Master Drainage Plan (MDP) for which a Final Program EIR was certified by the Riverside County Flood Control and Water Conservation District Board of Supervisors on March 10, 2015. The Lakeland Village MDP included an analysis of the Project; however, since the time the Final Program EIR was certified, the alignment for the Project changed slightly and an approximate 1.5-acre sediment basin was added. Therefore, an Addendum to the Final PEIR was prepared to address the minor changes and additions to the MDP facilities analyzed in the certified Final Program EIR. The Notice of Determination for the Addendum was filed with the Riverside County Clerk on February 6, 2018.

As required by section 15096, in approving this Certification, the Santa Ana Water Board has considered the EIR and Addendum certified by the Board of Supervisors and subsequent

[1] Includes only temporary direct impacts to waters of the State and does not include upland areas of temporary disturbance, which could result in a discharge to waters of the State. Temporary impacts, by definition, are restored to pre-project conditions and, therefore, do not include a physical loss of area or degradation of ecological condition.

[2] Cubic Yards (CY); Linear Feet (LF)

information provided by the Permittee. More specifically, the Santa Ana Water Board considered those sections of the EIR pertaining to impacts to water quality standards. Based on the mitigation proposed in the EIR and the Conditions set forth in this Certification, potentially adverse impacts to water quality standards should be reduced to a less than significant level and beneficial uses protected, if all stated mitigation and conditions are performed. Thus, the Santa Ana Water Board independently finds that to avoid or mitigate impacts to water quality to a less than significant level, changes or alterations have been required in the Project.

XII. Petitions for Reconsideration

Any person aggrieved by this action may petition the State Water Resources Control Board to reconsider this Order in accordance with California Code of Regulations, title 23, section 3867. A petition for reconsideration must be submitted in writing and received within thirty (30) calendar days of the issuance of this Order.

XIII. Fees Received

An application fee of $1,500.00 was received on February 6, 2018. The fee amount was determined as required by California Code of Regulations, title 23, sections 3833(b)(3) and 2200(a)(3) and was calculated as category A - Fill & Excavation Discharges (fee code 84) with the dredge and fill fee calculator.

XIV. Conditions

The Santa Ana Water Board has independently reviewed the record of the Project to analyze impacts to water quality and designated beneficial uses within the watershed of the Project. In accordance with this Order, the Permittee may proceed with the Project under the following terms and conditions:

A. Authorization

Impacts to waters of the State shall not exceed quantities shown in Table 2.

B. Reporting and Notification Requirements

The following section details the reporting and notification types and timing of submittals. Requirements for the content of these reporting and notification types are detailed in Attachment B, including specifications for photo and map documentation during Project construction. Written reports and notifications shall be submitted using the *Reporting and Notification Cover Sheet* located in Attachment B and signed by the Permittee or an authorized representative.

1. **Project Reporting:**
   a. **Annual Reporting.** The Permittee shall submit an Annual Report each year on the anniversary of this Order. Annual reporting shall continue until a *Notice of Project Complete Letter* is issued to the Permittee.

2. **Project Status Notifications:**
   a. **Commencement of Construction.** The Permittee shall submit a *Commencement of Construction Report* at least seven (7) days prior to start of initial ground disturbance activities.

   b. **Request for Notice of Completion of Discharges Letter.** The Permittee shall submit a *Request for Notice of Completion of Discharges Letter* following

completion of active Project construction activities, including any required restoration and permittee-responsible mitigation. This request shall be submitted to the Santa Ana Water Board staff within thirty (30) days following completion of all Project construction activities. Upon acceptance of the request, Santa Ana Water Board staff will issue to the Permittee a *Notice of Completion of Discharges Letter*, which will end the active discharge period and associated annual fees.

c. **Request for Notice of Project Complete Letter.** The Permittee shall submit a *Request for Notice of Project Complete Letter* when construction and any required post-construction monitoring are complete[3] and when no further Project activities will occur. This request shall be submitted to Santa Ana Water Board staff within thirty (30) days following completion of all Project activities. Upon approval of the request, the Santa Ana Water Board staff will issue to the Permittee a *Notice of Project Complete Letter*, which will end the post discharge monitoring period and associated annual fees.

3. **Conditional Notifications and Reports:** The following notifications and reports are required as appropriate.

a. **Accidental Discharges of Hazardous Materials[4].** Following an accidental discharge of a reportable quantity of a hazardous material, sewage, or an unknown material, the following applies (Water Code section 13271):

i. As soon as (A) Permittee has knowledge of the discharge or noncompliance, (B) notification is possible, and (C) notification can be provided without substantially impeding cleanup or other emergency measures then the Permittee shall:

- first call – 911 (to notify local response agency)
- then call – Office of Emergency Services (OES) State Warning Center at: (800) 852-7550 or (916) 845-8911
- Lastly follow the required OES procedures as set forth in: http://www.caloes.ca.gov/FireRescueSite/Documents/CalOES-Spill_Booklet_Feb2014_FINAL_BW_Acc.pdf

ii. Following notification to OES, the Permittee shall notify Santa Ana Water Board, as soon as practicable (ideally within twenty-four [24] hours). Notification may be via telephone, e-mail, delivered written notice, or other verifiable means.

---

[3] Completion of post-construction monitoring will be determined by Santa Ana Water Board staff and will be contingent on successful attainment of restoration and mitigation performance criteria.

[4] "Hazardous material" means any material that, because of its quantity, concentration, or physical or chemical characteristics, poses a significant present or potential hazard to human health and safety or to the environment if released into the workplace or the environment. "Hazardous materials" include but are not limited to hazardous substances, hazardous waste, and any material that a handler or the administering agency has a reasonable basis for believing that it would be injurious to the health and safety of persons or harmful to the environment if released into the workplace or the environment. (Health and Safety Code section 25501.)

iii. Within five (5) working days of notification to the Santa Ana Water Board, the Permittee shall submit an *Accidental Discharge of Hazardous Material Report*.

b. **Violation of Compliance with Water Quality Standards.** The Permittee shall notify the Santa Ana Water Board of any event causing a violation of compliance with water quality standards. Notification may be via telephone, email, delivered written notice, or other verifiable means.

i. Examples of noncompliance events include: lack of storm water treatment following a rain event, discharges causing a visible plume in a water of the State, and water contact with uncured concrete.

ii. This notification shall be followed within three (3) working days by submission of a *Violation of Compliance with Water Quality Standards Report* to the Santa Ana Water Board.

c. **In-Water Work.**

i. The Permittee shall notify the Santa Ana Water Board at least forty-eight (48) hours prior to initiating maintenance work in water or stream diversions. Notification may be via telephone, email, delivered written notice, or other verifiable means.

ii. Within thirty (30) working days following completion of maintenance work in water or stream diversions, an *In-Water Work/Diversions Water Quality Monitoring Report* shall be submitted to Santa Ana Water Board staff.

d. **Modifications to Project.** Project modifications may require an amendment of this Order. The Permittee shall give advance notice to Santa Ana Water Board staff by submitting a *Modifications to Project Report*, if Project implementation as described in the application materials is altered in any way or by the imposition of subsequent permit conditions by any local, State, or federal regulatory. The Permittee shall inform Santa Ana Water Board staff of any Project modifications that will interfere with the Permittee's compliance with this Order. Notification may be made in accordance with conditions in the Certification Deviation section of this Order.

e. **Transfer of Property Ownership.** This Order is not transferable in its entirety or in part to any person or organization except after notice to the Santa Ana Water Board in accordance with the following terms:

i. The Permittee must notify the Santa Ana Water Board of any change in ownership or interest in ownership of the Project area by submitting a *Transfer of Property Ownership Report*. The Permittee and purchaser must sign and date the notification and provide such notification to the Santa Ana Water Board at least ten (10) days prior to the transfer of ownership. The purchaser must also submit a written request to the Santa Ana Water Board to be named as the permittee in a revised order.

ii. Until such time as this Order has been modified to name the purchaser as the permittee, the Permittee shall continue to be responsible for all requirements set forth in this Order.

C. **Water Quality Monitoring of Maintenance Activities**

1. **General:** If surface water is present during maintenance activities, continuous visual surface water monitoring shall be conducted to detect accidental discharge of construction related pollutants (e.g., oil and grease, turbidity plume, or uncured concrete).

2. **Accidental Discharges/Noncompliance:** Upon occurrence of an accidental discharge of hazardous materials or a violation of compliance with a water quality standard, Santa Ana Water Board staff may require water quality monitoring based on the discharge constituents and/or related water quality objectives and beneficial uses.

3. **In-Water Work:** During planned maintenance work in water, any discharge(s) to waters of the State shall conform to the following water quality standards:

   a. **Dissolved Oxygen.** The dissolved oxygen content of surface waters, as a result of controllable water quality factors, shall not be depressed below 5 mg/L for waters designated WARM.

   b. **Turbidity.** Where natural turbidity is between 0 and 50 Nephelometric Turbidity Units (NTU), increases shall not exceed 20 percent. Where natural turbidity is greater than 100 NTU, increases shall not exceed 10 percent. Should there be water in the maintenance area, measurements of turbidity shall be taken upstream and downstream of the maintenance activity.

   Sampling shall be conducted in accordance with Table 3 sampling parameters.[5]

Table 3: Sample Type and Frequency Requirements

Parameter	Unit of Measurement	Type of Sample	Minimum Frequency
Dissolved Oxygen	mg/L & % saturation	Grab	Once per day during in-water work.
Turbidity	NTU	Grab	Once per day during in-water work.

4. **Post-Construction:** The Permittee shall visually inspect the Project site during the rainy season for five (5) years to ensure excessive erosion, stream instability, or other water quality pollution is not occurring in or downstream of the Project site. If water quality pollution is occurring, the Permittee shall contact within three (3) working days

[5] Pollutants shall be analyzed using the analytical methods described in 40 Code of Federal Regulations Part 136; where no methods are specified for a given pollutant, the method shall be submitted to the Santa Ana Water Board staff for approval. Grab samples shall be taken between the surface and mid-depth and not be collected at the same time each day to get a complete representation of variations in the receiving water. A hand-held field meter may be used, provided the meter utilizes a U.S. EPA-approved algorithm/method and is calibrated and maintained in accordance with the manufacturer's instructions. A calibration and maintenance log for each meter used for monitoring shall be maintained onsite.

the Santa Ana Water Board staff member overseeing the Project. The Santa Ana Water Board may require the submission of a *Violation of Compliance with Water Quality Standards Report*. Additional permits may be required to carry out any necessary site remediation.

D. Standards

1. This Certification will remain valid until the USACE 2017 Nationwide Permits expire on March 18, 2022, or through an extended period beyond the expiration date that is authorized in writing by the USACE.

2. This Order is subject to modification or revocation upon administrative or judicial review, including review and amendment pursuant to Water Code section 13330 and California Code of Regulations, title 23, chapter 28, Article 6 commencing with sections 3867-3869, inclusive. Additionally, the Santa Ana Water Board reserves the right to suspend, cancel, or modify and reissue this Order, after providing notice to the Permittee, if the Santa Ana Water Board determines: that the Project fails to comply with any of the conditions of this Order; or, when necessary to implement any new or revised water quality standards and implementation plans adopted or approved pursuant to the Porter-Cologne Water Quality Control Act (Water Code sections13000 et seq.) or federal Clean Water Act section 303 (33 U.S.C. section 1313). For purposes of Clean Water Act section 401(d), the condition constitutes a limitation necessary to assure compliance with water quality standards and appropriate requirements of State law.

3. This Order is not intended and shall not be construed to apply to any activity involving a hydroelectric facility requiring a Federal Energy Regulatory Commission (FERC) license or an amendment to a FERC license, unless the pertinent certification application was filed pursuant to subsection 3855(b) of chapter 28, title 23 of the California Code of Regulations, and that application specifically identified that a FERC license or amendment to a FERC license for a hydroelectric facility was being sought.

4. This Order is conditioned upon total payment of any fee required under title 23 of the California Code of Regulations and owed by the Permittee.

5. In the event of any violation or threatened violation of the conditions of this Order, the violation or threatened violation shall be subject to any remedies, penalties, processes, or sanctions as provided for under State and federal law. For purposes of Clean Water Act section 401(d), the applicability of any State law authorizing remedies, penalties, processes, or sanctions for the violation or threatened violation constitutes a limitation necessary to assure compliance with the water quality standards and other pertinent requirements incorporated into this Order.

E. General Compliance

1. Failure to comply with any condition of this Order shall constitute a violation of the Porter-Cologne Water Quality Control Act and the Clean Water Act. The Permittee and/or discharger may then be subject to administrative and/or civil liability pursuant to Water Code section 13385.

2. If the conditions of this Order are changed, any of the criteria or conditions as previously described are not met, or new information becomes available that indicates a water quality problem, the Santa Ana Water Board may require that the Permittee submit a *Report of Waste Discharge* and obtain *Waste Discharge Requirements.*

3. Permitted actions must not cause a violation of any applicable water quality standards, including impairment of designated beneficial uses for receiving waters, as adopted in the Basin Plan and subsequent Basin Plan Amendments or in any applicable State Water Resources Control Board water quality control plan or policy. The source of any such discharge must be eliminated as soon as practicable.

4. In response to a suspected violation of any condition of this Order, the Santa Ana Water Board may require the holder of this Order to furnish, under penalty of perjury, any technical or monitoring reports the Santa Ana Water Board deems appropriate, provide that the burden, including costs, of the reports shall bear a reasonable relationship to the need for the reports and the benefits to be obtained from the reports. The additional monitoring requirements ensure that permitted discharges and activities comport with any applicable effluent limitations, water quality standards, and/or other appropriate requirement of State law.

5. The Permittee shall, at all times, fully comply with engineering plans, specifications, and technical reports submitted to support this Order; and all subsequent submittals required as part of this Order. The conditions within this Order and Attachments supersede conflicting provisions within Permittee submittals.

6. This Order and all of its conditions contained herein continue to have full force and effect regardless of the expiration or revocation of any federal license or permit issued for the Project. For purposes of Clean Water Act section 401(d), this condition constitutes a limitation necessary to assure compliance with the water quality standards and other pertinent requirements of State law.

7. **Construction General Permit Requirement:** The Permittee shall maintain compliance with conditions described in and required by NPDES General Permit for Storm Water Discharges Associated with Construction and Land Disturbance Activities (Order No. 2009-0009-DWQ; NPDES No. CAS000002) and any subsequent approvals.

F. Administrative

1. Signatory requirements for all document submittals required by this Order are presented in Attachment C of this Order.

2. This Order does not authorize any act that results in the taking of a threatened, endangered, or candidate species, or any act that is now prohibited or becomes prohibited in the future under either the California Endangered Species Act (Fish and Game Code, sections 2050-2097) or the federal Endangered Species Act (16 U.S.C. sections 1531-1544). If a "take" will result from any act authorized under this Order held by the Permittee, the Permittee shall obtain authorization for the take prior to any construction or operation of the portion of the Project that may result in a take. The Permittee is responsible for meeting all requirements of the applicable endangered species act for the Project authorized under this Order.

3. The Permittee shall grant Santa Ana Water Board staff or an authorized representative (including an authorized contractor acting as a Water Board representative), upon presentation of credentials and other documents as may be required by law, permission to:

   a. Enter upon the Project or compensatory mitigation site(s) premises where a regulated facility or activity is located or conducted, or where records are kept;

   b. Have access to and copy any records that are kept and are relevant to the Project or the requirements of this Order;

   c. Inspect any facilities, equipment (including monitoring and control equipment), practices, or operations regulated or required under this Order;

   d. Sample or monitor for the purposes of assuring Order compliance.

4. A copy of this Order shall be provided to any consultants, contractors, and subcontractors working on the Project. Copies of this Order shall remain at the Project site for the duration of this Order. The Permittee shall be responsible for work conducted by its consultants, contractors, and any subcontractors.

5. A copy of this Order shall be available at the Project site(s) during construction for review by site personnel and agencies. All personnel performing work on the Project shall be familiar with the content of this Order and its posted location at the Project site.

6. **Lake and Streambed Alteration Agreement:** The Permittee shall submit a signed copy of the California Department of Fish and Wildlife's (CDFW) lake and streambed alteration agreement, if applicable, to the Santa Ana Water Board immediately upon execution and prior to any discharge to waters of the State. If a Streambed Alteration Agreement will not be issued by CDFW, the Project may be able to proceed under Operation of Law.

G. Construction and Maintenance

1. Good Site Management "Housekeeping":

   a. A SWPPP shall be developed prior to Project construction and include measures to avoid and minimize the discharge of pollutants into the watercourse during construction.

   b. BMPs for effective perimeter control shall be in place at all times to control the discharge of pollutants from the Project site during construction and maintenance. Construction waste shall be contained and protected against wind and exposure to storm water at all times, unless being actively handled. Chemical, fuel, and lubricant containers shall be kept closed and protected from damage or upset at all times, unless being actively used. Dirt and landscaping material stockpiles shall have effective erosion control BMPs in place to prevent material transport in storm water or directly into the channel and shall not be located in any Waters of the U.S. Discharges of wastewater from the Project site are prohibited.

c. Substances resulting from Project-related activities and that could be harmful to aquatic life shall not be discharged to soils or water of the State. These substances include but are not limited to petroleum lubricants and fuels, cured and uncured cements, epoxies, paints and other protective coating materials, Portland cement concrete or asphalt concrete, and washings and cuttings thereof. All waste concrete shall be removed from the Project site.

d. Motorized equipment shall not be maintained or parked in or near any stream crossing, channel, or lake margin in such manner that petroleum products or other pollutants from the equipment might enter these areas under any flow conditions. Vehicles shall not be driven or equipment shall not be operated on-site in waters of the State, except as necessary to complete the proposed Project.

e. Prior to construction activities, the Permittee shall delineate the work area with brightly colored fencing or other methods to ensure temporary impacts to waters of the U.S. and State do not exceed the limits authorized in this Certification.

2. **Hazardous Materials:** The Permittee shall comply with local, State and federal laws and regulations regarding the handling and storage of hazardous substances.

3. **Invasive Species:** BMPs to stabilize disturbed soils shall include the use of native plant species whenever feasible.

4. **Storm Water:** The Project shall comply with the local regulations associated with the Santa Ana Water Board's Municipal Stormwater Permit issued to Riverside County and co-permittees under NPDES No. CAS618033 and Waste Discharge Requirements Order No. R8-2010-0033, and subsequent iterations thereof.

H. Certification Deviation

1. Minor modifications of Project locations or predicted impacts may be necessary as a result of unforeseen field conditions, necessary engineering re-design, construction concerns, or similar reasons. For purposes of this Certification, a *Certification Deviation* is a Project locational or impact modification that does not require an immediate amendment of the Order because the Santa Ana Water Board has determined that any potential water resource impacts that may result from the change are sufficiently addressed by the Order conditions and the CEQA Findings. After the termination of construction, this Order will be formally amended to reflect all authorized Certification Deviations and any resulting adjustments to the amount of water resource impacts and required compensatory mitigation amounts.

2. A Project modification shall not be granted a *Certification Deviation* if it warrants or necessitates changes that are not addressed by the Order conditions or the CEQA environmental document such that the Project impacts are not addressed in the Project's environmental document or the conditions of this Order. In this case, a supplemental environmental review and different Order will be required.

XV. Water Quality Certification

I hereby issue the Order (SARWQCB WDID # 33-2018-03) for the *Lakeland Village MDP Line H, Stage 1 Project*. This Order certifies that any discharge from the referenced Project will comply with the applicable provisions of Clean Water Act sections 301 (Effluent Limitations), 302 (Water Quality Related Effluent Limitations), 303 (Water Quality Standards and Implementation Plans), 306 (National Standards of Performance), and 307 (Toxic and Pretreatment Effluent Standards), as long as all of the conditions listed in the Order are met.

This discharge is also regulated pursuant to State Water Board Water Quality Order No. 2003-0017-DWQ, which authorizes this Order to serve as Waste Discharge Requirements pursuant to the Porter-Cologne Water Quality Control Act (Water Code section 13000 et seq.).

Except insofar as may be modified by any preceding conditions, all Order actions are contingent on: (a) the discharge being limited and all proposed mitigation being completed in strict compliance with the conditions of this Order and the attachments to this Order; and (b) compliance with all applicable requirements of Statewide Water Quality Control Plans and Policies and the Santa Ana Water Board's Basin Plan and Policies.

HOPE A. SMYTHE
Executive Officer
Santa Ana Water Quality Control Board

12/27/18
Date

Attachment A Project Map(s)
Attachment B Report and Notification Requirements
Attachment C Signatory Requirements

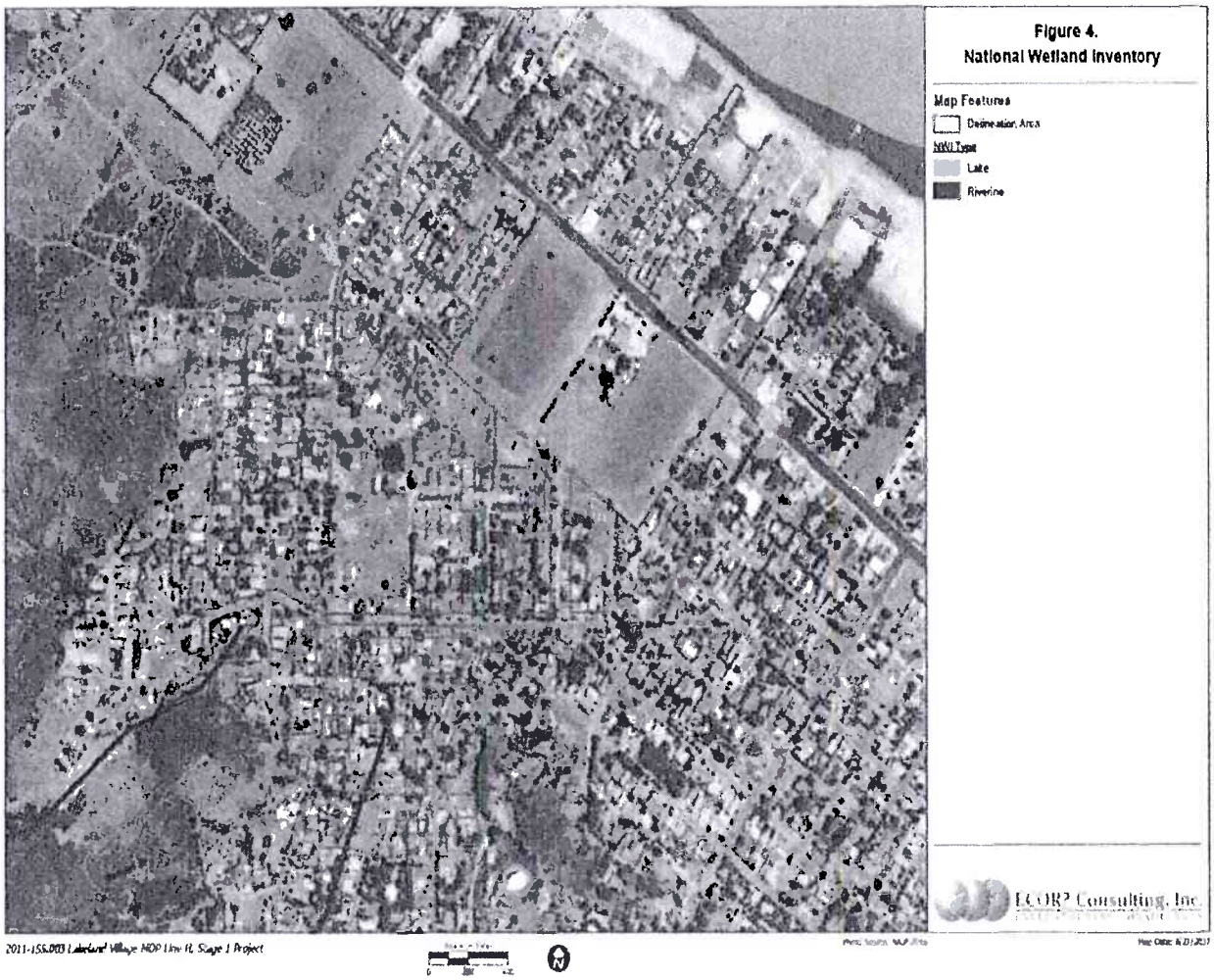

Lakeland Village MDP Line H, Stage 1 Project, Lakeland Village area southwest of the city of Lake Elsinore.

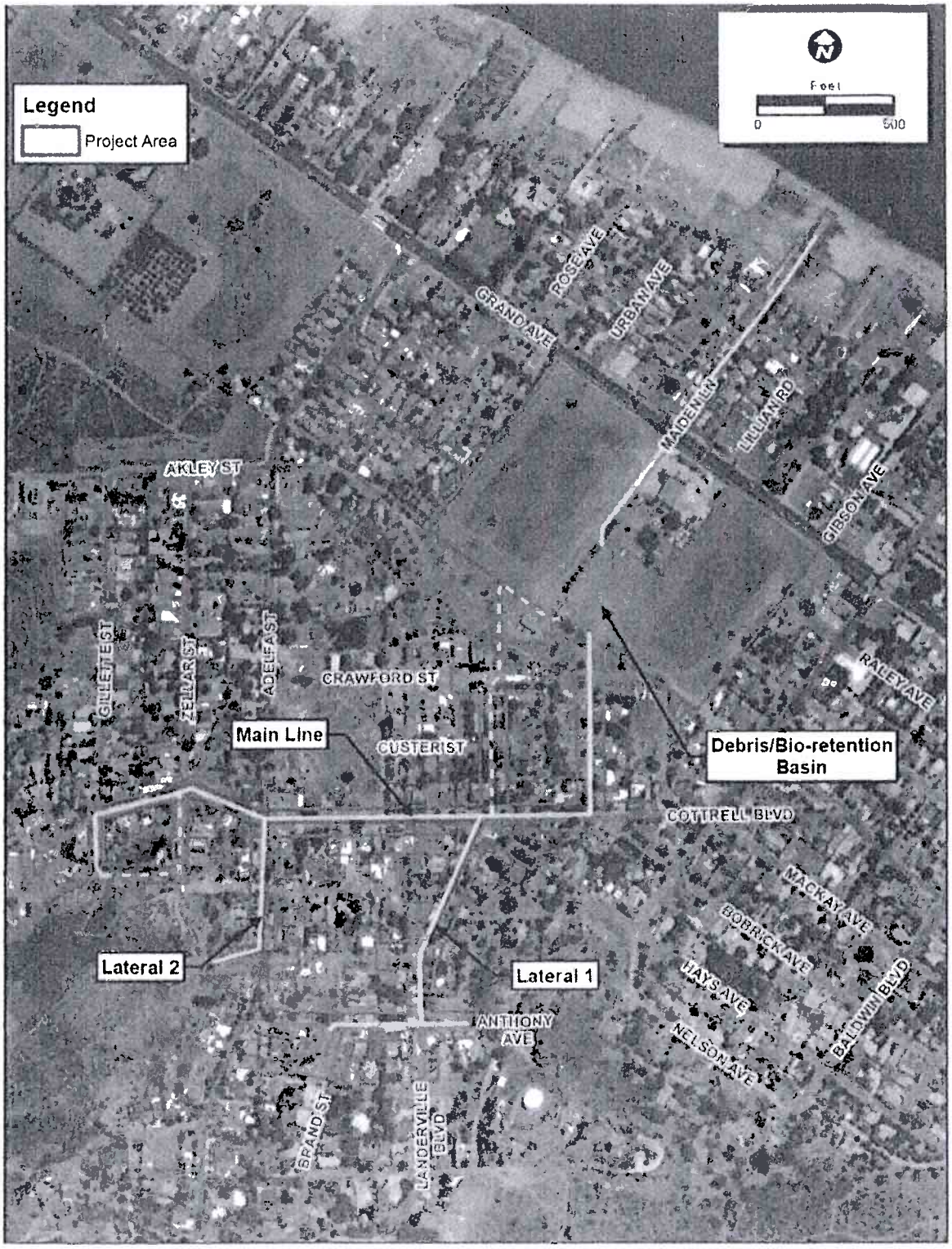
Legend
Project Area
Feet
0
500
ROSE AVE
GRAND AVE
URBAN AVE
MALDEN LN
LILLIAN RD
GIBSON AVE
AKLEY ST
GILLETTE ST
ZELLAR ST
ADELE AST
CRAWFORD ST
RALEY AVE
Main Line
CUSTER ST
Debris/Bio-retention Basin
COTTRELL BLVD
MACKAY AVE
BOBRICK AVE
HAYS AVE
NELSON AVE
BALDWIN BLVD
Lateral 2
Lateral 1
ANTHONY AVE
BRAND ST
LANDERVILLE BLVD

Copies of this Form

In order to identify your Project, include a copy of the Project-specific Cover Sheet below with your report. Please retain for your records. If you need to obtain a blank copy of the Cover Sheet, you may download it from https://www.waterboards.ca.gov/santaana/water_issues/programs/401_certification/ (go down to *Resources for Applicants* and select *Report and Notification Cover Sheet*).

Report Submittal Instructions

1. Check the box on the Report and Notification Cover Sheet next to the report or notification you are submitting.
   - **Part A (Annual Report):** This report shall be submitted annually from the anniversary of Project effective date until a *Notice of Project Complete Letter* is issued.
   - **Part B (Project Status Notifications):** Used to notify the Santa Ana Water Board of the status of the Project schedule that may affect Project billing.
   - **Part C (Conditional Notifications and Reports):** Required on a case-by-case basis for accidental discharges of hazardous materials, violation of compliance with water quality standards, notification of in-water work, or other reports.
2. Sign the *Report and Notification Cover Sheet* and attach all information requested for the Report Type.
3. **Electronic Report Submittal Instructions:**
   - Submit signed *Report and Notification Cover Sheet* and required information via email to: Marc.Brown@waterboards.ca.gov or other Santa Ana Water Board Certification staff.
   - Include in the subject line of the email:
     Subject: ATTN: Lakeland Village MDP Line H, Stage 1; WDID # 332018-03; Reg. Measure ID: 419463 Report.

Definition of Reporting Terms

1. Active Discharge Period: The active discharge period begins with the effective date of this Order and ends on the date that the Permittee receives a *Notice of Completion of Discharges Letter* or, if no post-construction monitoring is required, a *Notice of Project Complete Letter*. The Active Discharge Period includes all elements of the Project, including site construction and restoration, and any Permittee responsible compensatory mitigation construction.
2. Request for Notice of Completion of Discharges Letter: This request by the Permittee to the Santa Ana Water Board staff pertains to projects that have post construction monitoring requirements, e.g., if site restoration were required to be monitored for five (5) years following construction. Santa Ana Water Board staff will review the request and send a *Completion of Discharges Letter* to the Permittee upon approval. This letter will initiate the post-discharge monitoring period and a change in fees from the annual active discharge fee to the annual post-discharge monitoring fee.
3. Request for Notice of Project Complete Letter: This request by the Permittee to the Santa Ana Water Board staff pertains to projects that either have completed post-construction monitoring and achieved performance standards, or have no post-construction monitoring requirements and no further

Project activities are planned. Santa Ana Water Board staff will review the request and send a *Project Complete Letter* to the Permittee upon approval. Termination of annual invoicing of fees will correspond with the date of this letter.

4. **Post-Discharge Monitoring Period:** The post-discharge monitoring period begins on the date of the *Notice of Completion of Discharges Letter* and ends on the date of the *Notice of Project Complete Letter* issued by the Santa Ana Water Board staff. The Post-Discharge Monitoring Period includes continued water quality monitoring or compensatory mitigation monitoring.

5. **Effective Date:** Date of Order issuance.

Map/Photo Documentation Information

When submitting maps or photos, please use the following formats.

1. **Map Format Information:**
   Preferred map formats of at least 1:24000 (1" = 2000') detail (listed in order of preference):
   - **GIS shapefiles**: The shapefiles shall depict the boundaries of all Project areas and extent of aquatic resources impacted. Each shape should be attributed with the extent/type of aquatic resources impacted. Features and boundaries should be accurate to within 33 feet (10 meters). Identify datum/projection used and, if possible, provide map with a North American Datum of 1983 (NAD83) in the California Teale Albers projection in feet.
   - **Google KML files** saved from Google Maps: My Maps or Google Earth Pro. Maps shall show the boundaries of all Project areas and extent/type of aquatic resources impacted. Include URL(s) of maps. If this format is used, include a spreadsheet with the object ID and attributed with the extent/type of aquatic resources impacted.
   - **Other electronic format** (CAD or illustration format) that provides a context for location (inclusion of landmarks, known structures, geographic coordinates, or USGS DRG or DOQQ). Maps shall show the boundaries of all Project areas and extent/type of aquatic resources impacted. If this format is used, include a spreadsheet with the object ID and attributed with the extent/type of aquatic resources impacted.
   - Aquatic resource maps marked on paper **USGS 7.5-minute topographic maps** or **Digital Orthophoto Quarter Quads (DOQQ)** printouts. Maps shall show the boundaries of all Project areas and extent/type of aquatic resources impacted. If this format is used, include a spreadsheet with the object ID and attributed with the extent/type of aquatic resources impacted.

2. **Photo-Documentation:** Include a unique identifier, date stamp, written description of photo details, and latitude/longitude (in decimal degrees) or map indicating location of photo. Successive photos should be taken from the same vantage point to compare pre/post construction conditions.

REPORT AND NOTIFICATION COVER SHEET

Project:	Lakeland Village MDP Line H, Stage 1		
Permittee:	Riverside County Flood Control and Water Conservation District		
SARWQCB WDID:	332018-03		
Reg. Meas. ID:	419463	**Place ID:**	844742
Order Effective Date:	December 27, 2018		

Report Type Submitted

Part A – Project Reporting	
Report Type 1	☐ **Annual Report**
Part B - Project Status Notifications	
Report Type 2	☐ **Commencement of Construction**
Report Type 3	☐ **Request for Notice of Completion of Discharges Letter**
Report Type 4	☐ **Request for Notice of Project Complete Letter**
Part C - Conditional Notifications and Reports	
Report Type 5	☐ **Accidental Discharge of Hazardous Material Report**
Report Type 6	☐ **Violation of Compliance with Water Quality Standards Report**
Report Type 7	☐ **In-Water Work and Diversions Water Quality Monitoring Report**
Report Type 8	☐ **Modifications to Project Report**
Report Type 9	☐ **Transfer of Property Ownership Report**
Report Type 10	☐ **Transfer of Long-Term BMP Maintenance Report**

"I certify under penalty of law that I have personally examined and am familiar with the information submitted in this document and all attachments and that, based on my inquiry of those individuals immediately responsible for obtaining the information, I believe that the information is true, accurate, and complete. I am aware that there are significant penalties for submitting false information, including the possibility of fine and imprisonment."

Print Name [1]	**Affiliation and Job Title**
Signature	**Date**

[1]STATEMENT OF AUTHORIZATION (include if authorization has changed since application was submitted)

I hereby authorize _____ to act in my behalf as my representative in the submittal of this report, and to furnish upon request supplemental information in support of this submittal.

_____ Permittee's Signature

_____ Date

*This Report and Notification Cover Sheet must be signed by the Permittee or a duly authorized representative and included with all written submittals.

Part A – Project Reporting

Report Type 1	**Annual Report**
Report Purpose	Notify the Santa Ana Water Board staff of Project status during both the active discharge and post-discharge monitoring periods.
When to Submit	Annual reports shall be submitted each year by effective date. Annual reports shall continue until a *Notice of Project Complete Letter* is issued to the Permittee.
Report Contents	The contents of the annual report shall include the topics indicated below for each Project period. Report contents are outlined in Annual Report Topics below. **<u>During the Active Discharge Period</u>** • **Topic 1: Construction Summary** • **Topic 2: Mitigation for Temporary Impacts Status** • **Topic 3: Compensatory Mitigation for Permanent Impacts Status** **<u>During the Post-Discharge Monitoring Period</u>** • **Topic 2: Mitigation for Temporary Impacts Status** • **Topic 3: Compensatory Mitigation for Permanent Impacts Status**
Annual Report Topics (1-3)	
Annual Report Topic 1	**Construction Summary**
When to Submit	With the annual report during the Active Discharge Period.
Report Contents	**1.** Project progress and schedule, including initial ground disturbance, site clearing and grubbing, road construction, site construction, and the implementation status of construction storm water best management practices (BMPs). If construction has not started, provide estimated start date and reasons for delay. **2.** Map showing general Project progress. **3.** If applicable: **a.** Summary of Conditional Notification and Report Types 6 and 7 (Part C below). **b.** Summary of Certification Deviations. See Certification Deviation Attachment for further information.
Annual Report Topic 2	**Mitigation for Temporary Impacts Status**
When to Submit	With the annual report during both the Active Discharge Period and Post-Discharge Monitoring Period.
Report Contents	**1.** Planned date of initiation and map showing locations of mitigation for temporary impacts to waters of the State and all upland areas of temporary disturbance which could result in a discharge to waters of the

	State 2. If mitigation for temporary impacts has already commenced, provide a map and information concerning attainment of performance standards contained in the restoration plan.
Annual Report Topic 3	**Compensatory Mitigation for Permanent Impacts Status**
When to Submit	With the annual report during both the Active Discharge Period and Post-Discharge Monitoring Period.
Report Contents	***If not applicable report N/A.** **Part A. Permittee Responsible** **1.** Planned date of initiation of compensatory mitigation site installation. **2.** If installation is in progress, a map of what has been completed to date. **3.** If the compensatory mitigation site has been installed, provide a final map and information concerning attainment of performance standards contained in the compensatory mitigation plan. **Part B. Mitigation Bank or In-Lieu Fee (ILF)** 1. Status or proof of purchase of credit types and quantities. 2. Include the name of bank/ILF Program and contact information. 3. If ILF, location of project and type if known.

Part B – Project Status Notifications

Report Type 2	**Commencement of Construction**
Report Purpose	Notify Santa Ana Water Board staff prior to the start of construction.
When to Submit	Must be received at least seven (7) days prior to start of initial ground disturbance activities.
Report Contents	**1.** Date of commencement of construction. **2.** Anticipated date when discharges to waters of the State will occur. **3.** Project schedule milestones, including a schedule for onsite compensatory mitigation, if applicable.

Report Type 3	**Request for Notice of Completion of Discharges Letter**
Report Purpose	Notify Santa Ana Water Board staff that post-construction monitoring is required and that active Project construction, including any mitigation and permittee responsible compensatory mitigation, is complete.
When to Submit	Must be received by Santa Ana Water Board staff within thirty (30) days following completion of all Project construction activities.
Report Contents	**1.** Status of storm water *Notice of Termination(s)*, if applicable. **2.** Status of post-construction storm water BMP installation. **3.** Pre- and post-photo documentation of all Project activity sites where the discharge of dredge and/or fill/excavation was authorized. **4.** Summary of Certification Deviation discharge quantities compared to initial authorized impacts to waters of the State, if applicable. **5.** An updated monitoring schedule for mitigation for temporary impacts to waters of the State and Permittee responsible compensatory mitigation during the post-discharge monitoring period, if applicable.

Report Type 4	**Request for Notice of Project Complete Letter**
Report Purpose	Notify Santa Ana Water Board staff that construction and/or any post-construction monitoring is complete, or is not required, and no further Project activity is planned.
When to Submit	Must be received by Santa Ana Water Board staff within thirty (30) days following completion of all Project activities.
Report Contents	**Part A: Mitigation for Temporary Impacts** **1.** A report establishing that the performance standards outlined in the restoration plan have been met for Project site upland areas of temporary disturbance that could result in a discharge to waters of the State. **2.** A report establishing that the performance standards outlined in the restoration plan have been met for restored areas of temporary impacts to waters of the State. Pre- and post-photo documentation of all restoration sites.

	Part B: Permittee Responsible Compensatory Mitigation **1.** A report establishing that the performance standards outlined in the compensatory mitigation plan have been met. **2.** Status on the implementation of the long-term maintenance and management plan and funding of endowment. **3.** Pre- and post-photo documentation of all compensatory mitigation sites. **4.** Final maps of all compensatory mitigation areas (including buffers). **Part C: Post-Construction Storm Water BMPs** **1.** Date of storm water *Notice of Termination(s)*, if applicable. **2.** Report status and functionality of all post-construction BMPs.

Part C – Conditional Notifications and Reports

Report Type 5	**Accidental Discharge of Hazardous Material Report**
Report Purpose	Notifies Santa Ana Water Board staff that an accidental discharge of hazardous material has occurred.
When to Submit	Within five (5) working days following the date of an accidental discharge. Continue reporting as required by Santa Ana Water Board staff.
Report Contents	**1.** The report shall include the *OES Incident/Assessment Form*, a full description and map of the accidental discharge incident (i.e., location, time and date, source, discharge constituent and quantity, aerial extent, and photo documentation). If applicable, the *OES Written Follow-Up Report* may be substituted. **2.** If applicable, any required sampling data, a full description of the sampling methods, including frequency/dates and times of sampling, equipment, locations of sampling sites. **3.** Locations and construction specifications of any barriers, including silt curtains or diverting structures and any associated trenching or anchoring.

Report Type 6	**Violation of Compliance with Water Quality Standards Report**
Report Purpose	Notifies Santa Ana Water Board staff that a violation of compliance with water quality standards has occurred.
When to Submit	The Permittee shall report any event that causes a violation of water quality standards within three (3) working days of the noncompliance event notification to Santa Ana Water Board staff.
Report Contents	The report shall include: the cause; the location shown on a map; and the period of the noncompliance, including exact dates and times. If the noncompliance has not been corrected, include: the anticipated time it is expected to continue; the steps taken or planned to reduce, eliminate, and prevent reoccurrence of the noncompliance; and any monitoring results, if required by Santa Ana Water Board staff.

Report Type 7	**In-Water Work and Diversions Water Quality Monitoring Report**
Report Purpose	Notifies Santa Ana Water Board staff of the completion of in-water work.
When to Submit	Within three (3) working days following the completion of in-water work. Continue reporting in accordance with the approved water quality monitoring plan.
Report Contents	As required by the approved water quality monitoring plan.

Report Type 8	**Modifications to Project Report**
Report Purpose	Notifies Santa Ana Water Board staff if the Project, as described in the application materials, is altered in any way or by the imposition of subsequent permit conditions by any local, State, or federal regulatory authority.
When to Submit	If Project implementation as described in the application materials is altered in any way or by the imposition of subsequent permit conditions by any local, State, or federal regulatory authority.
Report Contents	A description and location of any alterations to Project implementation. Identification of any Project modifications that will interfere with the Permittee's compliance with the Order.

Report Type 9	**Transfer of Property Ownership Report**
Report Purpose	Notifies Santa Ana Water Board staff of change in ownership of the Project or Permittee-responsible mitigation area.
When to Submit	At least ten (10) working days prior to the transfer of ownership.
Report Contents	**1.** A statement that the Permittee has provided the purchaser with a copy of this Order and that the purchaser understands and accepts: **a.** the Order's requirements and the obligation to implement them or be subject to administrative and/or civil liability for failure to do so; and **b.** responsibility for compliance with any long-term BMP[1] maintenance plan requirements in this Order. **2.** A statement that the Permittee has informed the purchaser to submit a written request to the Santa Ana Water Board to be named as the permittee in a revised order.

Report Type 10	**Transfer of Long-Term BMP Maintenance Report**
Report Purpose	Notifies Santa Ana Water Board staff of transfer of long-term BMP maintenance responsibility.
When to Submit	At least ten (10) working days prior to the transfer of BMP maintenance responsibility.
Report Contents	A copy of the legal document transferring maintenance responsibility of post-construction BMPs.

[1] Best Management Practices (BMPs) is a term used to describe a type of environmental or water pollution control.

SIGNATORY REQUIREMENTS

All Documents Submitted In Compliance With This Order Shall Meet The Following Signatory Requirements:

1. All applications, reports, or information submitted to the Santa Ana Regional Water Quality Control Board (Santa Ana Water Board) shall be signed and certified as follows:

   a) For a corporation, by a responsible corporate officer of at least the level of vice-president.
   b) For a partnership or sole proprietorship, by a general partner or proprietor, respectively.
   c) For a municipality, or a State, federal, or other public agency, by either a principal executive officer or ranking elected official.

2. A duly authorized representative of a person designated in items 1.a through 1.c above may sign documents if:

   a) The authorization is made in writing by a person described in items 1.a through 1.c above.
   b) The authorization specifies either an individual or position having responsibility for the overall operation of the regulated activity.
   c) The written authorization is submitted to the Santa Ana Water Board staff contact prior to submitting any documents listed in item 1 above.

3. Any person signing a document under this section shall make the following certification:

   "I certify under penalty of law that I have personally examined and am familiar with the information submitted in this document and all attachments and that, based on my inquiry of those individuals immediately responsible for obtaining the information, I believe that the information is true, accurate, and complete. I am aware that there are significant penalties for submitting false information, including the possibility of fine and imprisonment."

APPENDIX "H"

ELSINORE VALLEY
MUNICIPAL WATER DISTRICT
(EVMWD)

STANDARD SPECIFICATIONS

SECTION 02223 – TRENCHING, BACKFILLING, AND COMPACTING

PART 1 - GENERAL

1.1 DESCRIPTION

This section includes materials, installation, and testing of trench excavation, backfilling, and compacting.

1.2 REFERENCE STANDARDS

The publications listed below form part of this specification to the extent referenced and are referred to in the text by the basic designation only. Reference shall be made to the latest edition of said standards unless otherwise called for.

ASTM D1556 - Standard Test Method for Density and Unit Weight of Soil in Place by the Stand-Cone Method
ASTM D2922 - Standard Test Methods for Density of Soil and Soil-Aggregate in Place by Nuclear Methods (Shallow Depth)
ASTM D3017 - Standard Test Method for Water Content of Soil and Rock in Place by Nuclear Methods (Shallow Depth)
ASTM D1557 - Test Method for Laboratory Compaction Characteristics of Soil Using Modified Effort (56,000 ft-lbf/ft^3(2,700 kN-m/m^3)
ASTM D4253 - Standard Test Methods for Maximum Index Density and Unit Weight of Soils Using a Vibratory Table
ASTM D4254 - Standard Test Methods of Minimum Index Density and Unit Weight of Soils and Calculation of Relative Density
ASTM D75 - Standard Practice for Sampling Aggregates
ASTM C90 - Standard Specification for Load bearing Concrete Masonry Units
ASTM A82 - Standard Specification for Steel Wire, Plain, for Concrete Reinforcement

1.3 RELATED WORK SPECIFIED ELSEWHERE

A. EVMWD Standard Drawings.

B. EVMWD Standard Specifications and Drawings Volume I, paragraph F, Section 1.09 of the General Conditions.

1.4 EARTHWORK AND REPAIRS IN CITY, COUNTY, AND STATE RIGHTS OF WAY

Conform to the requirements and provisions of the permits issued by those agencies in addition to the requirements of these Standard Specifications. If a permit is not required, earthwork and repairs shall conform to the standards of the agency in whose right of way the work is done in addition to the requirements of these Standard Specifications. Repairs may include street pavement, curb, gutters, swales, sidewalks or other improvements.

1.5 SAFETY PRECAUTIONS

Observe safety precautions in all phases of the work. Included shall be trench shoring, bracing, lighting, and barricades as dictated by reason and by the Safety Orders of the

Division of Industrial Safety, State of California (CAL OSHA). Acquire an exemption letter or trenching permit from the California Division of Industrial Safety (CAL OSHA) and comply with Labor Code Section 6705, Excavation Plans For Worker Protection. Submit a copy of the exemption letter or trenching permit with excavation plans to the District prior to excavation work.

1.6 OBSTRUCTIONS

The Contractor's attention is directed to the possible existence of pipe and other underground improvements which may or may not be shown on the Plans. The Contractor shall preserve and protect any such improvements whether shown on the Plans or not and expose such improvements in advance of the pipeline construction to allow for changes in the alignment as necessary. Where it is necessary to remove and replace or to relocate such improvements in order to prosecute the work, they shall be removed, maintained, and, permanently replaced by the Contractor at his expense. Existing underground utilities shall be protected in place.

1.7 SUBMITTALS

A. Submit shop drawings in accordance with Specification Section 01300B. Submit are part from a testing laboratory verifying that imported material is asbestos-free and conforms to the specified gradations or characteristics.

1.8 TESTING FOR COMPACTION

The District or the agency having jurisdiction over the area of the work will require the Contractor to test for compaction as described below:

A. Determine the density of soil in place by the sand cone method, ASTM D 1556 or by nuclear methods, ASTM D 2922 and D 3017.

B. Determine laboratory moisture-density relations of soils by ASTM D 1557.

C. Determine the relative density of cohesion less soils by ASTM D 4253 and D 4254.

D. Sample backfill materials by ASTM D 75.

E. "Relative compaction" is the ratio, expressed as a percentage, of the in place dry density to the laboratory maximum dry density.

F. Make excavation for compaction tests at the locations and to the depths designated by the District's Representative. Backfill and re-compact the excavations at completion of testing. When tests indicate that the compaction is less than the specified relative compaction, rework and retest those areas until the specified relative compaction has been obtained.

1.9 PIPE BEDDING

The pipe bedding shall be defined as a layer of material immediately below the bottom of the pipe and extending over the full trench width in which the pipe is bedded. Thickness of pipe base shall be a minimum of 6 inches.

1.10 PIPE ZONE

The pipe zone shall include the full width of trench from the bottom of the pipe to a horizontal level 12 inches above the top of the pipe. Where multiple pipes are placed in the same trench, the pipe zone shall extend from the bottom of the lowest pipe to a horizontal level above the top of the highest or topmost pipe. Thickness of pipe zone above the highest top of pipe shall be a minimum of 12 inches.

1.11 TRENCH ZONE

The trench zone includes the portion of the trench from the top of the pipe zone to the bottom of the pavement zone or to the existing surface in unpaved areas.

1.12 UPPER ZONE

The upper zone includes the asphalt concrete and aggregate base pavement section placed over the trench backfill.

1.13 WATER FOR CONSTRUCTION

Water supplied by the District, for whatever needs and uses, shall be paid for in accordance with the rates and rules of the District. The only exception is by written agreement with the District.

If District water is not available, the Contractor shall be responsible for supplying the construction water.

PART 2 - MATERIALS

2.1 NATIVE EARTH BACKFILL - TRENCH ZONE

Native earth backfill used above the pipe zone shall be excavated fine grained materials or loose soil free of asbestos, organic matter, roots, debris, rocks larger than 3 inches in diameter, clods, clay balls, broken pavement, and other deleterious materials. Sand Equivalent for said material shall be 20 or better. Backfill material shall be so graded that at least 40% of the material passes a No. 4 sieve. The coarser materials shall be well distributed throughout the finer material. Backfill materials that are obtained from trench excavated materials to the extent such material is available, shall be either screened directly into the trench or screened during the trenching operation. If screened during trenching, the material shall be maintained free of unscreened material during the handling and backfilling process. Hand selecting of rocks from earth as it is placed into the trench will not be permitted in lieu of the specified screening. Native earth backfill shall not be allowed or used in the pipe base or pipe zone areas unless it meets the gradation requirements of paragraph 2.03 and is approved by EVMWD.

2.2 IMPORTED MATERIAL FOR BACKFILL - TRENCH ZONE

Imported material shall conform to that specified for native earth backfill or imported sand.

2.3 IMPORTED SAND - PIPE BEDDING AND PIPEZONE

Imported sand used in the pipe base and pipe zone shall consist of natural or manufactured granular material, or a combination thereof, free of deleterious amounts of organic material, mica, loam, clay, and other substances. Under no circumstances will decomposed granite be allowed or used in the pipe base or pipe zone areas. Imported sand shall have the following gradation or similar:

Sieve Size	Percent Passing By Weight
3/8-inch	100
No.4	95 - 100
No.30	30 - 50
No.100	2 - 10
No.200	0 - 5

Imported sand shall have a sand equivalent (S.E.) of 30 or greater.

Native earth backfill shall not be allowed or used in the pipe base or pipe zone areas unless it meets the gradation requirements above and has a S.E. of 30 or greater.

2.4 ROCK REFILL FOR FOUNDATION STABILIZATION

Rock refill shall be crushed or natural rock having the following gradation:

Sieve Size	Percent Passing By Weight
3-inchs	100
1-1/2-inch	70 - 100
3/4-inch	60 - 100
No.4	25 - 55
No.30	10 - 30
No.200	0 - 15

2.5 GRANULAR MATERIAL FORBACKFILL

A. Where crushed aggregate base is called for in these specifications or in the Standard Drawings, the granular material for backfill shall be free of asbestos, organic materials, clay balls, and shall have the following gradation:

Sieve Size	Percent Passing By Weight
1-inch	100
3/4-inch	90 - 100
1/2-inch	40 - 70
3/8-inch	20 - 50
No.4	0 - 10
No.8	0 - 5

B. Whenever the phrase "crush aggregate base backfill material" is used in these Standard Specifications, it shall mean granular material for backfill as described above in 2.05.A and shall be referenced as No. 67.

C. Excavated material may be used for backfill provided it conforms to the Standard Specifications for structural backfill material.

2.6 CONCRETE FOR BELOW GROUND INSTALLATIONS

A. Concrete for anchors, collars, encasements, supports, and thrust blocks shall be Class A for reinforced items and Class C for un-reinforced items per Standard Specification Section 03300, except use rapid set concrete mix where indicated. Concrete slurry backfill, when required, shall be in accordance with Table 201-1.1.2 (A), 100-E-100 of the Standard Specifications for Public Works Construction (Green Book), latest edition.

B. Provide anchor blocks at valves at all pipeline connections and in pipe having rubber gasket bell and spigot or unrestrained mechanical joints at EVMWD's discretion.

C. Provide support blocks at all valves, depending on Geotechnical investigation results. Typical support of valves shall be accomplished by compacted Class 2 aggregate base, unless geotechnical conditions dictate otherwise.

D. Provide thrust blocks at fittings in pipe having rubber gasket bell and spigot or unrestrained mechanical joints.

E. Items B, C, and D shall be in accordance with the Standard Drawings.

2.7 TRENCH CUT -OFF WALLS

A. Provide ASTM C 90, Grade N-1, hollow load-bearing concrete masonry units, medium weight, moisture controlled, average compressive strength over gross area of 1,000 psi. Nominal face dimensions: 8 inches by 8 inches by 16 inches.

B. Provide ladder steel conforming to ASTM A 82.

C. Mortar and grout shall be a mixture of cement, sand, and water. Mortar shall consist of not more than one part cement to two and one-half parts sand by damp loose volume. The quantity of mixing water shall be not more than necessary for handling and placing.

2.8 WATER FOR COMPACTION

Water used in compaction shall have a maximum chloride concentration of 500 mg/l, a maximum sulfate concentration of 500 mg/l, and shall have a pH of7.0 to 9.0. Water shall be free of acid, alkali, or organic materials injurious to the pipe or coatings. Salt water will not be allowed.

PART 3 - EXECUTION

3.1 GENERAL

The Contractor shall perform all site grading, soil sterilant application, structure excavation and backfill, trench excavation and backfill for pipelines and conduits, and other earthwork required to complete the work under this contract. Included are all necessary clearing, grubbing, grading, and excavation of all classes and of whatever substance encountered, stockpiling, backfilling, compaction, controlling water, bracing excavations, stabilizing subgrade, protecting existing structures and facilities, complying with conditions of permits and safety regulations, cleaning up debris, papers and loose rocks, restoring fences and other disturbed property, maintaining trees which are not permitted to be removed, and disposing of excess material, and such supplementary operations as are necessary to properly complete the entire work indicated or specified.

3.2 TRENCHING SUBJECT TO PERMIT CONDITIONS

Trenching within public rights-of-way controlled by a state, county or city, or trenching within railroad rights-of-way shall be in accordance with requirements and provisions of the permits issued by those agencies for the construction within their respective rights-of-way. Such permit requirements and provisions which are more restrictive than those specified herein, shall take precedence and supersede the provisions of these Specifications.

3.3 PROTECTION OF WORKMEN

Excavations shall be so braced or sheeted so as to provide conditions under which workmen may work safely and efficiently at all times. The latest revision of the rules, orders

and regulations of the Division of Industrial Safety of the State of California shall be complied with.

3.4 PUBLIC SAFETY

Barriers shall be placed at each end of all excavations and such places as may be necessary along excavations to warn all pedestrian and vehicular traffic of such excavations. Lights shall also be placed along excavations from sunset each day to sunrise of the next day until such excavation is entirely refilled. Material for backfill or for protection of excavation in public roads from surface drainage shall be neatly placed and kept shaped so as to cause the least possible interference with public travel. Free access must be provided to all fire hydrants, water valves, meters, and private drives, or other property or facilities that may have routine use.

3.5 SUPPORT OF ADJACENT PROPERTY

Excavations shall be so braced, sheeted, and supported that the ground alongside the excavation will not slide or settle, and all existing improvements of any kind, either on public or private property, will be fully protected from damage. Damage to adjacent property or to the work occurring through settlements, water or earth pressures, slides, caves or other causes due to failure of lack of sheeting or bracing or improper bracing, or through negligence or fault of the Contractor in any other manner, shall be repaired by the Contractor at his own expense.

3.6 EXISTING IMPROVEMENTS

The Contractor's attention is directed to the possible existence of pipe and other underground improvements which may or may not be shown on the plans. The Contractor shall preserve and protect any such improvements whether shown on the plans or not. Where it is necessary to remove and replace or to relocate such improvements in order to prosecute the work, they shall be removed, maintained, and permanently replaced by the Contractor at his expense, except as otherwise provided in the General Provisions.

3.7 DRAINAGE CONTROL

A. Control of Surface Drainage
The Contractor shall control grading in a manner to prevent water running into excavations. Obstruction of surface drainage shall be avoided and means shall be provided whereby storm and wastewater can flow uninterrupted in existing gutters, other surface drains or temporary drains.

B. Preservation of Existing Drainage
Except as shown on the Plans, existing drainage patterns shall be preserved. Where construction methods cause a temporary obstruction of drainage patterns temporary facilities adequate for expected flows and a means of emergency removal of the obstruction shall be provided.

3.8 COMPACTION REQUIREMENTS

Unless otherwise shown on the Plans or otherwise described in the Specifications and required by the agency having jurisdiction over the area of the work, relative compaction in pipe trenches shall be a minimum as follows:

A. Pipe bedding - 90% relative compaction.
B. Pipe zone - 90% relative compaction.
C. Trench zone - 95% relative compaction.
D. Upper zone - 95% relative compaction.

3.9 SHEETING, SHORING, AND BRACING OF TRENCHES

Trenches shall have sheeting, shoring, and bracing conforming with 29CFR 1926, Subpart P-Excavations, CAL/OSHA requirements, and the District's requirements.

3.10 SIDEWALK, PAVEMENT, AND CURB REMOVAL

Cut and remove bituminous and concrete pavements regardless of the thickness, and curbs and sidewalks prior to excavation of the trenches with a pavement saw, hydro hammer, or pneumatic pavement cutter. Width of the pavement cut shall be at least equal to the required width of the trench at ground surface. Haul pavement and concrete materials from the site. Do not use for trench backfill.

3.11 BLASTING

Blasting is not permitted for the project.

3.12 DEWATERING

Provide and maintain means and devices to remove and dispose of all water entering the trench excavation during the time the trench is being prepared for the pipelaying, during the laying of the pipe, until cement mortar of exterior joints has set hard, when concrete is being deposited and during the hydration process, and until the backfill at the pipe zone and trench zone has been completed. These provisions shall apply during the noon hour as well as overnight. Dispose of the water in a manner to prevent damage to adjacent property and in accordance with regulatory agency requirements. If feasible, dewatering flows shall be discharged to storm drain facilities in accordance with Riverside County Flood Control and Water Conservation District requirements. Contractor shall be responsible for obtaining a permit and performing monitoring and reporting to Regional Water Quality Control Board (RWQCB). Do not drain trench water through the pipeline under construction.

3.13 MATERIAL REPLACEMENT

Remove and replace any trenching and backfilling material which does not meet the Specifications, at the Contractor's expense.

3.14 TRENCH WIDTHS

Pipe trench widths in the pipe zone will be limited as follows:

Pipe Diameter	Minimum Trench Width	Maximum Trench Width
4" through 12"	O.D. + 12"	O.D. + 16"
14" through 48"	O.D. + 16"	O.D. +24"

Trench width at the top of the trench will not be limited except where width of excavation would undercut the structural support of adjacent structures and footings. Where shoring or encasement is required, trench widths shall be increased accordingly.

3.15 TRENCH EXCAVATION

A. Perform all excavation regardless of the type, nature, or condition of the material encountered to accomplish the construction. Do not operate excavation equipment within 5 feet of existing structures or newly completed construction. Excavate with hand tools in these areas.

B. Excavate the trench to the lines and grades shown on the Plans with allowance for pipe thickness, sheeting and shoring if used, and for pipe base. If the trench is excavated below the required subgrade, refill any part of the trench excavated below the subgrade at no additional cost to the District with imported sand. Place the refilling material over the full width of trench in compacted layers not exceeding 6 inches deep to the established grade with allowance for the pipe base.

C. Trench depth shall accommodate the pipe and the pipe base at the elevations shown in the profile on the Plans. No pipe shall be installed without a designed profile unless approved by the District.

D. Construct trenches in rock by removing rock to a minimum of 6 inches below bottom of pipe and backfilling with imported sand.

3.16 LOCATION OF EXCAVATED MATERIAL

During trench excavation, place the excavated material only within the working area or within the areas shown on the Plans. Do not obstruct any roadways or streets. Conform to federal, state, and local codes governing the safe loading of trenches with excavated material.

3.17 LENGTH OF OPEN TRENCH

A. The total length of open trench shall not exceed 600 feet including excavation, pipeline installation and backfill in any one location.

B. Complete backfilling and temporary or first layer paving not more than 120 feet in the rear of pipelaying.

C. Where pipelines are located beneath or adjacent to existing paved roads, backfill all trenches at the end of each workday and place temporary or first layer of paving, or utilize recessed trench plates. Clean all new and adjacent existing paved surfaces of residual excavated and backfill materials. Perform dust control operations in these areas with a brush or vacuum type mobile street sweeper. No open trenches will be allowed in these areas.

D. Provide ingress and egress to buildings and property at all times. Provide traffic rated steel plates for covering for vehicular access and protect excavations which must remain open beyond the initial day of the excavation.

3.18 FOUNDATION STABILIZATION

After the required excavation has been completed, the District will inspect the exposed subgrade to determine the need for any additional excavation. It is the intent that additional excavation be conducted in all areas within the influence of the pipeline where unacceptable materials such as soft, spongy or deleterious materials exist at the exposed grade. Over excavation shall include the removal of all such unacceptable material that exists directly beneath the pipeline to a minimum width equal to the maximum trench width and to a depth determined by the District. Backfill the trench to the established subgrade of the pipe base with rock refill material for foundation stabilization. Place the foundation stabilization material over the full width of the trench and compact in layers not exceeding 6 inches deep to the required grade. Place imported sand on the compacted foundation stabilization and apply water to wash the sand into the voids of the rock refill material. Continue this procedure until the voids of the rock refill have been filled with imported sand. Do not apply water in such quantities that it will damage the integrity of the compacted foundation.

3.19 CONCRETE FOR BELOW GROUND INSTALLATIONS

Place concrete between the undisturbed ground and the pipe or fittings to be restrained or supported. Quantity or bearing area of the concrete against undisturbed ground shall be as shown on the Standard Drawings, Plans, or as directed by the District. Provide temporary support on the pipe, fittings, or valves until the concrete has obtained a 3-day cure. Place concrete such that the pipe joints, fittings, or valves are accessible for repairs. Spade or rod the concrete during placement to eliminate honeycombing. Backfilling of the trench adjacent to the concrete will not be allowed until the concrete has cured for at least 3 days. Allow concrete to cure for at least 7 days prior to subjecting the concrete to pipeline pressure. Where rapid set concrete mix has been used, the 3-day and 7-day cure time is not required. Backfill the rapid set concrete mix as soon as the concrete is hard (approximately one to two hours) and place pipeline into service.

3.20 TRENCH BACKFILLING

A. Place the specified thickness of pipe bedding material over the full width of

trench and compact to the specified relative compaction. Grade the top of the pipe base ahead of the pipelaying to provide firm, continuous, uniform support along the full length of the trench for the pipe, fittings, and valves.

B. Excavate bell holes at each joint to permit proper assembly and inspection of the entire joint. Fill and compact the area excavated for the joints with the pipe base material.

C. After the pipeline has been bedded and the cement mortar used in the exterior joints has set hard, place pipe zone material simultaneously on both sides of the pipe, fittings, and valves, keeping the level of backfill the same on each side. Carefully place the material around the pipe so that the pipe barrel is completely supported and that no voids or un-compacted areas are left beneath the pipe. Use particular care in placing material on the underside of the pipe to prevent lateral movement during subsequent backfilling. Do not drop sharp, heavy pieces of material directly onto the pipe or the tamped material around the pipe.

D. Compact material in the pipe zone by hand tamping only. Care shall be exercised in backfilling to avoid damage to pipe coatings and polyethylene encasement.

E. Push the native earth backfill or imported material for backfill carefully onto the imported sand previously placed in the pipe zone. Do not permit free fall of the material until at least 2 feet of cover is provided over the top of the pipe. Compact backfill material in the trench zone to the specified relative compaction by mechanical compaction or hand tamping.

F. Place and compact pipe zone material in layers not exceeding 12 inches of compacted thickness. Place and compact native earth or imported material for backfill in the middle zone in layers not exceeding 6 inches of compacted thickness.

3.21 MECHANICAL COMPACTION OR HAND TAMPING

Place imported sand and backfill materials in uniform layers of the indicated thickness. Compact each layer to the required minimum relative compaction at the optimum moisture content. Do not use heavy duty compaction equipment with an overall weight in excess of 125 pounds until backfill has been completed to a depth of 2 feet over the top of pipe. Do not use high impact hammer type equipment except where the pipe manufacturer warrants in writing that such use will not damage the pipe.

3.22 DISPOSAL OF EXCESS EXCAVATED MATERIAL

Dispose of excess excavated material offsite. Contractor shall make his own arrangements for the disposal of the excess material and bear all costs incidental to such disposal.

3.23 FINAL CLEAN-UP AND STRAW WATTLES

A. After backfilling, grade the right-of-way to the contours of the original ground and match the adjacent undisturbed ground. Make surfaces free of all cleared vegetation, rubbish and other construction wastes. Dispose of all excavated or surface rocks and lumps which cannot be readily covered by

spreading. On slopes 35-percent and steeper or where rainfall would create an erosion problem as determined by the District's Representative, provide straw wattles across the backfilled trench at the locations shown on the Standard Drawings, Plans, or as directed by the District's Representative. Place wattles across the backfilled trench and level with the contours of the slope.

B. Replace in kind street improvements, such as curbs and gutters, barricades, traffic islands, signalization, fences, signs, mail boxes, landscaping, irrigations systems and other existing improvements that are cut, removed, damaged, or otherwise disturbed by the construction.

END OF SECTION

SECTION 15044 – HYDROSTATIC TESTING OF PRESSURE PIPELINES

PART I - GENERAL

1.1 DESCRIPTION

This section describes the requirements and procedures for pressure and leakage testing of all ductile iron (DI) and polyvinyl chloride (PVC) pressure mains.

1.2 RELATED WORK SPECIFIED ELSEWHERE

A. Disinfection of Pipe: Appendix A
B. Ductile Iron Pipe and Fittings: Section 15056
C. PVC Pressure Pipe: Section 15064

1.3 SUBMITTALS

A. Submit shop drawings in accordance with Standard Specification Section 01300.

B. Submit plan testing pressure pipeline. Plan should indicate source of water to fill pipeline, locations of temporary air release valves and blow-offs, equipment and materials required to deliver the potable water to the testing area, temporary thrust block locations and proposed point of discharge of the test water.

C. Submit request for potable water source from the District 96 hours in advance of testing date.

1.4 REQIDREMENTS PRIOR TO TESTING

A. All piping, valves, fire hydrants, services, and related appurtenances shall be installed prior to testing.

B. The pipe trench shall have trench zone backfill placed and compacted with a minimum of 3.0-feet of material over the pipe.

C. All concrete anchor blocks shall be allowed to cure until a minimum strength of 2,500 psi is achieved before testing.

D. Pressure tests on exposed and aboveground piping shall be conducted only after the entire piping system has been installed and attached to pipe supports, hangers or anchors as shown on the Approved Plans.

1.5 CONCURRENT HYDROSTATIC TESTING AND DISINFECTION OF PIPELINES

Hydrostatic testing of pipelines shall be performed prior to or concurrently with the disinfection operations. In the event repairs are necessary, as indicated by the hydrostatic test, the District may require additional disinfection testing. Any costs associated with additional disinfection testing after said repairs shall be borne by the Contractor at no additional cost to the District.

1.6 CONNECTION TO EXISTING MAINS

Hydrostatic testing shall be performed prior to connections to existing mains. District authorization for connection to the existing system shall be given only on the basis of acceptable hydrostatic, disinfection and bacteriological test results. Connection to existing mains shall be performed in accordance with Section 15000, General Piping Systems and Appurtenances.

PART 2 - MATERIALS

2.1 WATER

A. Potable water shall be used for hydrostatic testing of potable mains when such testing is performed separately from disinfection operations.

B. Potable water shall be supplied by a District-approved source. Make-up water for testing shall also be potable water.

C. A chlorinated water solution, in accordance with section 15041, shall be used to charge the line and for make-up water when hydrostatic testing and disinfection operations are combined.

2.2 CONNECTIONS

A. Testing water shall be supplied through a metered connection equipped with a backflow prevention device in accordance with Section 15112 at the point of connection to the potable water source used.

B. The Contractor shall provide any temporary piping needed to deliver potable water to the piping that is to be tested.

PART 3 - EXECUTION

3.1 GENERAL

A. The Contractor shall provide the District with a minimum of four working days notice prior to the requested date and time for hydrostatic tests.

B. The Contractor shall furnish all labor, materials, tools, and equipment for testing.

C. Temporary blocking during the tests will be permitted only at temporary plugs, caps or where otherwise directed by the District.

D. All valves and appurtenances shall be operated during the test period. The test shall be conducted with valves in the open position.

E. At the onset of testing, all valves, air vacuum assemblies, blow offs, and services shall be monitored for possible leakage and repairs made, if necessary, before the test proceeds. The appurtenances shall be monitored through the duration of the testing.

F. For pipe with porous lining, such as cement mortar, the pipe shall be filled with water and placed under a slight pressure for a minimum of two working days prior to the actual hydrostatic test.

3.2 FIELD TEST PROCEDURE

A. Before applying the specified test pressure, care shall be taken to release all air within the pipe and appurtenances to be tested. Air shall be released through services, fire hydrants, air release valves, or other approved locations.

B. A four (4) hour hydrostatic pressure test shall be performed after the pipe and all appurtenances have been installed and after any trench backfill compaction with heavy- duty compaction equipment has been completed. The hydrostatic test pressure shall be 50 psi above the pressure class of the pipe at the lowest point in the section being tested and shall be at least equal to the design class of the pipe at the highest point in the line.

The test pressure shall be applied and continuously maintained by pumping for a period of four (4) hours. During the pumping phase of the test, the test pressure shall be maintained at not less than 95% of the specified test pressure at all times.

At the end of the fourth (4th) hour, the pressure shall meet the requirements stated above. Pumping shall then be discontinued for one hour and the drop in pressure shall be recorded. Pumping shall then be resumed to restore the initial test pressure, and the quantity of water pumped into the line shall be accurately measured. This measured quantity shall not exceed that which would result from leakage at the following rates:

1. The allowable leakage for steel (flanged or welded) and ductile iron (flanged) pipe shall be zero.

2. The leakage for polyvinyl chloride (PVC) pipe, and for steel or ductile- iron pipes with rubber joints shall be considered as the total amount of water pumped into the pipe system after the fifth (5th) hour of testing. Allowable leakage during the fifth (5th) hour shall be in accordance with the following formula:

$$\frac{2 \text{ gal} \times \text{nominal diameter of pipe (in)} \times \text{length of pipe (ft)}}{24 \text{ (hrs)} \times 5{,}280 \text{ (ft)}}$$

If the leakage exceeds the allowable loss, the leak points shall be located

and repaired as required by the District. All defective pipe, fittings, valves and other appurtenances discovered shall be removed and replaced with sound material. Additional disinfection shall be performed as necessary per Section 15041. The hydrostatic test shall be repeated until the leakage does not exceed the rate specified above. All visible leaks shall be similarly repaired.

END OF SECTION

SECTION 15056 – DUCTILE IRON PIPE AND FITTINGS

PART 1 - GENERAL

1.1 DESCRIPTION

This section includes materials and installation of ductile-iron pipe and fittings for potable and recycled water systems.

1.2 REFERENCE STANDARDS

The publications listed below form part of this specification to the extent referenced and are referred to in the text by the basic designation only. Reference shall be made to the latest edition ofsaid standards unless otherwise called for.

ANSI B1.1	- Unified Inch Screw Threads
ASTM A193	- Standard Specification for Alloy-Steel and Stainless Steel Bolting Materials for High-Temperature Service
ASTM A 307	- Standard Specification for Carbon Steel Bolts and Studs
ASTM C 150	- Standard Specification for Portland cement
ASTM A 536	- Standard Specification for Ductile Iron Castings
AWWA C104	- Cement Mortar Lining for Ductile Pipe and Fittings for Water Mains
AWWA C105	- Polyethylene Encasement for Ductile Iron Pipe
AWWA C110	- Ductile Iron Fittings
AWWA C111	- Rubber-Gasket Joints for Ductile Iron Pipe and Fittings
AWWA C115	- Flanged Ductile Iron Pipe with Threaded Flanges
AWWA C150	- Thickness
AWWA C151	- Ductile Pipe, Centrifugally Cast
AWWA C153	- Ductile Iron Compact Fittings
AWWA C217	- Cold-Applied Petroleum Wax Tape Coatings
AWWA C600	- Installation of Ductile Iron Water Mains
AWWA C602	- Cement-Mortar Lining of Water Pipelines
AWWA C606	- Grooved and Shouldered Type Joints

1.3 RELATED WORK SPECIFIED ELSEWHERE

A. EVMWD Standard Drawings
B. Shop Drawings and Submittals: Section 01300
C. Trenching, Backfilling and Compacting: Section 02223
D. Cast-in-Place Concrete: Section 03300
E. Field Painting and Coating: Section 09902
F. General Piping System and Appurtenances: Section 15000
G. Disinfection of Pipe: Appendix A
H. Hydrostatic Testing of Pressure Pipe: Section 15044

1.4 SERVICE APPLICATION

Ductile-iron pipe shall be used only in specific areas, locations, and uses allowed by the District. A corrosion analysis shall be performed to determine if a cathodic protection system is required.

1.5 SUBMITTALS

The following items shall be submitted in accordance with Section 01300 and complete the District review process prior to shipping of ductile-iron pipe and fittings:

A. An affidavit of compliance with AWWA CI04, C110, C111, C115, CI 50, CI 51, CI 53, and the requirements of this specification.

B. Manufacturer's information relating to dimensions, weight, thickness, lining and coating for pipe and fittings conforming to AWWA C151, C110 and C153.

C. Copy of current test reports confirming the hydrostatic design of AWWA C153 fittings and chemical analysis in accordance with Section 53-5.3 and 53-13, respectively.

D. Copy of test report on physical properties of rubber compound used in gaskets.

E. Calculations supporting selected wall thickness.

F. Calculations demonstrating that each proposed restrained joint arrangement can resist the applied forces.

G. Submit tabulated layout schedule and drawing showing location and dimensions of pipe and fittings including:

1. Pipe station and invert elevation at each change of grade and alignment.

2. Components of curves and bends, both in horizontal and vertical alignment. Including pipe lengths required (to create curvature) and

3. The limits of each segment of pipe class, (indicate pressure or thickness class), restrained joints and deflection angle between pipe lengths. For combined horizontal and vertical curves provide true angular deflection at the joint.

4. Locations and details of bulkheads for field hydrostatic testing of the pipeline.

5. Locations of closures for length adjustment and for construction convenience.

6. Locations of appurtenances and other points for draining and/or filling.

7. Locations of valves and other mechanical equipment.

H. Joint details.

I. Cathodic protection materials.

1.6 QUALITY ASSURANCE

A. The manufacturer of each shipment of pipe shall be required to supply a statement certifying that each lot or load of pipe and fittings has been subjected to and met the tests specified for ductile-iron pipe and fittings per AWWA C110, C111, C115, C150, Cl 51, and Cl 53, as applicable.

B. Ductile-iron pipe shall bear indelible identification markings as required by AWWA C151.

C. All pipe shall have a home mark on the spigot end to indicate proper penetration when the joint is made.

1.7 DELIVERY, STORAGE, AND HANDLING

Delivery, storage, and handling of ductile-iron pipe and fittings shall follow the recommendations of AWWA C600 and as specified herein:

A. Handling of pipe shall be performed with lifts, cranes, or other suitable equipment and devices. Slings, hooks, or pipe tongs shall be padded and used in such a manner as to prevent damage to the pipe, linings, and coatings. The pipes shall not be dropped or dragged.

B. During transport, the pipe shall be supported and secured against movement using padded devices in such a manner to prevent damage.

C. Stored pipe shall be protected from damage and kept free from dirt and foreign materials by closing the ends of the pipe. Other pipeline materials shall be protected by appropriate packaging or wrapping. Gaskets shall be stored in a cool location out of direct sunlight. Bolts, nuts, and washers shall be handled and stored in a dry location in a manner that will ensure proper use with respect to types and sizes.

D. Pipe laid out for installation shall be placed on earth berms or timber cradles adjacent to the trench in the numerical order of installation.

E. Maintain plastic end caps on all pipe and fittings in good condition until the pipe is ready to be installed in the trench. Periodically open the plastic end caps and spray clean potable water inside the pipe for moisture control.

F. Under no circumstances shall ropes or other devices be attached through the fitting's interior for handling.

1.8 POLYETHYLENE ENCASEMENT

A. Polyethylene encasement shall be provided for all buried ductile iron pipe and fittings in accordance with Section 15000.

PART 2-MATERIALS

2.1 DUCTILE-IRON PIPE

A. Ductile iron pipe shall be manufactured in accordance with ANSI/AWWA C150/21.50 and ANSI/AWWA C151/21.51 and shall be of the sizes and thickness or pressure classes shown on the plans.

B. Minimum thickness class for pipe having threaded flanges or threaded shoulders shall be Class 53.

C. Minimum thickness class for pipe having grooved end joints shall be as shown in the following table unless otherwise noted on the Drawings:

Pipe and Fitting Size (Diameter, in.)	Wall Thickness per AWWA C606
16 and smaller	Class 53
18	Class 54
20	Class 55
24	Class 56

2.2 FITTINGS

A. General:

1. Ductile-iron fittings shall be manufactured per AWWA C110, C111, C115, CI50, CI51, and CI53. Gray-iron and cast-iron fittings or flanges shall not be used.

2. Ductile-iron fittings manufactured per AWWA C153 shall be installed on mains 12-inch and smaller only.

3. Joints for fittings shall be mechanical joint, flanged, or push-on in accordance with AWWA CI 10, CI 11, and C153.

4. Except as amended herein, or otherwise shown on the Approved Plans, joints for ductile-iron fittings shall have a pressure rating equal to or greater than the adjacent piping.

5. Joints in buried piping may be of the push-on, flanged or mechanical- joint type per AWWA CI 11 except where particularly specified on the Approved Drawings.

6. Joints that are aboveground, within structures, or submerged shall be flanged unless otherwise shown on the Approved Plans.

B. Unless otherwise specified, ductile-iron flanges shall be in accordance with AWWA CI 15, rated at a working pressure of 250 psi. Where required

in order to connect to the flanges of 250 psi butterfly valves, or as otherwise shown on the approved plans, ductile-iron flanges shall be compatible with AWWA C207, Class "F".

Maximum working pressure of flanges shall as specified in AWWA or ASME/ANSI. Flanges shall be solid and integrally cast per AWWA C110 or shop-threaded per AWWA CI 15. Hollow-back flanges, gray-iron or cast-iron flanges and threading of flanges in the field are not permitted.

Where threaded flanges are used, the pipe or spool piece to which they are connected will be hydrostatically tested at the shop in the presence of the Engineer prior to

installation. The pipe section or spool piece shall be hydrostatically tested for 15 minutes at the pressure rating of the flanges. No leaks shall be permitted.

C. Plain ends shall conform to the requirement of AWWA CI51 and to the dimensions included within AWWA CII O to accept a mechanical joint, push-on joint, flanged coupling adaptor, flexible coupling, or grooved coupling.

D. All pipe and fittings shall be fusion bonded epoxy lined and coated in accordance with AWWA CI 16 - Protective Fusion-Bonded Epoxy Coatings for the Interior and Exterior Surfaces of Ductile-Iron and Gray-Iron Fittings.

23 GASKETS

Gaskets shall be furnished in accordance with Section 15000.

24 BOLTS AND NUTS FOR FLANGES

Bolts and nuts shall be furnished in accordance with Section 15000.

25 COUPLINGS

Couplings shall be furnished in accordance with Section 15000.

26 PAINTING AND COATING

All pipe and fittings shall be fusion bonded epoxy lined and coated in accordance with AWWA C116 - Protective Fusion-Bonded Epoxy Coatings for the Interior and Exterior Surfaces of Ductile-Iron and Gray-Iron Fittings.

27 IMPORTED GRANULAR MATERIAL FOR PIPE AND TRENCH ZONES

Imported granular material for use in pipe and trench zones shall be in accordance with Section 02223.

28 CONCRETE

Concrete for thrust and anchor blocks shall be in accordance with Section 03300.

2.9 POLYETHYLENE ENCASEMENT

Polyethylene encasement shall be furnished in accordance with Section 15000.

2.10 TRACER WIRE

Tracer wire shall be furnished in accordance with Section 15000.

2.11 WARNING/IDENTIFICATION TAPE

Warning/Identification tape shall be furnished in accordance with Section 15000.

PART 3 - EXECUTION

3.1 GENERAL

At all times when the work of installing pipe is not in progress, including worker break times, ends of the pipe shall be closed with a vermin-proof and child-proof cap or plug. Do not permit trench water to enter the pipe. Do not place tools, clothing, or other materials in the pipe. The Contractor shall maintain the interior of the pipe in a sanitary condition free from foreign materials.

3.2 TRENCHING, BACKFILLING AND COMPACTING

Trenching, backfilling and compacting shall be performed in accordance with Section 02223.

3.3 DEWATERING

The Contractor shall provide and maintain at all times during construction ample means and devices to promptly remove and dispose of all water from any source entering trench excavations or other parts of the work in accordance with Section 02223. Any damage caused by flooding of the trench shall be the Contractors responsibility.

Dewatering shall be performed by methods that will maintain a dry excavation, preservation of the final lines and grades and protection of all utilities. If flooding of the trench does occur, the Contractor shall immediately dewater and restore the trench. Damaged or altered pipeline appurtenances or trench materials shall be repaired or replaced as directed by the Engineer.

3.4 PIPE INSTALLATION

The Contractor shall furnish and install all pipe, specials, fittings, closure pieces, valves, supports, bolts, nuts, gaskets, jointing materials, and all other appurtenances as shown on the Approved Plans and as required to provide a complete and workable installation. Install pipe in the trench as follows:

A. Inspect each pipe and fitting before lowering the pipe or fitting into the trench. Inspect the interior and exterior protective coatings. Patch damaged

areas in the field with material recommended by the protective coating manufacturer. Thoroughly clean the ends of the pipe. Remove foreign matter and dirt from inside of the pipe and keep pipe clean during and after installation.

B. Install pipe according to the manufacturer's approved order of installation. Install pipes uphill if the grade exceeds 10%. Lower the pipe onto the bedding at the proper lines and grades.

C. The manufacturer's printed installation guide outlining the radius of curvature that can be negotiated with pipe sections of various lengths shall be followed, except they shall not exceed the deflections allowed in AWWA C600 according to joint type. Combined deflections at rubber gasket or flexible coupling joints shall not exceed that recommended by the manufacturer.

D. The pipe shall have firm bearing along its full length, and bell holes shall be provided at each joint to permit visual inspection of the joint and prevent the pipe from being supported by the bell end or coupling.

E. Pipe Assembly:

1. Push-On Type: Assemble the pipe joint using a lubricant selected from the Approved Materials List. Insert the spigot end into the bell or coupling to the proper insertion mark. Check that the elastomeric ring has not left the groove during assembly by passing a feeler gauge around the completed joint. Drive spigot ends of the pipe into bell ends in accordance with the manufacturer's recommendations. Stabbing shall not be permitted.

2. Mechanical Joint Type: Assembly of mechanical joint fittings shall be m accordance with the manufacturer's recommendations regarding installation.

F. During installation operations, do not place tools, clothing, or other materials in the pipe.

G. At all times when pipe laying is not in progress, the open end of the pipe shall be closed with a tight-fitting cap or plug to prevent the entrance of foreign matter into the pipe. These provisions shall apply during the break periods as well as overnight. In no event shall the pipeline be used as a drain for removing water which has infiltrated into the trench.

The Contractor shall maintain the inside of the pipe free from foreign materials and in a clean and sanitary condition until its acceptance by the Owner. When the work requires, and the size of the pipe allows entry of personnel into the pipe, the Contractor shall comply with all Federal and State regulations for confined space entry. Work inside pipelines shall not be undertaken until all the tests and safety provisions of the Code of

Federal Regulations 1910.146, and the General Industry Safety Orders of the California Code of Regulations, Title 8, Section 5159 for conformed space entry have been performed and the area is verified as safe to enter.

3.5 INSTALLING BURIED FITTINGS

Buried ductile iron fittings shall be installed in accordance with Section 15056.

A. The District's Representative will inspect all fittings prior to installation for damage to the interior protective coatings. Patch damaged areas in the field with material similar to the original.

B. For mechanical joint fittings, clean the bell socket and the plain end of the pipe of all foreign material and dirt. Place the gland on the pipe spigot with the lip extension toward the plain end. Lubricate the pipe spigot and gasket. Use the same lubricant as supplied by the pipe manufacturer. Install the gasket on the pipe spigot with the narrow edge of the gasket toward the plain end. Insert the pipe into the bell socket and press the gasket firmly into the gasket recess. Keep the joint straight during assembly. Push the gland towards the socket and center it around the pipe with the gland lip against the gasket. Insert bolts and hand tighten nuts. Make joint deflection after assembly but before tightening bolts. Uniformly tighten bolts and nuts in a progressive diametrically opposite sequence, and torque nuts to 75- to 90-foot-pounds with a calibrated torque wrench.

C. For push-on joint fittings, clean the bell ends of the fitting of all foreign material and dirt. Insert the gasket in the groove of the bell and make sure the gasket faces the correct direction. Feel that the gasket is completely and evenly seated in the groove. When pipe is cut in the field, bevel the plain end prior to installation. Lubricate the exposed gasket surface and the beveled pipe spigot with the same lubricant supplied by the pipe manufacturer. Insert the spigot into the bell and force it slowly into position, keeping the joint straight while pushing. Make joint deflection after the joint is assembled.

D. When necessary to deflect pipe with push-on joints from a straight line in either the horizontal or vertical plane, do not exceed the following joint deflection angles for buried fittings. The angles shown are for each joint of a ductile iron fitting and are maximum deflections.

Nominal Pipe Size (inches)	Joint Deflection (degrees)
12 and smaller	4
14 to 20	3
24	2.5

Deflections of pipe with restrained joints shall not exceed a maximum of 80-percent of the manufacturer's recommended maximum deflection.

3.6 FLANGED PIPE AND FITTINGS

Flanged connections shall be installed where indicated on the Approved Drawings.

A. Bolt holes shall straddle the horizontal and vertical centerlines.

B. The bolts, nuts and flange faces shall be thoroughly cleaned by wire brush prior to assembly.

C. Bolts, nuts and washers shall be lubricated with a District-approved anti-seize compound.

D. Assemble all bolts, nuts and washers in the flange.

E. All nuts shall be tightened in an alternating "star" pattern to the manufacturer's recommended torque with a calibrated torque wrench.

F. If flanges leak under pressure testing, loosen or remove the nuts and bolts, reset or replace the gasket, reinstall or retighten the bolts and nuts, and retest the joints. Joints shall be watertight. Replace galled, cracked, or distorted bolts and nuts.

G. Coat all exposed portions of bolts, nuts and washers with an anti-seize compound in polyethylene wrap in accordance with Section 15000.

H. Coat the exterior of exposed flanges, bolts and nuts located aboveground or within vaults in accordance with Section 09902.

3.7 POLYETHYLENE ENCASEMENT

Polyethylene encasement shall be installed in accordance with Section 15000.

3.8 MECHANICAL JOINT CONNECTIONS

Mechanical joint connections shall be installed in accordance with Section 15000.

3.9 COUPLINGS FOR DUCTILE-IRON PIPE

Mechanical type flexible couplings shall be installed where shown on the Plans and in accordance with Section 15000.

3.10 CONCRETE

Concrete thrust and anchor blocks shall be installed in accordance with Section 03300 and the Standards Drawings. Prior to filling the pipeline with water, refer to Section 03300 for the minimum concrete curing time required.

3.11 TRACER WIRE

Tracer wire shall be installed in accordance with Section 15000.

3.12 WARNING/IDENTIFICATION TAPE

Warning/Identification tape shall be installed in accordance with Section 15000.

3.13 DISINFECTION AND BACTERIOLOGICAL TESTING

Disinfection, bacteriological testing, and flushing shall be performed in accordance with the District's chlorination and bacteriological testing protocol as provided in Appendix A of these specifications.

3.14 HYDROSTATIC TESTING

Field hydrostatic testing shall be performed in accordance with Section 15044.

END OF SECTION

SECTION 15064 – PVC PRESSURE PIPE (AWWA C900/C905)

PART 1 - GENERAL

1.1 DESCRIPTION

This section includes materials, installation, and testing of polyvinyl chloride (PVC) pressure pipe conforming to AWWA C900 and C905.

1.2 REFERENCE STANDARDS

The publications listed below form part of this specification to the extent referenced and are referred to in the text by the basic designation only. Reference shall be made to the latest edition of said standards unless otherwise called for.

ASTM D1784	- Standard Specification for Rigid Polyvinyl Chloride (PVC) Compounds and Chlorinated Polyvinyl Chloride (CPVC) Compounds
ASTM B16.42	-
ASTM A307	- Standard Specification for Carbon Steel Bolts and Studs, 60,000 PSI Tensile Strength
ASTM A563	- Standard Specification for Carbon and Allow Steel Nuts
ASTM B62	- Standard Specification for Composition Bronze or Ounce Metal Castings
ASTM D1248	- Standard Specification for Polyethylene Plastics Extrusion Materials for Wire and Cable
AWWA C110	- Ductile-Iron and Gray-Iron Fittings, 3-inch through 48-inch, for Water and other Liquids
AWWA C111	- Rubber-Gasket Joints for Ductile-Iron Pressure Pipe & Fittings
AWWA C153	- Ductile-Iron Compact Fittings, 3-inch through 16-inch, for Water And other Liquids
AWWA C900	- Polyvinyl Chloride (PVC) Pressure Pipe and Fabricated Fittings, 4-inch through 12-inch for Water Distribution
AWWA C905	- Polyvinyl Chloride (PVC) Pressure Pipe and Fabricated Fittings, 14-inch through 48-inch for Water Transmission & Distribution

1.3 RELATED WORK SPECIFIED ELSEWHERE

A. Standard Drawings.
B. Trenching, Backfilling, and Compacting: Section 02223.
C. General Concrete Construction: Section 03300.
D. Field Painting and Coating: Section 09902.
E. General Piping Systems and Appurtenances: Section 15000.
F. Disinfection of Piping: Appendix A
G. Pressure Testing of Piping: Section 15044.

1.4 SUBMITTALS

A. Submit shop drawings in accordance with Standard Specification Section 01300.

B. Submit manufacturer's catalog data and descriptive literature for C900/C905 PVC pipe. Show dimensions, materials of construction and typical identification markings.

C. Provide affidavit of compliance with AWWA C900/C905.

D. Submit copies of the following required tests conducted on the project pipe by the manufacturer:

1. Quick-burst strength of pipe and couplings.

2. Flattening resistance of pipe.

3. Record of additional tests after test sample failure.

1.5 INSPECTION AND FIELD VERIFICATION

A. The District's Representative may inspect materials, productions, and testing at manufacturer's plant.

B. Where new pipelines are to be connected to existing waterlines of the District, the Contractor shall verify in the field the location, elevation, pipe material, pipe outside diameter, and any other characteristics of the existing waterline before proceeding with the pipe installation. This field verification shall be performed in the presence of the District's Representative.

PART 2 - MATERIALS

2.1 PVC PIPE

Pipe shall be polyvinyl chloride (PVC) conforming to AWWA C900/C905 with material cell classification 12454-8 per ASTM D 1784. Provide standard pipe having integral bell and spigot with elastomeric gasket and cast iron equivalent outside diameter. Provide pipe in standard 20-foot laying lengths. Straight pipe sections with plain ends for use with high deflection couplings are not available. Random lengths will not be permitted. Provide Class 165 pressure rating for system pressures below 90 psi and Class 235 for system pressures exceeding 90 psi, but less than 160 psi on mains not directly connected to a pumping facility.

2.2 HIGH DEFLECTION COUPLINGS

Provide polyvinyl chloride (PVC) or ductile iron (DQ couplings with twin elastomeric gaskets which allow 2 degrees of deflection at each gasket for a total of 4 degrees per coupling. Provide couplings for cast iron equivalent outside diameter. Couplings shall be selected from the Approved Materials List.

2.3 CLOSURE/REPAIR COUPLINGS

Provide polyvinyl chloride (PVC) couplings with twin elastomeric gaskets which are designed to connect plain ends of straight pipe. Provide couplings for cast iron equivalent outside diameter and Class 200 pressure rating. Do not deflect pipe in these couplings. Closure/Repair Couplings shall be selected from the Approved Materials List.

2.4 FITTINGS

Ductile iron fittings for use with C900/C905 PVC pressure pipe shall be in accordance with Section 15056, Ductile Iron Pipe and Fittings. Fittings for use with the Pump to Waste Line shall be lined and coated per AWWA C116 (Fusion Bonded Epoxy Lining and Coating).

2.5 FLANGES

Flanges on ductile iron fittings shall conform to AWWA C110 or ANSI B16.42 Class 150. Refer to Section 15056.

2.6 BOLTS, NUTS AND GASKETS FOR FLANGES

Bolts, nuts and gaskets shall be in accordance with Section 15000.

2.7 OUTLETS

A. For outlets 2 inches and smaller with working pressures 150 psi or less, attach a service saddle and corporation stop to the pipe. Provide service saddles with full width, cast bronze bodies conforming to ASTM B 62, 0-ring gaskets, and iron pipe threads. Provide Type 304 stainless steel double band straps with four bolts or a single wide strap with four bolts. All stainless steel shall be fully passivated for enhanced corrosion resistance. All saddles shall be pre-sized at the factory for installation on cast iron equivalent outside diameter PVC pipe conforming to AWWA C900. Service saddles shall be selected from the Approved Materials List.

B. For outlets 2 1/2 inches and larger, use a ductile iron tee with a flanged outlet. Sizes below 3 inches will require a reducing fitting.

2.8 COUPLINGS

Flexible pipe couplings and flange coupling adapters shall be in accordance with Section 15000 and shall be selected from the Approved Materials List.

2.9 TRACER WIRE

Tracer wire shall be in accordance with Section 15000.

2.10 WARNING/IDENTIFICATION TAPE

Warning/Identification tape shall be in accordance with Section 15000.

2.11 MARKER POSTS

Marker posts shall be furnished in accordance with Section 15000 and the District Standard Drawings.

PART 3 - EXECUTION

3.1 PRODUCT MARKING

Legibly mark pipe in blue at 5-foot intervals and each coupling to identify the nominal pipe size, OD base, PVC, dimension ratio number and pressure class, AWWA C900/C905, and the seal of the testing agency that verified the suitability of the material for potable water service.

3.2 DELIVERY AND TEMPORARY STORAGE OF PIPE

A. Ship, store, and place pipe at the storage yard or installation site by supporting the pipe uniformly. Avoid scratching the pipe surface. Do not stack higher than 4-feet nor stack with weight on bells. Cover to protect from sunlight.

B. Do not install pipe that is gouged or scratched forming a clear depression.

C. Do not install pipe contaminated with a petroleum product (inside or outside).

D. Do not install any pipe that shows evidence of exposure to sunlight, age, surface deterioration, or other physical damage. The decision of the District's Representative shall be final as to the acceptability of the pipe to be installed.

3.3 HANDLING OF PIPE

Lift pipes with mechanical equipment using wide belt slings or a continuous fiber rope which avoids scratching the pipe. Do not use cable slings or chains. Pipes up to 12 inches in diameter may be lowered by rolling on two ropes controlled by snubbing. Pipes up to 6 inches in diameter can be lifted by hand.

3.4 SANITATION OF PIPE INTERIOR

A. During laying operations, do not place tools, clothing, or other materials in the pipe.

B. When pipelaying is not in progress, including lunch breaks, close the ends of the installed pipe with a plug to deter contamination of pipe.

3.5 PIPE LAYOUT FOR STRAIGHT AND CURVED ALIGNMENTS

A. Use integral bell end pipe for straight alignments and for radii greater than 1,150 feet.

B. Use the following various combinations of plain end pipe lengths with high deflection couplings and integral bell end pipe for curved alignments in both horizontal and vertical directions. Do not bend pipe between couplings. Saw cut integral bell end of standard pipe and bevel end for use with deflection couplings. Use 9.5-foot plain end pipe lengths with deflection couplings for all radii between 140 feet to 270 feet. Use 19-foot plain end pipe lengths with deflection couplings for all radii between 270 feet to 560 feet. Use an integral bell end pipe length joined together with a 19-foot plain end pipe length to form a chord. Use deflection couplings on each end of the chord and continue this combination through the curved alignment for all radii between 560 feet to 1,150 feet. Pipe lengths shorter than 9 feet will not be used unless specifically authorized by the District's Representative.

3.6 INSTALLING PIPE IN TRENCH

A. See Standard Specification Section 02223 for earthwork requirements.

B. Inspect each pipe and fitting before lowering into the trench. Clean ends of pipe thoroughly. Remove foreign matter and dirt from inside of pipe and keep clean during and after laying.

C. Handle pipe in a manner to avoid any damage to the pipe. Do not drag pipe over the ground, drop it onto the ground, or drop objects on it. Do not drop or allow pipe to fall into trenches.

D. Laying tolerances for the installed pipe shall not vary greater than 0.3-foot horizontally, or greater than 0.1-foot vertically from the alignment and elevations shown on the Drawings.

E. Grade the bottom of the trench to the line and grade to which the pipe is to be laid, with allowance for pipe thickness. Remove hard spots that would prevent a uniform thickness of pipe base material (imported sand). Before laying each section of the pipe, check the grade with a straightedge and correct any irregularities found. The trench bottom shall form a continuous

and uniform bearing and support for the pipe at every point between bell holes, except that the grade may be disturbed for the removal of pipe handling slings.

F. At the location of each joint, dig bell holes in the bottom of the trench and at the sides to permit visual inspection of the entire joint and to prevent the pipe from being supported by the bell end or fitting.

G. Keep the trench in a dewatered condition during pipelaying. Removal of water shall be in conformance with Standard Specification Section 02223.

H. At all times when pipe laying is not in progress, the open end of the pipe shall be closed with a tight-fitting cap or plug to prevent the entrance of foreign matter into the pipe. These provisions shall apply during the break periods as well as overnight. In no event shall the pipeline be used as a drain for removing water which has infiltrated into the trench. The Contractor shall maintain the inside of the pipe free from foreign materials and in a clean and sanitary condition until its acceptance by the Owner.

3.7 ASSEMBLING PIPE JOINTS

A. The spigot and integral bell or coupling shall be dirt free and slide together without displacing the rubber ring gasket. Lay the pipe section with the integral bell facing the direction oflaying.

B. Clean the groove of the bell or coupling of all foreign materials. If the gasket groove is dirty or contains debris, carefully remove the gasket and clean the groove. Insert the gasket back into the groove of the bell or coupling prior to installation. Observe the correct direction of the shaped gasket. Feel that the gasket is completely and evenly seated in the groove.

C. Mark the full insertion depth on the spigot end of the pipe. This mark indicates when the pipe is fully inserted into toe bell or coupling. Lubricate the exposed gasket surface and the beveled spigot up to the full insertion mark with the lubricant supplied by the pipe manufacturer. For repair couplings, lubricate pipe for the entire distance the coupling will travel on the pipe. If the lubricated pipe end touches dirt, clean the pipe end and reapply lubricant.

D. Insert the spigot into the bell or coupling and force it slowly into position.

E. Check that the rubber ring gasket has not left the groove during assembly by passing a feeler gage around the completed joint.

3.8 INSTALLING BURIED FITTINGS

Buried ductile iron fittings shall be installed in accordance with Section 15056.

3.9 INSTALLING FLANGED JOINTS

Flanged ductile iron joints shall be installed in accordance with Section 15056.

3.10 INSTALLING SERVICE SADDLES

A. Place the service saddle on the pipe and hand tighten the nuts while positioning the saddle in its final location. Uniformly tighten the nuts in a progressive diametrically opposite sequence and torque with a calibrated torque wrench to the saddle manufacturer's recommended values.

B. Connect a corporation stop to the saddle per Standard Specification Section 15100. Apply Teflon joint compound or tape to the male threads before installing the corporation stop. Make joints watertight.

C. Mount a tapping machine on the corporation stop to cut a hole in the pipe with a shell type cutter made specifically for PVC pipe. Do not use other devices or hand equipment to bore through the pipe wall.

3.11 INSTALLING TRACER WIRE

Tracer wire shall be installed in accordance with Section 15000.

3.12 INSTALLING WARNING/IDENTIFICATION TAPE

Warning/Identification tape shall be installed in accordance with Section 15000 and the Standard Drawings.

3.13 SETTING MARKER POSTS

Marker posts shall be installed in accordance with Section 15000.

3.14 PRESSURE TESTING

See Standard Specification Appendix A for pressure testing requirements.

3.15 DISINFECTION

See Standard Specification Section 15041 for chlorination requirements.

END OF SECTION

APPENDIX "I"

ELSINORE VALLEY
MUNICIPAL WATER DISTRICT
(EVMWD)

NEW WATER MAIN CHLORINATION AND BACTERIOLOGICAL TESTING PROTOCOL

Elsinore Valley Municipal Water District

Our Mission...
EVMWD will provide reliable, cost-effective, high quality water and wastewater services that are dedicated to the people we serve.

New Water Main Chlorination and Bacteriological Testing Protocol

Preparation:

1. An appropriate water source will be determined by the EVMWD District representative based on proximity to work location and available flow. Adequacy of flow will be confirmed by water operations staff. Typically a fire hydrant or wharf head.
2. A dedicated meter and backflow will be set at the source location prior to any source connections to the water main being tested. The District will set the meter and the contractor will set and test an RP type backflow device that is the same size as the meter, or larger than the meter. This source will only be used for water main testing and no construction purposes for the duration of water main testing.
3. A 2.5" construction meter is only suitable for up to 12" diameter water main. Larger pipe will require at least a 4" meter/backflow.
4. Clean water hose will be provided by the contractor to convey water from the water source to the water main. This hose should be at least 2.5" in diameter, NSF 61 approved for potable water use (cloth fire hose is not acceptable), and the hose should be disinfected and flushed. Care should be taken to ensure the backflow assembly is clean prior to introducing water to the new main.
5. The main being tested should not be connected hydraulically to the existing District water system except for the backflow protected source. Physical separations or test plates must be used at all future tie-in points. The presence of a physical separation or test plate will be confirmed by the inspector. Testing against a closed valve is not acceptable.
6. Sample points will be selected by the inspector. The same sample points should be used for chlorine disinfection testing as well as bacteriological samples. Sets of samples shall be collected every 1,200 ft, plus one set from the end of the line, and at least one from each branch greater than one full pipe length. Samples should not be drawn from hydrants if possible.
7. A District provided form will be used by the inspector to document a diagram of the water main being tested, location and type of all designated sample points, date and field result of chlorine confirmation tests, and date and field results of all bacteriological samples taken.

Pressure Testing:

1. Pressure testing will be performed according to the most current EVMWD design standards. It is acceptable to combine pressure testing with chlorination if preferred by the contractor.

951.674.3146
Fax 951.674.9872
www.evmwd.com

31315 Chaney Street
P.O. Box 3000
Lake Elsinore, CA 92530

Chlorination:

1. Prior to chlorinated water being introduced into the new water main, the main will be thoroughly flushed to remove any sediments, construction debris, or stagnant water.
2. The continuous feed method of chlorination, as defined in AWWA C651-14, is the only acceptable method of chlorination. Tablet chlorination and slug chlorination are not acceptable.
3. Chlorine used for the continuous feed method can be liquid sodium hypochlorite that is NSF 60 approved for use in potable water, or gas chlorine using a vacuum operated chlorinator.
4. Chlorine will be introduced downstream of the RP backflow device. This could be the #4 test port on the backflow.
5. The water main will be filled with chlorinated water dosed at 25-150 mg/L of free chlorine residual. Care shall be taken to push the water to all dead ends of the new main and through all services.
6. The inspector will confirm that 25-150 mg/L of free chlorine is present at all designated sample points on the main. This will be accomplished using a Hach high chlorine titration kit.
7. The District inspector will witness the contractor operate all isolation valves on the water main segment being tested. All valves will be closed then completely reopened. Valves will remain completely open for the remainder of the test.
8. The water main will be isolated with static pressure until the following day. The source hose should stay connected if possible.
9. At 24 hours after the chlorine dosed and tested, the inspector will test each designated sample point to ensure the water main has at least 10 mg/L free chlorine residual at all points.
10. If 10 mg/L is present at all designated points, the chlorine can be flushed to commence bacteriological testing. If 10 mg/L is not present at all designated points, the water main must be chlorinated again.

Bacteriological Testing:

EVMWD's Regional Laboratory will analyze all new water main samples. The District inspector will deliver all samples to the Lab with accompanying completed chain-of-custody (COC) forms containing project and sample point IDs. Analyses for samples received at the Laboratory by 3pm will be started on the same day. Laboratory staff must be notified of any sample deliveries projected after 3pm, at the time of pick-up of sample bottles and COC's. EVMWD WQ Lab must be notified of sampling needs via e-mailed to waterquality@evmwd.net, at least one day in advance if possible, using the attached Lab order form.

1. Two consecutively passing sets of bacteriological samples are required for the water main to be accepted for tie-in to the EVMWD water system. Samples will be analyzed for coliform (presence/absence) and heterotrophic plate count (HPC). Passing samples shall be absent for coliform and have an HPC of less than 500 colony forming units (CFU) or less than 500 most probable number (MPN). If deemed applicable based on project size and conditions, it is

recommended that samples be tested for acceptable aesthetic quality (e.g., pH, alkalinity, specific conductance, turbidity).

2. During flushing, the District inspector will use a chlorine residual analyzer to confirm that all highly concentrated chlorine has been flushed from the main. The chlorine residual should be no more than 4 mg/L prior to bacteriological sampling.
3. The water main will be thoroughly flushed then shut off for a 16 hour period. During this period, the main should remain under static pressure with a valve on the source off (a backflow device valve). The inspector will read the construction meter. No water is allowed to pass through this meter prior to the arrival of the inspector for the bacteriological samples the following day.
4. After at least 16 hours have passed, the District inspector will confirm no water has passed through the meter. Bacteriological samples will be taken at each designated point. Two samples from each sample point will be taken a minimum of 15 minutes apart with the sample taps left running between samples, in accordance with "Bacteriological Tests, Option B". The source water will only be turned on to provide pressure for samples if needed. Flushing of the water main is not permitting on the day samples are being drawn.
5. The water source will be turned on after sampling is complete to provide continuous positive pressure on the tested main. The main must remain connected to the metered and backflow protected source and pressurized until all samples have been accepted by EVMWD and the tie-in work starts. The main will be depressurized only by District Water Operations staff on the date of the scheduled tie-in.
6. Once bacteriological samples have been taken, the contractor cannot depressurize or otherwise tamper with the tested water main. Any unauthorized depressurization or tampering witness by District staff will require bacteriological testing to start again. After sample results are sent to the inspector from the lab, proceed based on the following table:

Total Coliform Bacteria	E. Coli Bacteria	HPC (CFU or MPN)	Follow-up Actions
Absent (all samples)	-	< 500 (all samples)	Water Main can be accepted for tie-in
		=/> 500	Flush and repeat testing at elevated HPC sites. Repeat disinfection Optional.
PRESENT (1st Round </= 25% samples)	Absent	Regardless	Flush and repeat testing of all sample sites. Repeat disinfection Optional.
PRESENT (>25% samples)	Absent	Regardless	Flush and repeat testing of all sample sites. Repeat disinfection REQUIRED.
PRESENT (>1st Round)	Absent	Regardless	Flush and repeat testing of all sample sites. Repeat disinfection REQUIRED.
PRESENT	PRESENT (any sample)	Regardless	Flush and repeat testing of all sample sites. Repeat disinfection REQUIRED.

Tie-In:

1. The final tie-in of the tested water main will occur no sooner than five calendar days after the passing bacteriological results, and not later than 14 calendar days after passing bacteriological results. If job progress is dependent on an immediate shutdown and tie-in, District inspectors and Operations staff will work together to complete the work in less than five days.

Elsinore Valley Municipal Water District

New Water Main Testing Report

Location (address):	Tamarind Ridge & Elderberry Ridge	Pipe Material:	PVC C - 900
Project Name/No.:	Tr. 28214- 7 & 8 KB Home	Pipe Size:	8"
Inspector/Sampler:	Steve Simmons	Pipe Length:	approx. 1700'
Agency:	WESA / EVMWD	Water Source:	Alberhill 1801 zone Water System
Date started:	8 / 15 / 17	Source Meter #/size:	

Main Disinfection and Chlorine Testing

Sample Point #	Initial Cl2 Dose (mg/L)	Date & Time	24-Hr Cl2 Residual (mg/L)	Date & Time	
Normal Range	25-150 mg/L		>/= 10 mg/L		
1	100 +	8 / 11/ 17	60	8/14/17	8:55 am
2	100+	8 / 11 / 17	60	8/14/17	8:40 am
3	100+	8 / 11 / 17	300	8/14/17	9:00 am
4					
5					
6					
7					
8					
9					
10					
11					
12					

Bacteriological Testing (attached sampling Map or Shetch)

Sampling Date: 8 / 15 / 17

Sample Point #	Turbidity	pH	1st Sample set Cl2 Residuals (mg/L)	Time	2nd Sample set Cl2 Residuals (mg/L)		Time
Normal Range	< 1 NTU	7-8.5	< 4 mg/L		< 4 mg/L		
1			1.61	9:25 am	2nd	1.90	9:40 am
2			1.71	10:06 am	2nd	1.55	10 20 am
3			0.35	10:40 am	2nd	1.70	10 55 am
4							
5							
6							
7							
8							
9							
10							
11							
12							

☐ Test Plate ☐ Photos attached
☐ Separation ☐ Lab Results attached

Inspector Initials: S.S.

Proposed Tie-In Date: to be Determined
(No Later than 14 Calendar from Bacti Sampling Dt.)

* Attach sampling map or use page 2

Sketch of Water Main: (Include street names, sources, sample point ID, and points-of-connection to EVMWD distribution system.)

APPENDIX "J"

FORM 1

SCHEDULE OF VALUES

MAIDEN LANE WATERLINE RELOCATION

FORM 1

SCHEDULE OF VALUES FOR MAIDEN LANE WATERLINE RELOCATION

ITEM OF WORK	UNIT	QUANTITY	UNIT COST	TOTAL
Clearing, Grubbing, General Earthwork, Grading, Miscellaneous Removals, and Restoration	1	EA		
12" DIP CL 350 Water Main	630	LF		
12" RW Gate Valve	1	EA		
Fire Hydrant (6") Super	2	EA		
1" Water Service	6	EA		
12"x12"x6" Flanged Tee	2	EA		
12" 45° Bend	2	EA		
12" Flexible Pipe Transition Coupling, Epoxy Coating, Stainless Steel Hardware	1	EA		
12" Flange x Mechanical Joint Adapter	1	EA		
Remove & legally dispose of existing 1" steel	630	LF		
Remove & Waste (12" & 8")	630	LF		

TOTAL FOR MAIDEN LANE WATERLINE RELOCATION _____

APPENDIX "K"

FORM 2

SCHEDULE OF VALUES

EVMWD WATERLINE RELOCATIONS

FORM 2

SCHEDULE OF VALUES FOR EVMWD WATERLINE RELOCATIONS

ITEM OF WORK	UNIT	QUANTITY	UNIT COST	TOTAL
Clearing, Grubbing, General Earthwork, Grading, Miscellaneous Removals, and Restoration	1	EA		
8" PVC Water Main	100	LF		
1" Water Service	3	EA		
8" 45° Bend	8	EA		
4" x 8" Reducer	2	EA		
8" Flexible Pipe Transition Coupling, Epoxy Coating, Stainless Steel Hardware	2	EA		
4" Flexible Pipe Transition Coupling, Epoxy Coating, Stainless Steel Hardware	2	EA		
8" Flange x Mechanical Joint Adapter	2	EA		
Remove & Waste (4" & 8")	100	LF		

TOTAL FOR OTHER WATERLINE RELOCATIONS _____

RIVERSIDE COUNTY FLOOD CONTROL AND WATER CONSERVATION DISTRICT

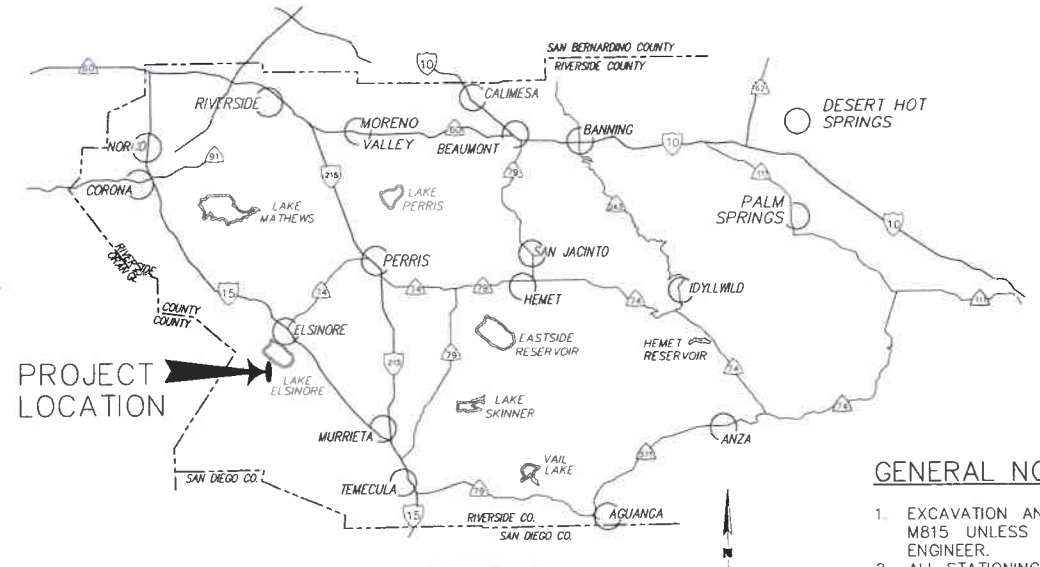

VICINITY MAP
NTS

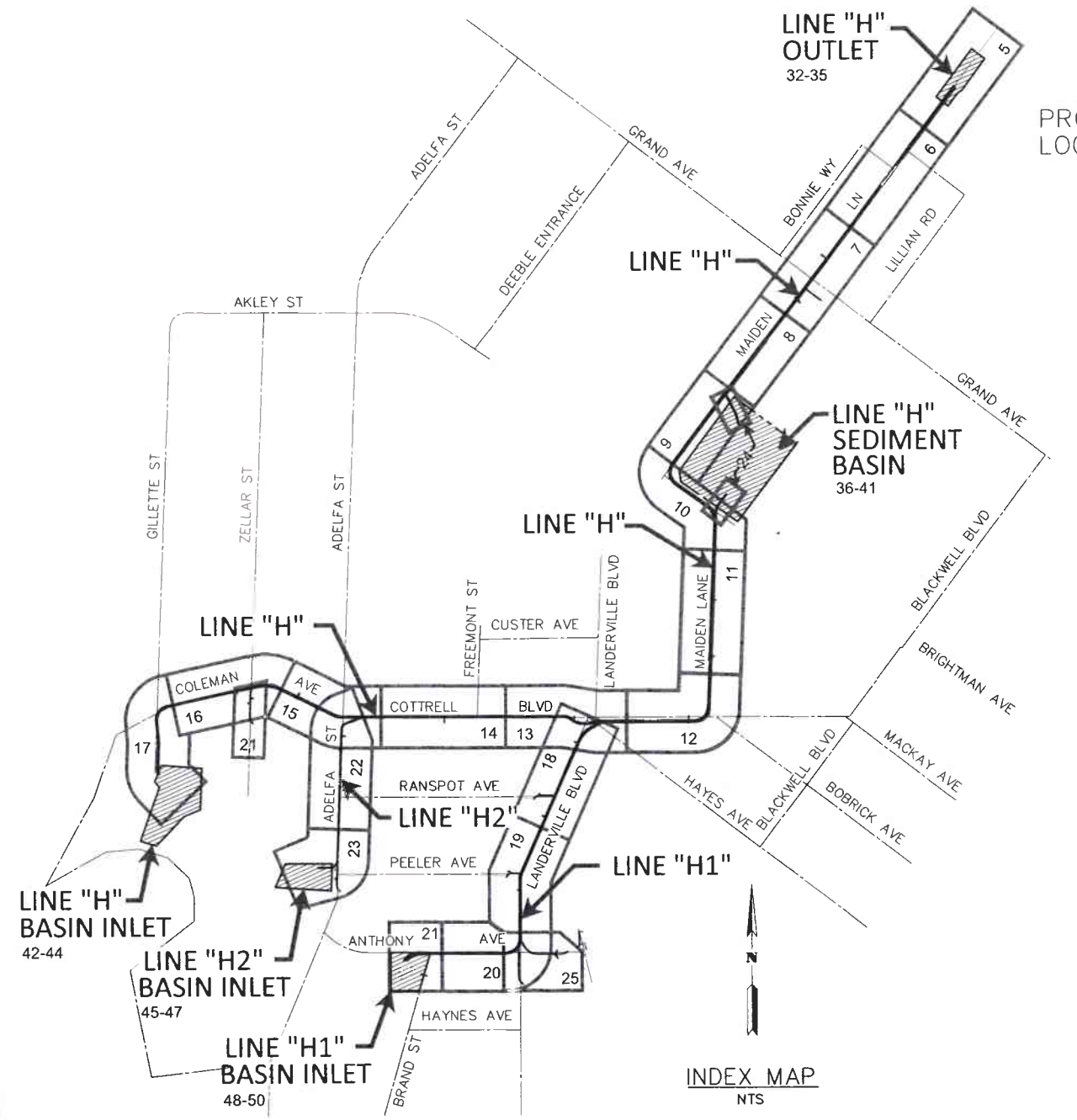

INDEX MAP
NTS

INDEX

LEGEND

- B–X = SOIL BORING LOCATION
- PHX = POTHOLE LOCATION MARCH 2018
- PHX = MARKED FOR POTHOLE, NOTHING FOUND
- PHX = POTHOLE LOCATION JULY 2018
- PHX = MARKED FOR POTHOLE, NOTHING FOUND
- MX = POTHOLE LOCATION JUNE 2020
- CP–6 / 27 = CONNECTOR PIPE NUMBER / REFERENCE SHEET NUMBER

BASIS OF BEARINGS:
THE BEARINGS SHOWN HEREON ARE BASED ON THE BEARING BETWEEN CSRC CORS "BILL" AND CSRC CORS "ECFS" BEING NORTH 76°00'33.57" WEST PER RECORDS ON FILE WITH THE CSRC.

GENERAL NOTES:

1. EXCAVATION AND BACKFILL PAYLINES ARE SHOWN PER RCFC&WCD STD. DWG. NO. M815 UNLESS SHOWN OTHERWISE ON THESE PLANS OR AS DIRECTED BY THE ENGINEER.
2. ALL STATIONING REFERS TO CENTERLINE OF CONSTRUCTION.
3. ALL CHANNEL/STORM DRAIN REFERENCES AND CROSS SECTIONS ARE TAKEN LOOKING DOWNSTREAM.
4. TOPOGRAPHY BY DIGITAL PHOTOGRAMMETRIC METHODS. AERIAL PHOTOGRAPHS TAKEN AT AN ALTITUDE NOT TO EXCEED A FLYING HEIGHT TO CONTOUR INTERVAL RATIO OF 1800. PHOTOGRAPHY DATED 02/06/2013.
5. THE VERTICAL DATUM IS DERIVED FROM NAVD 88 (COH 88). THE HORIZONTAL DATUM IS DERIVED FROM NAD83(2007) Epoch 2011.00, AND CALIFORNIA STATE PLANE, ZONE 6.
6. STANDARD DRAWINGS CALLED FOR ON THE PLAN & PROFILE SHALL CONFORM TO RCFC&WCD STANDARD DRAWINGS, UNLESS NOTED OTHERWISE.
7. ELEVATIONS AND LOCATIONS OF UTILITIES WERE OBTAINED FROM AVAILABLE INFORMATION AND ARE SHOWN APPROXIMATELY ON THESE PLANS. 48 HOURS BEFORE EXCAVATION CALL UNDERGROUND SERVICE ALERT AT 1–800–227–2600. ALL UTILITIES SHALL BE PROTECTED IN PLACE EXCEPT AS NOTED ON PLANS AND SPECIFICATIONS.
8. THE CONTRACTOR IS REQUIRED TO CONTACT ALL UTILITY AGENCIES REGARDING TEMPORARY SUPPORT AND SHORING REQUIREMENTS FOR THE VARIOUS UTILITY LINES SHOWN ON THESE PLANS.
9. ALL OPENINGS RESULTING FROM CUTTING OR PARTIAL REMOVAL OF EXIST. CULVERTS, PIPES, OR SIMILAR STRUCTURES TO BE ABANDONED, SHALL BE SEALED AT BOTH ENDS WITH 6" MINIMUM CLASS B CONCRETE
10. UNLESS OTHERWISE SPECIFIED, MINIMUM STREET RECONSTRUCTION SHALL BE 3" TYPE "A" HOT MIX ASPHALT OVER 6" CLASS 2 AGGREGATE BASE OR AS SPECIFIED BY THE ENGINEER
11. ALL RECONSTRUCTION, RESURFACING, PAVEMENT DELINEATION, CURBS, SIDEWALKS, AND OTHER IMPROVEMENTS ARE TO BE CONSTRUCTED IN KIND AT THE SAME LOCATIONS AND ELEVATIONS AS THE EXISTING IMPROVEMENTS, UNLESS OTHERWISE NOTED.
12. ◆ INDICATES APPROXIMATE SOIL BORING LOCATION PER SOILS REPORT DATED 03/09/2018, BY GEO TEK, INC.
13. ◪ INDICATES POTHOLE LOCATION PER SUBSURFACE UTILITY REPORT DATED 03/13/2018, BY UNDERGROUND SOLUTIONS, INC.
    ◆ INDICATES POTHOLE LOCATION PER SUBSURFACE UTILITY REPORT DATED 07/19/2018, BY UNDERGROUND SOLUTIONS, INC.
    ◪ INDICATES POTHOLE LOCATION PER SUBSURFACE UTILITY REPORT DATED 06/8/2020, BY UNDERGROUND SOLUTIONS, INC.
14. ⊡ OR ◈ INDICATES MARKED FOR POTHOLE, NOTHING FOUND.
15. PIPE CONNECTED TO THE MAINLINE PIPE OR LATERAL SHALL CONFORM TO JUNCTION STRUCTURE JS NO. 4 PER RCFC&WCD STANDARD DWG NO JS229, A=90°, UNLESS OTHERWISE NOTED.
16. [UTILITY] INDICATES THE PLOTTED UTILITY IN BRACKETS MAY BE AERIAL IF NOT FOUND UNDERGROUND.
17. <UTILITY> INDICATES THE PLOTTED UTILITY IN BRACKETS WAS FOUND POTHOLED IN A DIFFERENT LOCATION THAN WHERE IT WAS PLOTTED OR THE PLOTTED UTILITY MAY STILL BE IN THIS LOCATION. THE UTILITY NEEDS TO BE VERIFIED THAT IT WAS ABANDONED.
18. THE CONCRETE COATING ON THE INSIDE OF ALL REINFORCED CONCRETE PIPES MUST BE INCREASED TO A MINIMUM OF 1–1/2 INCHES OVER THE REINFORCING AND INCREASED TO A MINIMUM OF 3–1/2 INCHES OVER REINFORCING FOR BOX CULVERT, WHEN DESIGN VELOCITIES EXCEED 20fps. THE CONCRETE DESIGN STRENGTH IN THE REACHES SHALL BE F'c=6,000 PSI FOR VELOCITIES EXCEEDING 20.
19. ACCESS FOR THE WORK IS ONLY AUTHORIZED WITHIN THE IDENTIFIED PUBLIC ROAD RIGHTS OF WAY, EASEMENTS, AND TEMPORARY CONSTRUCTION EASEMENTS (TCE) SHOWN. NO IMPACTS OR ACCESS IS AUTHORIZED OUTSIDE THESE LIMITS.

CONSTRUCTION DRAWING SET DATED 22 JUNE, 2021

K&A Engineering, Inc.
ENGINEERING LAND PLANNING SURVEYING
357 N. SHERIDAN STREET
SUITE 117
CORONA, CALIFORNIA 92880
TEL (951) 279-1800
FAX (951) 279-4380

REGISTERED PROFESSIONAL ENGINEER DONALD W. BERST No 28949 CIVIL STATE OF CALIFORNIA

Donald Berst 8/16/2021
ENGINEER R.C.E. 28949 DATE

COUNTY FILE No. 970–B
COUNTY OF RIVERSIDE
TRANSPORTATION DEPARTMENT
RECMD COUNTY OVERSIGHT ENGINEER 8/11/21
APPROVES AS TO COMPLIANCE WITH APPLICABLE COUNTY STANDARDS AND PRACTICES.
REGISTRATION # 76450 DATE SIGNED

Don't Dig...Until You Call U.S.A. Toll Free
DIAL 811
for the location of buried utility lines.
Don't disrupt vital services.
TWO WORKING DAYS BEFORE YOU DIG

BENCH MARK
NAD83 Epoch 2011, CCS83, ZONE 6–
NAVD88(COH88)
RCFC B.M. Z 15502
SET MAG NAIL W/ RCFC WCD TAG FLUSH
E 6,226,565.52 N 2,177,350.50
ELEV: 1,401.46 SURVEY DATE: 02/2013

REF	DESCRIPTION	APPR	DATE
1	REVISIONS TO SHEETS 36 AND 38. SHEET 52 REPLACED.	E.A.	10/13/21

RIVERSIDE COUNTY FLOOD CONTROL AND WATER CONSERVATION DISTRICT
DESIGNED BY: K&A ENGINEERING
DRAWN BY: ADA
DATE DRAWN: JUNE 2021
P.B. NUMBER: 226078
RECOMMENDED FOR APPROVAL BY: CHIEF OF DESIGN & CONSTRUCTION DATE 8/4/2021
APPROVED BY: GENERAL MANAGER – CHIEF ENGINEER DATE 8/4/2021

LAKELAND VILLAGE MDP
LINES H, H1 & H2
STORM DRAIN
TITLE SHEET

PROJECT NO. 3–0–00020
DRAWING NO. 3–0207
SHEET NO. 1 OF 65

Drawing: R:\234638\Final\Storm Drain\838 - PLN - SD - LAKELAND - 001.dwg Layout: 1 TITLE SHEET Saved: 8/16/2021 2:05 PM Plotted: 8/16/2021 2:05 PM By: Patrick Brown

CONSTRUCTION NOTES

1. CONSTRUCT 9'WX5'H RCB PER CALTRANS STD. D80 (USE S=10' FOR CONCRETE THICKNESS & REBAR)
2. CONSTRUCT 102" RCP
3. CONSTRUCT 90" RCP
4. CONSTRUCT 72" RCP
5. CONSTRUCT 66" RCP
6. CONSTRUCT 48" RCP
7. CONSTRUCT 42" RCP
8. CONSTRUCT 78" RCP
9. CONSTRUCT 30" RCP
10. CONSTRUCT 24" RCP
11. CONSTRUCT 18" RCP
12. INSTALL PRECAST 5'WX8'H RCB PER CALTRANS STD. D83A & D83B (USE S=8' & H=8' FOR CONCRETE THICKNESS & REBAR)
13. CONSTRUCT COBINATION INLET CATCH BASIN NO.2 PER RCTD STD. NO. 302 WITH GUTTER DEPRESSION FOR GRATED OPENING CATCH BASIN PER RCTD STD. NO. 312, CASE A
14. INSTALL VELOCITY CONTROL RING PRECAST RCP SECTION PER SPPWC STD. PLAN 383-2 (D=72", H=6")
15. INSTALL VELOCITY CONTROL RING PRECAST RCP SECTION PER SPPWC STD. PLAN 383-2 (D=72", H=4.5")
16. CONSTRUCT CATCH BASIN NO.1 PER RCFC&WCD STD. CB100
17. CONSTRUCT LOCAL DEPRESSION NO.2 PER RCFC&WCD STD. LD201
18. CONSTRUCT CATCH BASIN PER RCTD STD. NO. 300 & PER DETAIL ON SHEET 3
19. CONSTRUCT GUTTER DEPRESSION PER RCTD STD. NO. 311
20. CONSTRUCT DRAINAGE INLET TYPE "G6" PER CALTRANS STD. D73B WITH TYPE "18-10" BICYCLE & PEDESTRIAN PROOF GRATE PER CALTRANS STD. D77B
21. CONSTRUCT STANDARD PRESSURE MANHOLE SHAFT PER RCFC&WCD STD. MH258 WITH FRAME & COVER PER RCFC&WCD STD. MH256
22. CONSTRUCT JS NO.3 PER RCFC&WCD STD. JS228
23. CONSTRUCT JS NO.2 PER RCFC&WCD STD. JS227
24. CONSTRUCT JS NO.4 PER RCFC&WCD STD. JS229
25. CONSTRUCT MANHOLE NO.1 PER RCFC&WCD STD. MH251
26. CONSTRUCT MANHOLE NO.2 PER RCFC&WCD STD. MH252
27. CONSTRUCT MANHOLE NO.4 PER RCFC&WCD STD. MH254
28. CONSTRUCT MANHOLE SHAFT SAFETY LEDGE PER RCFC&WCD STD. MH261
29. CONSTRUCT BIFURCATION STRUCTURE PER DETAIL ON SHEET 39
30. CONSTRUCT TS NO.1 PER RCFC&WCD STD. TS301
31. CONSTRUCT TS NO.3 PER RCFC&WCD STD. TS303
32. CONSTRUCT CONCRETE COLLAR PER RCFC&WCD STD. M803
33. CONSTRUCT CONCRETE BULKHEAD PER RCFC&WCD STD. M816
34. CONSTRUCT CONCRETE HEADWALL & WINGWALL TYPE "A" PER CALTRANS STD. D90, L=11.3', ANGLE=25.6°
35. PROTECT IN PLACE
36. EXISTING 2" GAS LINE (PROTECT IN PLACE)
37. FIBER OPTIC TO BE RELOCATED BY FRONTIER PRIOR TO CONSTRUCTION
38. ELECTRICAL TO BE RELOCATED BY EDISON PRIOR TO CONSTRUCTION
39. CONSTRUCT 96" RCP
40. RELOCATE WATER (SIZE PER PLAN) PER WATER IMPROVEMENT PLAN ON SHEETS W1-W5
41. VERIFY PLOTTED UTILITY IS IN THIS LOCATION, IF FOUND, VERIFY IF ABANDONED & REMOVE AS NEEDED
42. INSTALL 6' HIGH CHAIN LINK FENCE PER RCFC&WCD STD. M801
43. INSTALL DOUBLE DRIVE GATE PER RCFC&WCD STD. M801, W PER PLAN
44. INSTALL CABLE RAILING PER CALTRANS STD. B11-47
45. REMOVE & RELOCATE INTERFERING MAILBOX
46. REMOVE & RELOCATE INTERFERING WATER METER PER SHEETS W1-W5 OF WATER IMPROVEMENT PLANS
47. FENCE TO BE SALVAGED OR REPLACED IN KIND (SEE NOTE ON PLAN)
48. STRUCTURE TO BE SALVAGED OR REPLACED IN KIND
49. CONSTRUCT MANHOLE NO.3 PER RCFC&WCD STD. MH253
50. INSTALL 6'WX7'H PRECAST RCB PER CALTRANS STD. D83A & D83B (USE S=7' & H=7' FOR CONCRETE THICKNESS & REBAR)
51. TRIM OR REMOVE INTERFERING PORTION OF TREE WITHIN RIGHT-OF-WAY
52. REMOVE INTERFERING PORTIONS OF VEGETATION WITHIN RIGHT-OF-WAY
53. REMOVE, LEGALLY DISPOSE OF & RECONSTRUCT INTERFERING PORTIONS OF DRIVEWAY PER PAVING PLAN
54. CONSTRUCT 6'X6'X6" CLASS B CONCRETE SLAB AROUND MANHOLE PER DETAIL ON SHEET 9
55. CONSTRUCT SPECIAL CONNECTION TO CATCH BASIN PER RCFC&WCD STD. CB109
56. REMOVE & RELOCATE GARDEN FEATURES AS REQUIRED FOR CONSTRUCTION
57. CONSTRUCT 9'Wx5.5'H RCB PER CALTRANS STD. D80 (USE S=10' & H=6' FOR CONCRETE THICKNESS & REBAR)
58. CONSTRUCT 10'Wx6'H RCB PER CALTRANS STD. D80
59. CONSTRUCT 5'Wx3.5'H RCB PER CALTRANS STD. D80 (USE H=4' FOR CONCRETE THICKNESS & REBAR)
60. CONSTRUCT JS NO.8 PER RCFC&WCD STD. JS233
61. REMOVE & LEGALLY DISPOSE OF INTERFERING PORTIONS OF EXISTING FENCE
62. CONSTRUCT DRAINAGE INLET TYPE "GT1" PER CALTRANS STD. D73D WITH TYPE "18-10" BICYCLE & PEDESTRIAN PROOF GRATES PER CALTRANS STD. D77B, USE MODIFIED ROLLED CURB PER CALTRANS STD. A87A WITH 1.5" HIGH CURB
63. CONSTRUCT MANHOLE SHAFT 36" WITHOUT REDUCER PER SPPWC STD. PLAN 326-2
64. CONSTRUCT MODIFIED CATCH BASIN NO.1 PER RCFC&WCD STD. CB100 & LOCAL DEPRESSION NO.2 PER RCFC&WCD STD. LD201 & DETAIL ON SHEET 21
65. CONSTRUCT CONCRETE DROP INLET PER RCFC&WCD STD. CB110
66. REMOVE & RELOCATE FIRE HYDRANT
67. FENCE TO BE SALVAGED OR REPLACED IN KIND BEHIND RIGHT-OF-WAY
68. CONSTRUCT 6'Wx7'H RCB PER CALTRANS STD. D80 (USE S=7' & H=7' FOR CONCRETE THICKNESS & REBAR) CONCRETE COVER 3-1/2" OVER REBAR
69. EXISTING GAS LINE TO BE RELOCATED BY OTHERS PRIOR TO CONSTRUCTION

INLET AND OUTLET STRUCTURES CONSTRUCTION NOTES

70. CONSTRUCT ENERGY DISSIPATOR - IMPACT BASIN WITH VERTICAL BAFFLE WALL PER SPPWC STD. PLAN 384-3 (W=28', STRENGTH DESIGN) DETAILS ON SHEET 33
71. CONSTRUCT 4' CUTOFF WALL WITH SLAB TIE-IN PER DETAIL ON SHEET 51
71A. CONSTRUCT 6' CUTOFF WALL WITH SLAB TIE-IN PER DETAIL ON SHEET 51
72. CONSTRUCT 6' CUTOFF WALL PER DETAIL ON SHEET 51
72A. CONSTRUCT 4' CUTOFF WALL PER DETAIL ON SHEET 51
73. CONSTRUCT RETAINING WALL TYPE "6A" (CASE1) PER CALTRANS STD. B3-7A
74. PLACE 36" THICK CLASS V (1/4 TON) ROCK SLOPE PROTECTION OVER 6" FILTER MATERIAL OVER FILTER FABRIC PER DETAIL ON SHEET 51
75. PLACE 24" THICK CONCRETED CLASS III (150LBS) ROCK SLOPE PROTECTION OVER 6" FILTER MATERIAL OVER FILTER FABRIC PER DETAIL ON SHEET 51
76. PLACE 48" THICK CLASS VII (1/2 TON) ROCK SLOPE PROTECTION OVER 6" FILTER MATERIAL OVER FILTER FABRIC PER DETAIL ON SHEET 51
77. CONSTRUCT 6" CONCRETE ACCESS ROAD WITH #4@12" O.C. EACH WAY 2" CLEAR ON TOP
78. CONSTRUCT 6" CONCRETE SLOPE PAVING WITH #4@12" O.C. EACH WAY 2" CLEAR ON TOP PER DETAIL ON SHEET 36
79. GRADE LOADING AREA AS SHOWN WITHIN GRADING LIMITS OR AS DIRECTED BY ENGINEER. PLACE 3" CRUSHED ROCK OVER COMPACTED NATIVE
80. INSTALL INCLINED TRASH RACK PER SPPWC STD. PLAN 361-2, WITH 2 - 3' WIDE REMOVEABLE SECTIONS (L=10')
81. CONSTRUCT BOX CULVERT WINGWALL TYPE "A" PER CALTRANS STD. D84
82. CONSTRUCT LOW FLOW GRAVEL TRENCH 4'WIDE x 2'DEEP PER DETAIL ON SHEET 38
83. GRADE SEDIMENT BASIN PER SHEETS 36-38; GRADE AREA AS SHOWN WITHIN GRADING LIMITS OR AS DIRECTED BY THE ENGINEER
84. GRADE MAINTENANCE ROAD; WITHIN LIMITS AND TO GRADE AS SHOWN OR AS DIRECTED BY THE ENGINEER, PAVE WITH 3" CRUSHED ROCK OVER COMPACTED NATIVE
85. GRADE MAIDEN LANE AS SHOWN WITHIN LIMITS OR AS DIRECTED BY ENGINEER
86. CONSTRUCT PARAPET WALL PER DETAILS ON SHEET 51
87. CONSTRUCT TYPE "D" CURB PER RCTD STD. NO. 204
88. CONSTRUCT BASIN OUTLET STRUCTURE PER DETAILS ON SHEETS 40 & 41
89. GRADE GILLETTE AVENUE PER SHEET 17; GRADE AREA AS SHOWN WITHIN GRADING LIMITS OR AS DIRECTED BY THE ENGINEER
90. CONSTRUCT RETAINING WALL TYPE "1A" (CASE 1) PER CALTRANS STD. B3-3A
91. CONSTRUCT 6" CONCRETE APRON WITH #4@12" O.C. EACH WAY 2" CLEAR ON TOP
92. GRADE LINE H INLET STRUCTURE AREA PER SHEETS 42-44; GRADE AREA AS SHOWN WITHIN GRADING LIMITS OR AS DIRECTED BY THE ENGINEER
93. GRADE LINE H1 INLET STRUCTURE AREA PER SHEETS 45-47; GRADE AREA AS SHOWN WITHIN GRADING LIMITS OR AS DIRECTED BY THE ENGINEER
94. GRADE LINE H2 INLET STRUCTURE AREA PER SHEETS 48-50; GRADE AREA AS SHOWN WITHIN GRADING LIMITS OR AS DIRECTED BY THE ENGINEER
95. CONSTRUCT FLOODWALL PER DETAIL ON SHEET 42

PAVEMENT NOTES

100. CONSTRUCT TRENCH PER RCFC&WCD STD. M815
101. GRIND EXISTING ASPHALT CONCRETE TO DEPTH SHOWN
102. PAVE WITH TYPE "A" HOT MIX ASPHALT
103. CONSTRUCT 3" TYPE "A" HMA OVER 6" CLASS 2 AGGREGATE BASE
104. CONSTRUCT MIN 3" AGGREGATE BASE OVER NATIVE
105. CONSTRUCT CONCRETE CROSS GUTTER PER RCTD STD. NO. 209
106. CONSTRUCT CURB & DIKE TRANSITIONS PER DETAILS ON SHEET 65
107. CONSTRUCT 6" AC DIKE PER RCTD STD. NO. 212
108. CONSTRUCT 8" AC DIKE PER RCTD STD. NO. 212
109. CONSTRUCT TYPE "E" CURB PER CALTRANS STD. A87A
110. CONSTRUCT MOUNTABLE TYPE "E" HOT MIX ASPHALT DIKE PER CALTRANS STD. A87B
111. CONSTRUCT TYPE "A-8" CURB WITH REVERSED GUTTER PER RCTD STD. NO. 201 & DETAIL ON SHEET 65
112. CONCRETE SIDEWALK TO BE POURED MONOLITHICALLY WITH TOP OF CATCH BASIN PER RCTD STD. NO. 300
113. REMOVE, LEGALLY DISPOSE OF & REPLACE IN KIND INTERFERING PORTION OF EXISTING CONCRETE AS REQUIRED FOR CONSTRUCTION
114. REMOVE, LEGALLY DISPOSE OF & REPLACE IN KIND
115. REMOVE & LEGALLY DISPOSE OF EXISTING CONCRETE CURB, GUTTER, SIDEWALK, DRIVEWAY & MISC. CONCRETE, AS REQUIRED FOR CONSTRUCTION
116. REMOVE & LEGALLY DISPOSE OF EXISTING AC PAVING, AC BERM & AC DIKE AS REQUIRED FOR CONSTRUCTION
117. JOIN & MATCH EXISTING AC PAVING PER DETAIL ON SHEET 52
118. JOIN & MATCH EXISTING DRIVEWAY
119. JOIN & MATCH EXISTING WALKWAY
120. EXISTING WATER VALVE - ADJUST TO GRADE
121. EXISTING SEWER MANHOLE - ADJUST TO GRADE
122. PROTECT & TEMPORARILY SUPPORT IN PLACE HISTORIC LIGHT POLE
123. INSTALL DELINEATOR PER CALTRANS STD. A73C CLASS 1 "TYPE F"
124. REMOVE & REPLACE BARRICADE PER RCTD STD. NO. 810
125. CONSTRUCT TRANSITION TO MATCH & JOIN EXISTING BERM, CURB OR EXISTING SURFACE PER DETAILS ON SHEET 65
126. REMOVE & RELOCATE FIRE HYDRANT
127. REMOVE & RELOCATE EXISTING WATER VALVE
128. CONSTRUCT TYPE "A-8" CURB & GUTTER PER RCTD STD. NO. 201
129. CONSTRUCT TRANSITION FROM TYPE "A-8" CURB & GUTTER TO TYPE "A-8" CURB WITH REVERSED GUTTER PER DETAIL ON SHEET 65
130. FINISHED SURFACE TO MATCH EXISTING GROUND OR AS DIRECTED BY ENGINEER
131. SAWCUT EXISTING ASPHALT PAVEMENT
132. SAWCUT EXISTING CONCRETE
133. CONSTRUCT CONCRETE DRIVEWAY
134. CONSTRUCT TYPE "D" AC DIKE PER CALTRANS STD. A87B

CONSTRUCTION DRAWING SET DATED 22 JUNE, 2021

K&A Engineering, Inc.
ENGINEERING
LAND PLANNING
SURVEYING
357 N. SHERIDAN STREET
SUITE 117
CORONA, CALIFORNIA 92880
TEL (951) 279-1800
FAX (951) 279-4380

REGISTERED PROFESSIONAL ENGINEER DONALD W. BERGH No. 28949 CIVIL STATE OF CALIFORNIA

Donald Bergh 8/16/2021
ENGINEER R.C.E 28949 DATE:

COUNTY FILE No. 970-B

COUNTY OF RIVERSIDE
TRANSPORTATION DEPARTMENT
RECMD COUNTY OVERSIGHT ENGINEER
Bergh 8/11/21
APPROVES AS TO COMPLIANCE WITH APPLICABLE COUNTY STANDARDS AND PRACTICES.
REGISTRATION # 76450 DATE SIGNED

Don't Dig...Until You Call U.S.A. Toll Free
DIAL 811
for the location of buried utility lines.
Don't disrupt vital services.
TWO WORKING DAYS BEFORE YOU DIG

BENCH MARK
NAD83 Epoch 2011, CCS83, ZONE 6-
NAVD88(COH88)
RCFC B.M. Z 15502
SET MAG NAIL W/ RCFC WCD TAG FLUSH
E 6,226,565.52 N 2,177,350.50
ELEV.: 1,401.46 SURVEY DATE: 02/2013

REF	DESCRIPTION	APPR	DATE
	REVISIONS		

RIVERSIDE COUNTY FLOOD CONTROL AND WATER CONSERVATION DISTRICT

DESIGNED BY: K&A ENGINEERING
DRAWN BY: ADA
DATE DRAWN: JUNE 2021
PB NUMBER: 226078

RECOMMENDED FOR APPROVAL BY: DATE 7-27-2021
APPROVED BY: DATE 8/4/2021

LAKELAND VILLAGE MDP LINES H, H1 & H2 STORM DRAIN

CONSTRUCTION NOTES

PROJECT NO. 3-0-00020
DRAWING NO. 3-0207
SHEET NO. 2 OF 65

R.C.F.C. & W.C.D. STANDARD DRAWINGS

CB 100	CATCH BASIN NO. 1
CB 103	CATCH BASIN – FRAME AND COVER (MANHOLE)
CB 109	SPECIAL CONNECTIONS TO CATCH BASIN
CB 110	CONCRETE DROP INLET
LD 201	LOCAL DEPRESSION NO. 2
JS 227	JUNCTION STRUCTURE No. 2
JS 228	JUNCTION STRUCTURE No. 3
JS 229	JUNCTION STRUCTURE No. 4
JS 233	JUNCTION STRUCTURE No. 8
MH 251	MANHOLE NO. 1
MH 252	MANHOLE NO. 2
MH 253	MANHOLE NO. 3 (BOX)
MH 254	MANHOLE NO. 4
MH 255	MANHOLE FRAME & COVER NON-ROCKING
MH 256	MANHOLE FRAME & COVER PRESSURE TYPE
MH 257	MANHOLE SHAFT FOR CAST PIPE
MH 258	STANDARD PRESSURE MANHOLE SHAFT
MH 259	STANDARD DROP STEP
MH 261	MANHOLE SHAFT SAFETY LEDGE
TS 301	TRANSITION STRUCTURE No. 1
TS 303	TRANSITION STRUCTURE No. 3
M 801	CHAIN LINK FENCE DETAILS
M 803	CONCRETE COLLAR FOR PIPE
M 808	REMODELING DETAILS – HOUSE CONNECTION SEWERS
M 814	ABBREVIATIONS AND SYMBOLS
M 815	BEDDING AND PAY LINES
M 816	CONCRETE BULKHEAD
M 819	MAXIMUM CHORD LENGTHS FOR CURVED SECTIONS

CALTRANS STANDARD PLANS (2018)

A3A	ABBREVIATIONS (SHEET 1 OF 3)
A3B	ABBREVIATIONS (SHEET 2 OF 3)
A3C	ABBREVIATIONS (SHEET 3 OF 3)
A87A	CURBS AND DRIVEWAYS
A87B	HOT MIX ASPHALT DIKES
B3-3A	RETAINING WALL TYPE 1A (CASE 1)
B3-7A	RETAINING WALL TYPE 6 (CASE 1)
B3-7C	RETAINING WALL TYPE 6 DETAILS
B11-47	CABLE RAILING
D73B	PRECAST DRAINAGE INLETS –TYPES G1, G2, G3, G4, G5 AND G6
D73D	PRECAST DRAINAGE INLETS –TYPES G1, G2, G3, G4, G5 AND G6
D77B	GRATE DETAILS NO. 1
D80	CAST IN PLACE REINFORCED CONCRETE SINGLE BOX CULVERT
D82	CAST IN PLACE REINFORCED CONCRETE BOX CULVERT MISC. DETAILS
D83A	PRECAST REINFORCED CONCRETE BOX CULVERT
D83B	PRECAST REINFORCED CONCRETE BOX CULVERT MISC. DETAILS
D84	BOX CULVERT WINGWALLS TYPES A, B AND C
D90	PIPE CULVERT HEADWALLS, ENDWALLS AND WINGWALLS –TYPES A, B, AND C
T3	TEMPORARILY RAILING TYPE K

STD. PLANS FOR PUBLIC WORKS CONSTRUCTION

326-2	MANHOLE SHAFT 36" WITHOUT REDUCER
361-2	TRASH RACK (INCLINED)
383-2	VELOCITY CONTROL RING PRECAST RCP SECTION
384-3	ENERGY DISSIPATOR
600-3	CHAIN LINK FENCE AND GATES
633-4	36" MANHOLE FRAME COVER COVER

UNDERGROUND SOLUTIONS

Underground Solutions, Inc.
1220 N. Andreasen Dr. Escondido, CA 92029
(760) 294-9449 • Fax (760) 294-9490 • www.usipothole.com

Pothole Summary Report

Customer	K & A Engineering, Inc
Project	Lakeland Village MDP Line H
Location	Lake Elsinore, CA
Date	March 12, 2018

MARCH 12, 2018 POTHOLE SUMMARY REPORT

PH#	UTILITY	TOP(FT)	BOTTOM(FT)	SIZE	TYPE	DISTANCE FROM CURB	DIRECTION	TOP OF PIPE ELEV
01	SWR	11.30	12.30	12"	PVC	11.00 FT S OF MH	N/S	1250.25
03	G	4.46	1.62	2"	PE	12.20 FT NW FROM EDGE OF ROAD	NE/SW	1300.15
04	W	2.82	3.30	6"	CONC	19.70 FT NW OF PROPERTY FENCE	NE/SW	1316.32
06	T	3.22	3.38	2"	DB	-3.50 FT	E/W	1372.86
08	W	2.86	3.34	6"	CONC	-5.00 FT	E/W	1372.88
08	UNK	3.80	4.12	4"	PVC	-5.60 FT	E/W	1373.93
09	W	3.83	4.83	12"	CTL	5.60 FT	E/W	1372.90
10	W	3.58	4.58	12"	DTL	6.40 FT	E/W	1380.40
11	G	3.16	3.32	2"	PE	9.20 FT N OF PROPERTY BRICK FENCE	E/W	1380.68
13	W	4.12	5.12	12"	CONC	5.90 FT	E/W	1399.33
14	W	4.72	5.40	8"	CONC	9.70 FT	NE/SW	1427.37
16	W	4.96	6.00	12"	CONC	15.00 FT	N/S	1427.02
17	W	4.20	5.30	12"	CONC	10.20 FT	E/W	1395.80
18	DRY HOLE	0.00	0.00		NA		UNKNOWN	–
19	G	3.46	3.62	2"	PE	6.70 FT S OF PROPRTY FENCE	E/W	1465.76

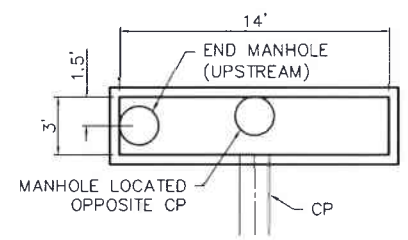

⑱ INSTALL TRASH CAPTURE DEVICE & TWO MANHOLES PER RCTD "DRAFT" STD 313

SCALE: 1"=5'

R.C.T.D. STANDARD DRAWINGS

200	TYPE A-6 CURB
201	TYPE A-8 CURB
204	TYPE "D" CURB
206	RESIDENTIAL DRIVEWAY WITH AC DIKE
209	CROSS GUTTER, LAYOUT AND SECTION
211	CURB TRANSITION
212	ASPHALT CONCRETE DIKES
300	CURB INLET CATCH BASIN
304	CURB SUPPORT DETAIL
306	ASPHALT CONCRETE OVERSIDE DRAIN
311	GUTTER DEPRESSION FOR COCB
810	BARRICADE
313	"DRAFT" TRASH CAPTURE DEVICE

LEGEND

- B-X = SOIL BORING LOCATION
- PHX = POTHOLE LOCATION MARCH 2018
- PHX = MARKED FOR POTHOLE, NOTHING FOUND
- PHX = POTHOLE LOCATION JULY 2018
- PHX = MARKED FOR POTHOLE, NOTHING FOUND
- MX = POTHOLE LOCATION JUNE 2020
- CP-6 / 27 = CONNECTOR PIPE NUMBER / REFERENCE SHEET NUMBER

UNDERGROUND SOLUTIONS

Underground Solutions, Inc.
1220 N. Andreasen Dr. Escondido, CA 92029
(760) 294-9449 • Fax (760) 294-9490 • www.usipothole.com

Pothole Summary Report

Customer	K & A Engineering, Inc
Project	Lakeland Village MDP Line H (July 2018)
Location	Lake Elsinore, CA
Date	July 18, 2018

JULY 18, 2018 POTHOLE SUMMARY REPORT

PH#	UTILITY	TOP(FT)	BOTTOM(FT)	SIZE	TYPE	DISTANCE FROM CURB	DIRECTION	TOP OF PIPE ELEV
01	SWR	10.57	11.65	12"	PVC	10.40 FT NW OF S/MH	NW/SE	1261.01
02	W	3.60	4.18	6"	ACP	42.00 FT W OF ELEC POLE	NE/SW	1293.51
03	E	2.23	2.63	4"	PVC	5.90 FT SE	NE/SW	1298.99
07	G	3.21	3.41	2"	STL	7.30 FT N	E/W	1413.04
08	F/O	1.85	2.25	4"	PVC	1.30 FT N	E/W	1413.26
09	G	3.55	3.75	2"	STL	3.00 FT S	E/W	1440.04
10	G	3.28	3.48	2"	STL	2.40 FT S	E/W	1452.80
11	G	2.62	2.82	2"	STL	3.50 FT W	N/S	1451.34
12	W	1.58	1.78	2"	STL	17.00 FT S	N/S	1450.92
12	G	2.62	2.82	2"	STL	17.00 FT S	N/S	1450.70
13	W	4.13	5.22	12"	CONC	45.20 FT FROM TEL POLE	N/S	1432.69
15	G	3.00	3.27	2"	STL	33.20 FT FROM TEL POLE	N/S	1434.29
16	W	4.04	5.20	12"	UNK	16.20 FT E	SEE COMMENT	1472.18
17	DRY HOLE	0.00	0.00		N/A		UNKNOWN	–
18	W	6.39	6.94	6"	CONC	11.50 FT W FROM FH	E/W	1475.80
19	G	2.51	2.72	2"	STL	16.65 FT FROM TEL POLE	N/S	1472.48
20	DRY HOLE	0.00	0.00		N/A		UNKNOWN	–
21	T	3.36	3.56	2"	PVC	5.90 FT E	N/S	1407.56
21	T	3.57	3.95	4"	PVC	5.90 FT E	N/S	1407.58
22	W	2.12	2.52	4"	CONC	*ON CURB	N/S	1406.39
23	W	1.70	2.10	4"	CONC	20.70 FT N FROM STREET LIGHT	N/S	1426.58
24	G	3.63	3.83	2"	STL	0.40 FT N	E/W	1426.62
25	G	1.85	2.05	2"	STL	1.20 FT E	N/S	1431.89
27	G	2.82	3.02	2"	STL	1.00 FT N	E/W	1451.70
28	G	2.53	2.72	2"	UNK	41.20 FT S FROM STREET LIGHT	N/S	1454.74
29	W	3.10	3.30	2"	STL	4.00 FT N	E/W	1473.23
30	G	3.28	3.56	2"	PE	3.00 FT E	N/S	1477.22
34	F/O	3.10	3.30	2"	PVC	1.80 FT SE	NE/SW	1298.92
35	G	2.80	3.00	2"	STL	2.00 FT W	NE/SW	1406.85
36	G	3.60	3.80	2"	PE	2.00 FT S	E/W	1473.85
37	W	2.03	2.23	2"	STL	4.00 FT N	E/W	1426.43

UNDERGROUND SOLUTIONS

Underground Solutions, Inc.
1220 N. Andreasen Dr. Escondido, CA 92029
(760) 294-9449 • Fax (760) 294-9490 • www.usipothole.com

Pothole Summary Report

Customer	K & A Engineering, Inc.
Project	Lakeland Village MDP Line H - Maiden Ln.
Location	Lake Elsinore, CA
Date	June 08, 2020

JUNE 8, 2020 POTHOLE SUMMARY REPORT

PH#	UTILITY	TOP(FT)	BOTTOM(FT)	SIZE	TYPE	DISTANCE FROM CURB	DIRECTION	TOP OF PIPE ELEV
01	W	3.60	4.84	12"	DIP	10.70 FT W OF POWER POLE, 19.60 FT N OF W/VALVE, 22.00 FT OF BLOW-OFF VALVE	N/S	1370.58
02	G	2.96	3.16	2"	PE	28.50 FT NW OF POWER POLE, 34.10 FT N OF EDGE OF ASPHALT, 42.00 FT NW OF W/VALVE	N/S	1369.09
03	W	3.10	4.10	12"	DIP	55.10 FT SW OF POWER POLE, 11.80 FT SW OF WATER METER, 96.00 FT N OF EDGE OF ASPHALT	N/S	1360.48
04	G	2.74	2.94	2"	PE	39.10 FT SW OF POWER POLE, 22.20 FT NW OF WATER METER, 117.50 FT N OF EDGE OF ASPHALT	N/S	1358.87
05	W	3.50	4.50	12"	DIP	86.30 FT SW OF F/HYD. 22.10 FT SE OF WATER METER, 40.00 FT NW OF POWER POLE	N/S	1352.86
06	G	2.42	2.62	2"	PE	88.80 FT SW OF F/HYD, 13.30 SE OF W/METER, 14.00 FT SE OF W/VALVE	N/S	1354.38
07	G	2.88	3.08	2"	PE	17.60 FT SW OF F/HYD, 46.00 FT SE OF W/METER, 41.00 FT SW OF POWER POLE	N/S	1348.77
08	G	2.16	2.44	2"	PE	2.00 FT N OF G/VALVE, 15.30 FT E IF MAIL BOX, 28.00 FT NW OF POWER POLE	N/S	1345.24

CONSTRUCTION DRAWING SET DATED 22 JUNE, 2021

K&A ENGINEERING LAND PLANNING SURVEYING
Engineering, Inc.
357 N. SHERIDAN STREET
SUITE 117
CORONA, CALIFORNIA 92880
TEL (951) 279-1800
FAX (951) 279-4380

REGISTERED PROFESSIONAL ENGINEER DONALD W. BERGH No. 28949 CIVIL STATE OF CALIFORNIA

Donald Bergh 8/16/2021
ENGINEER R.C.E. 28949 DATE

COUNTY FILE No. 970-B

COUNTY OF RIVERSIDE
TRANSPORTATION DEPARTMENT

RECMD COUNTY OVERSIGHT ENGINEER 7/11/21
APPROVES AS TO COMPLIANCE WITH APPLICABLE COUNTY STANDARDS AND PRACTICES

REGISTRATION # 76450 DATE SIGNED

Don't Dig...Until You Call U.S.A. Toll Free
DIAL 811
for the location of buried utility lines.
Don't disrupt vital services.
TWO WORKING DAYS BEFORE YOU DIG

BENCH MARK
NAD83 Epoch 2011, CCS83, ZONE 6-
NAVD88(COH88)

RCFC B.M. Z 15502
SET MAG NAIL W/ RCFC WCD TAG FLUSH

E 6,226,565.52 N 2,177,350.50

ELEV: 1,401.46 SURVEY DATE: 02/2013

REF	DESCRIPTION	APPR.	DATE
	REVISIONS		

RIVERSIDE COUNTY FLOOD CONTROL AND WATER CONSERVATION DISTRICT

DESIGNED BY: K&A ENGINEERING
DRAWN BY: ADA
DATE DRAWN: JUNE 2021
P8 NUMBER: 226078

RECOMMENDED FOR APPROVAL BY: DATE: 7-27-2021
APPROVED BY: DATE: 8/4/2021

LAKELAND VILLAGE MDP
LINES H, H1 & H2
STORM DRAIN
STANDARD DRAWINGS LISTS & POTHOLE SUMMARY REPORT

PROJECT NO. 3-0-00020
DRAWING NO. 3-0207
SHEET NO. 3 OF 65

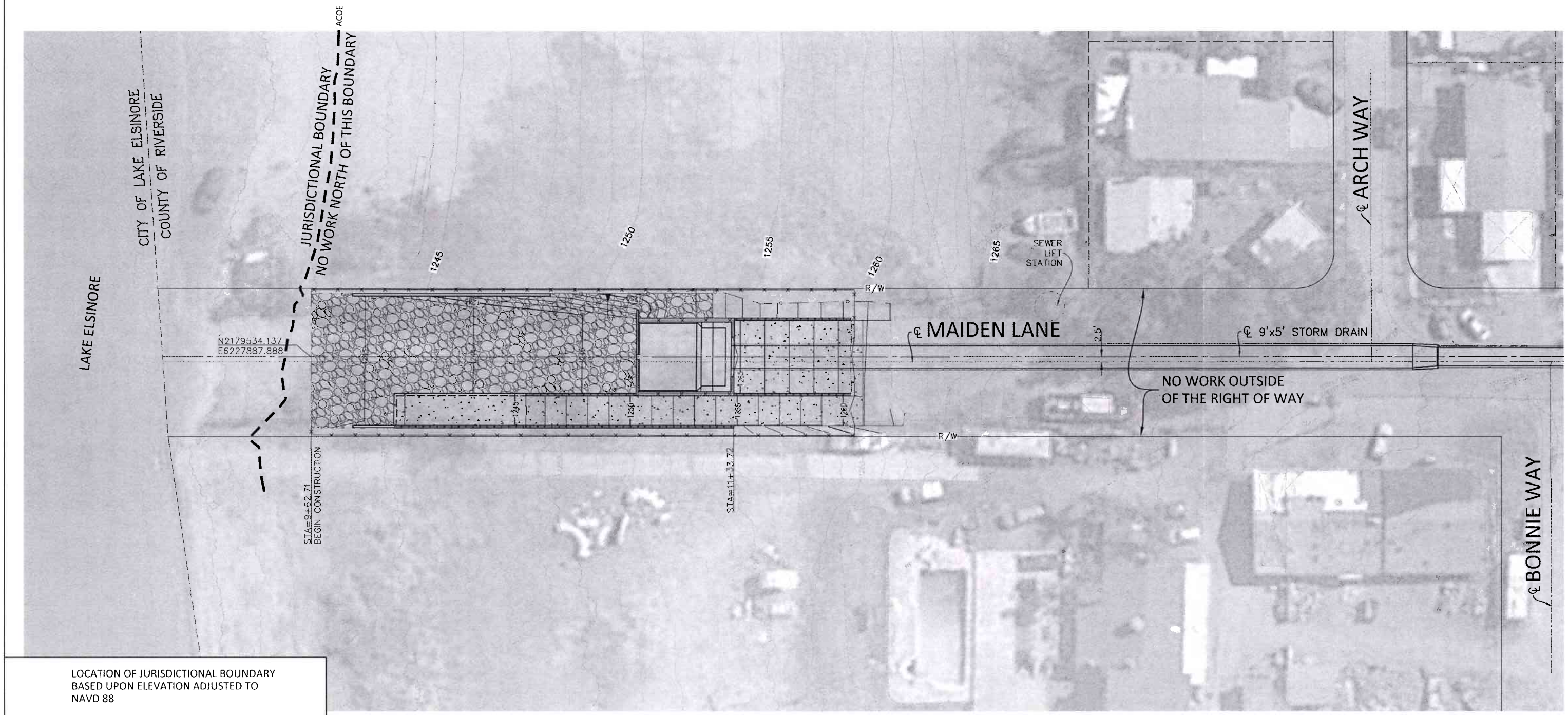

LOCATION OF JURISDICTIONAL BOUNDARY BASED UPON ELEVATION ADJUSTED TO NAVD 88

	ADJUSTED ELEV. (NAVD 88)
ARMY CORP OF ENGINEERS (ACOE):	1241.5
CA DEPARTMENT OF FISH & WILDLIFE:	1267.5
100 YR WS:	1265.8

20' 0' 20'
SCALE 1"=20'

CONSTRUCTION DRAWING SET DATED 22 JUNE, 2021

COUNTY FILE No. 970-B

K&A Engineering, Inc.
ENGINEERING
LAND PLANNING
SURVEYING
357 N. SHERIDAN STREET
SUITE 117
CORONA, CALIFORNIA 92880
TEL. (951) 279-1800
FAX (951) 279-4380

REGISTERED PROFESSIONAL ENGINEER DONALD W. BERGH No. 28949 CIVIL STATE OF CALIFORNIA

Donald Bergh 8/16/2021
ENGINEER R.C.E. 28949 DATE

COUNTY OF RIVERSIDE
TRANSPORTATION DEPARTMENT
RECMD COUNTY OVERSIGHT ENGINEER 8/11/21
APPROVES AS TO COMPLIANCE WITH APPLICABLE COUNTY STANDARDS AND PRACTICES.
REGISTRATION # 76450 DATE SIGNED

Don't Dig...Until You Call U.S.A. Toll Free
DIAL 811
for the location of buried utility lines.
Don't disrupt vital services.
BURIED CABLE
TWO WORKING DAYS BEFORE YOU DIG

BENCH MARK
NAD83 Epoch 2011, CCS83, ZONE 6-
NAVD88(COH88)
RCFC B.M. Z 15502
SET MAG NAIL W/ RCFC WCD TAG FLUSH
E 6,226,565.52 N 2,177,350.50
ELEV.: 1,401.46 SURVEY DATE: 02/2013

REF.	DESCRIPTION	APPR.	DATE
	REVISIONS		

RIVERSIDE COUNTY FLOOD CONTROL AND WATER CONSERVATION DISTRICT
DESIGNED BY: K&A ENGINEERING
DRAWN BY: ADA
DATE DRAWN: JUNE 2021
PB NUMBER: 226078
RECOMMENDED FOR APPROVAL BY: DATE 7-27-2021
APPROVED BY: DATE 8/4/2021

LAKELAND VILLAGE MDP
LINE H
STORM DRAIN
OUTLET WORKS CONSTRUCTION AREA RESTRICTIONS

PROJECT NO. 3-0-00020
DRAWING NO. 3-0207
SHEET NO. 4 OF 65

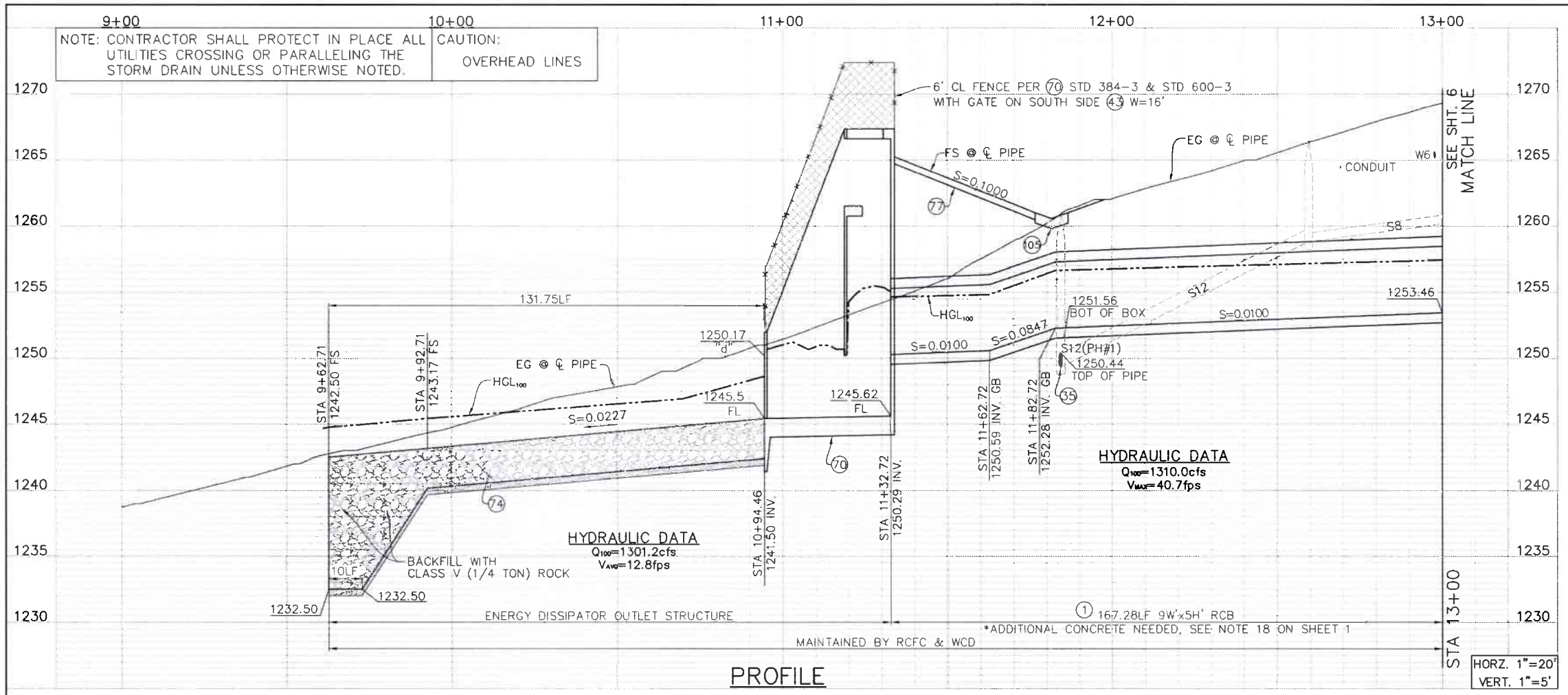

PROFILE

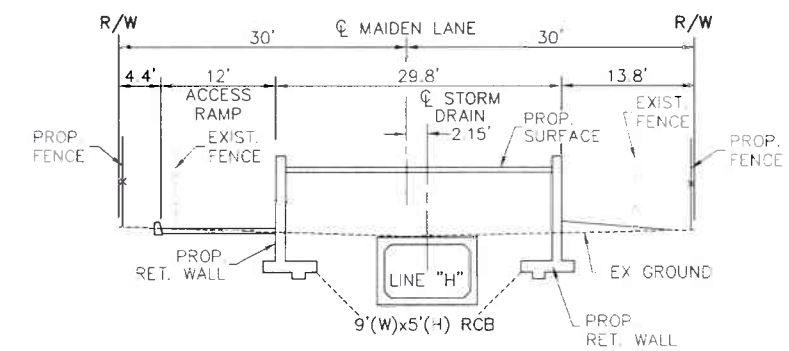

SECTION AT STA 11+50

TYPICAL FROM STA 11+34 TO 11+82.72

10' 0' 10'

SCALE 1"=10'

ENERGY DISSIPATOR PER SPPWC STD. PLAN 384-3 (W=28'):

H = 21'-0" T1 = 20"
L = 37'-6" T2 = 14"
a = 14'-0" T3 = 23"
b = 10'-0" T4 = 17"
c = 14'-0" T5 = 21"
d = 4'-8" T6 = 9"
e = 2'-4"
f = 5'-0"
g = 4'-0"(CUTOFF WALL-MODIFIED)

LEGEND

- B-X = SOIL BORING LOCATION
- PHX = POTHOLE LOCATION MARCH 2018
- PHX = MARKED FOR POTHOLE, NOTHING FOUND
- PHX = POTHOLE LOCATION JULY 2018
- PHX = MARKED FOR POTHOLE, NOTHING FOUND
- MX = POTHOLE LOCATION JUNE 2020
- CP-6 / 27 = CONNECTOR PIPE NUMBER / REFERENCE SHEET NUMBER

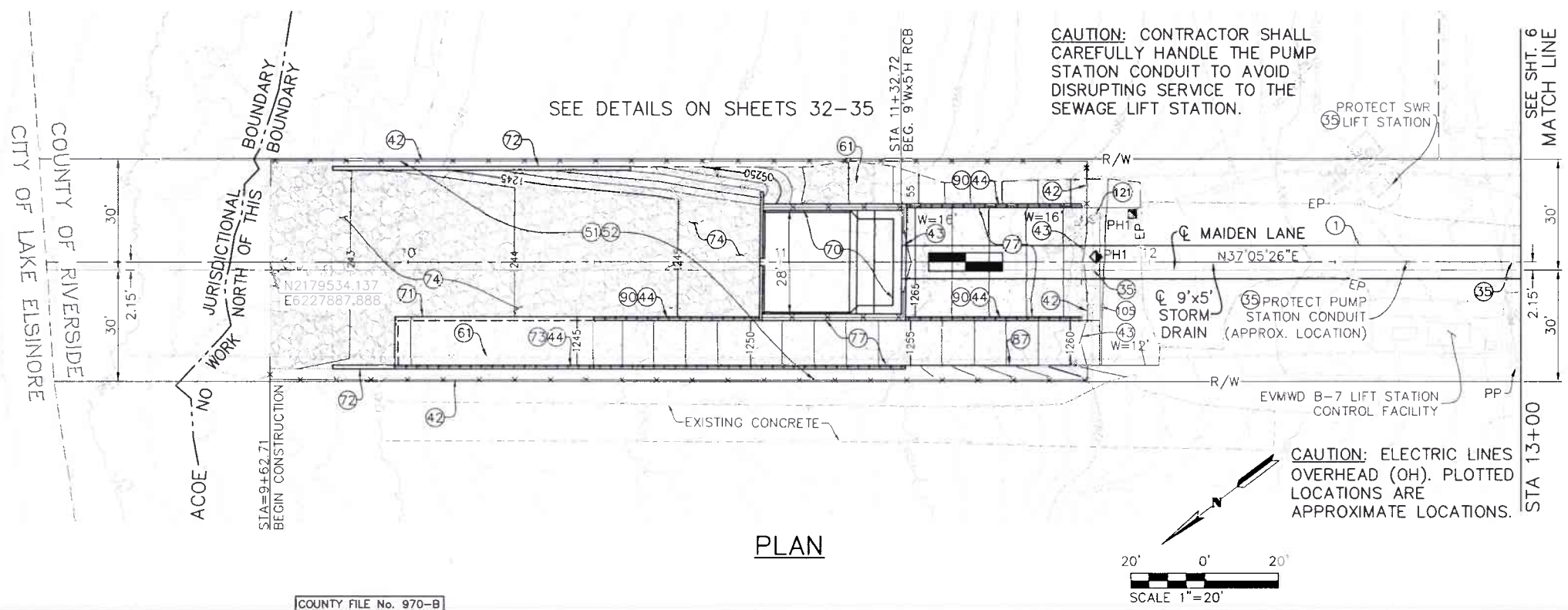

PLAN

CONSTRUCTION NOTES

1. CONSTRUCT 9'WX5'H RCB PER CALTRANS STD. D80 (USE S=10' FOR CONCRETE THICKNESS & REBAR)
35. PROTECT IN PLACE
42. INSTALL 6' HIGH CHAIN LINK FENCE PER RCFC&WCD STD. M801
43. INSTALL DOUBLE DRIVE GATE PER RCFC&WCD STD. M801, W PER PLAN
44. INSTALL CABLE RAILING PER CALTRANS STD. B11-47
51. TRIM OR REMOVE INTERFERING PORTION OF TREE WITHIN RIGHT-OF-WAY
52. REMOVE INTERFERING PORTIONS OF VEGETATION WITHIN RIGHT-OF-WAY
61. REMOVE & LEGALLY DISPOSE OF INTERFERING PORTIONS OF EXISTING FENCE
70. CONSTRUCT ENERGY DISSIPATOR – IMPACT BASIN WITH VERTICAL BAFFLE WALL PER SPPWC STD. PLAN 384-3 (W=28', STRENGTH DESIGN) DETAILS ON SHEET 33
71. CONSTRUCT 4' CUTOFF WALL WITH SLAB TIE-IN PER DETAIL ON SHEET 51
72. CONSTRUCT 6' CUTOFF WALL PER DETAIL ON SHEET 51
73. CONSTRUCT RETAINING WALL TYPE "6A" (CASE1) PER CALTRANS STD. B3-7A
74. PLACE 36" THICK CLASS V (1/4 TON) ROCK SLOPE PROTECTION OVER 6" FILTER MATERIAL OVER FILTER FABRIC PER DETAIL ON SHEET 51
77. CONSTRUCT 6" CONCRETE ACCESS ROAD WITH #4@12" O.C. EACH WAY 2" CLEAR ON TOP
87. CONSTRUCT TYPE "D" CURB PER RCTD STD. NO. 204
90. CONSTRUCT RETAINING WALL TYPE "1A" (CASE 1) PER CALTRANS STD. B3-3A
109. CONSTRUCT CONCRETE CROSS GUTTER PER RCTD STD. NO. 209
121. EXISTING SEWER MANHOLE – ADJUST TO GRADE

CONSTRUCTION DRAWING SET DATED 22 JUNE, 2021

K&A Engineering, Inc. — ENGINEERING, LAND PLANNING, SURVEYING — 357 N. SHERIDAN STREET, SUITE 117, CORONA, CALIFORNIA 92880, TEL. (951) 279-1800, FAX (951) 279-4380

ENGINEER R.C.E. 28949 DATE: 8/16/2021

COUNTY FILE No. 970-B

COUNTY OF RIVERSIDE TRANSPORTATION DEPARTMENT — RECMD COUNTY OVERSIGHT ENGINEER 8/11/21 — APPROVES AS TO COMPLIANCE WITH APPLICABLE COUNTY STANDARDS AND PRACTICES. REGISTRATION # 76450 DATE SIGNED

Don't Dig...Until You Call U.S.A. Toll Free DIAL 811 for the location of buried utility lines. Don't disrupt vital services. TWO WORKING DAYS BEFORE YOU DIG

BENCH MARK: NAD83 Epoch 2011, CCS83, ZONE 6-NAVD88(COH88). RCFC B.M. Z 15502 SET MAG NAIL W/ RCFC WCD TAG FLUSH. E 6,226,565.52 N 2,177,350.50. ELEV.: 1,401.46 SURVEY DATE: 02/2013

REF.	DESCRIPTION	APPR	DATE
	REVISIONS		

RIVERSIDE COUNTY FLOOD CONTROL AND WATER CONSERVATION DISTRICT

DESIGNED BY: K&A ENGINEERING — DRAWN BY: ADA — DATE DRAWN: JUNE 2021 — P8 NUMBER: 226078

RECOMMENDED FOR APPROVAL BY: DATE 7-27-2021 — APPROVED BY: DATE 8/4/2021

LAKELAND VILLAGE MDP STORM DRAIN

LINE H

STA 9+62.71 TO 13+00

PROJECT NO. 3-0-00020

DRAWING NO. 3-0207

SHEET NO. 5 OF 65

NOTE: CONTRACTOR SHALL PROTECT IN PLACE ALL UTILITIES CROSSING OR PARALLELING THE STORM DRAIN UNLESS OTHERWISE NOTED.

CAUTION: OVERHEAD LINES

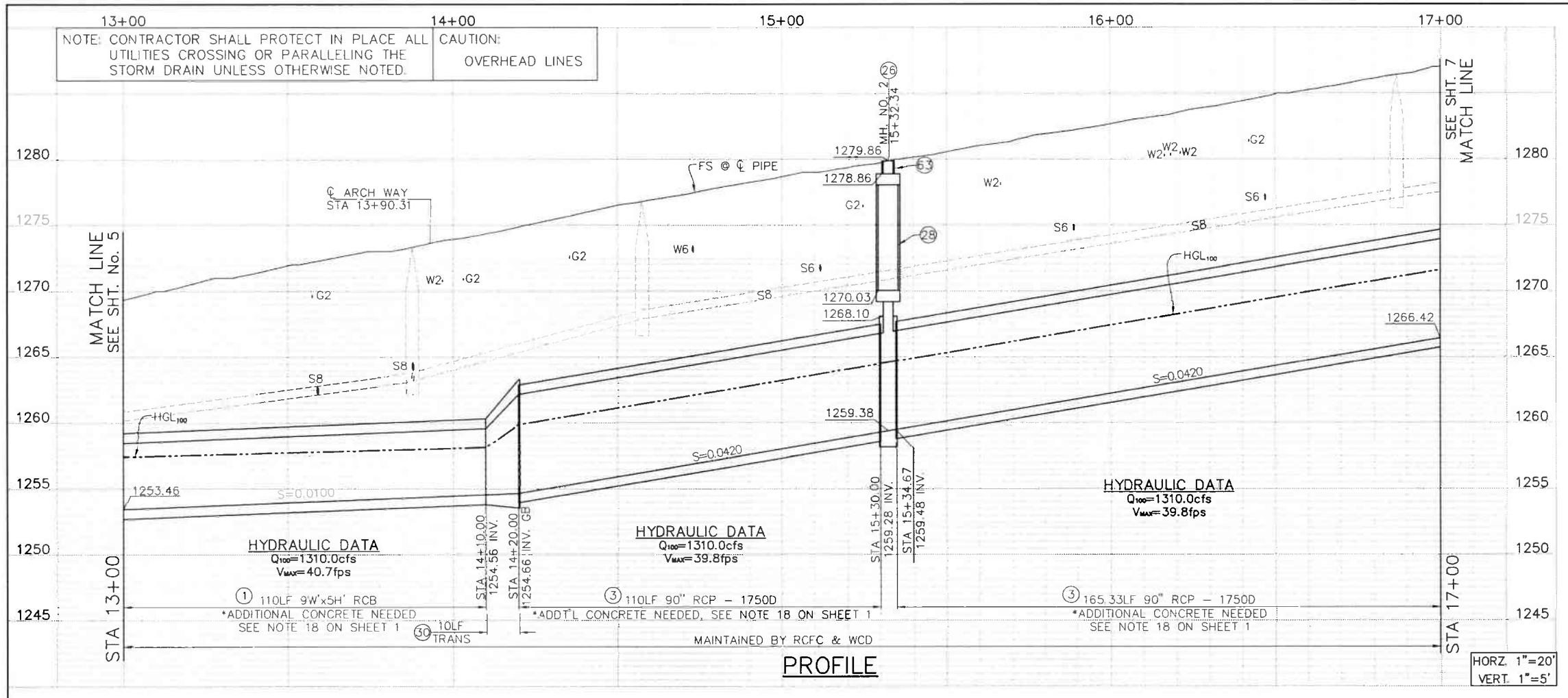

PROFILE

HORZ. 1"=20'
VERT. 1"=5'

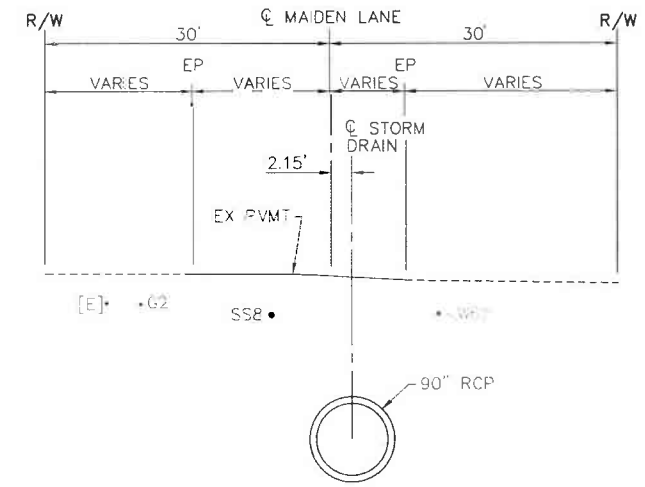

SECTION AT STA 14+50

TYPICAL FROM STA 14+20 TO 17+00

SCALE 1"=10'

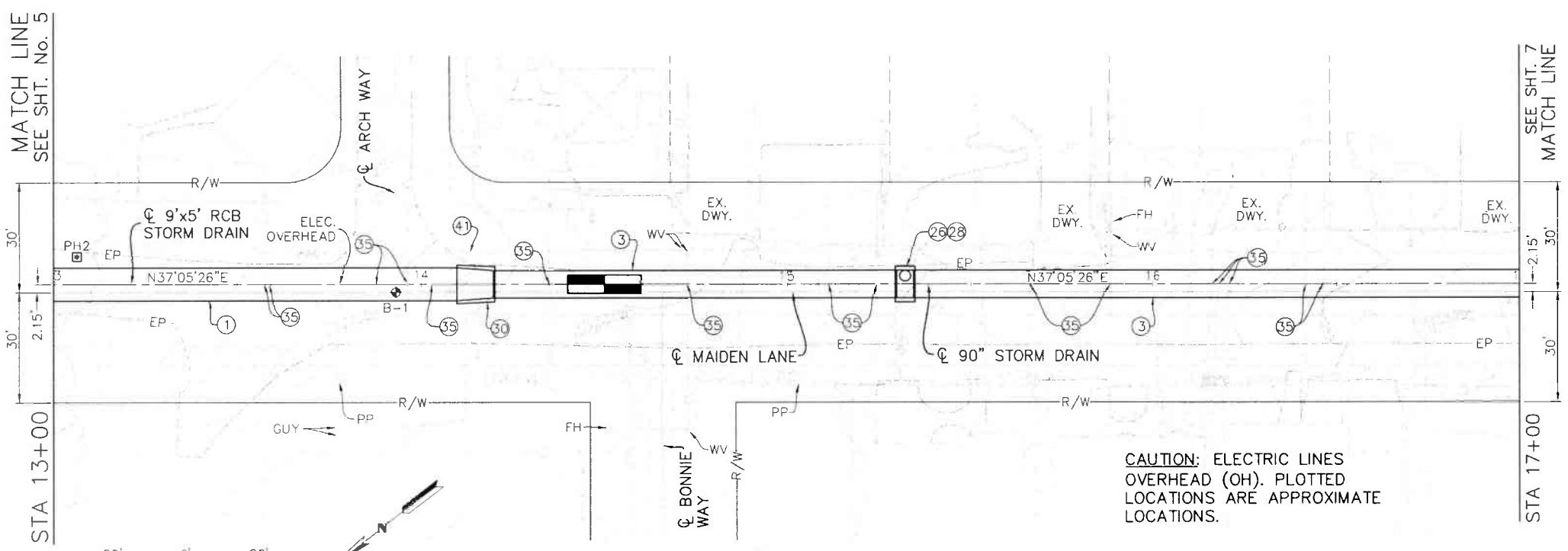

CAUTION: ELECTRIC LINES OVERHEAD (OH). PLOTTED LOCATIONS ARE APPROXIMATE LOCATIONS.

PLAN

LEGEND

- B-X = SOIL BORING LOCATION
- PHX = POTHOLE LOCATION MARCH 2018
- PHX = MARKED FOR POTHOLE, NOTHING FOUND
- PHX = POTHOLE LOCATION JULY 2018
- PHX = MARKED FOR POTHOLE, NOTHING FOUND
- MX = POTHOLE LOCATION JUNE 2020
- CP-6 / 27 = CONNECTOR PIPE NUMBER / REFERENCE SHEET NUMBER

MANHOLE / JUNCTION STRUCTURE DATA								
LATERAL	℄ STATION	WALL STATION	STRUCTURE	A	B	C	D_1	D_2
LINE H	14+10	–	TS NO.1	–	–	–	90"	9'X5'
LINE H	15+30	–	MH NO.2	–	–	–	90"	90"

CONSTRUCTION NOTES

1. CONSTRUCT 9'WX5'H RCB PER CALTRANS STD. D80 (USE S=10' FOR CONCRETE THICKNESS & REBAR)
3. CONSTRUCT 90" RCP
26. CONSTRUCT MANHOLE NO.2 PER RCFC&WCD STD. MH252
28. CONSTRUCT MANHOLE SHAFT SAFETY LEDGE PER RCFC&WCD STD. MH261
30. CONSTRUCT TS NO.1 PER RCFC&WCD STD. TS301
35. PROTECT IN PLACE
41. VERIFY PLOTTED UTILITY IS IN THIS LOCATION, IF FOUND, VERIFY IF ABANDONED & REMOVE AS NEEDED
63. CONSTRUCT MANHOLE SHAFT 36" WITHOUT REDUCER PER SPPWC STD. PLAN 326-2

CONSTRUCTION DRAWING SET DATED 22 JUNE, 2021

K&A Engineering, Inc.
ENGINEERING
LAND PLANNING
SURVEYING
357 N. SHERIDAN STREET
SUITE 117
CORONA, CALIFORNIA 92880
TEL. (951) 279-1800
FAX (951) 279-4380

REGISTERED PROFESSIONAL ENGINEER DONALD W. BERGH No. 28949 CIVIL STATE OF CALIFORNIA

Donald Bergh 8/16/2021
ENGINEER R.C.E. 28949 DATE

COUNTY FILE No. 970-B

COUNTY OF RIVERSIDE TRANSPORTATION DEPARTMENT

RECMD: COUNTY OVERSIGHT ENGINEER 8/11/21

APPROVES AS TO COMPLIANCE WITH APPLICABLE COUNTY STANDARDS AND PRACTICES.

REGISTRATION # 76450 DATE SIGNED

Don't Dig...Until You Call U.S.A. Toll Free DIAL 811 for the location of buried utility lines. Don't disrupt vital services.

TWO WORKING DAYS BEFORE YOU DIG

BENCH MARK
NAD83 Epoch 2011, CCS83, ZONE 6-NAVD88(COH88)
RCFC B.M. Z 15502
SET MAG NAIL W/ RCFC WCD TAG FLUSH
E 6,226,565.52 N 2,177,350.50
ELEV.: 1,401.46 SURVEY DATE: 02/2013

REF.	REVISIONS	APPR	DATE

RIVERSIDE COUNTY FLOOD CONTROL AND WATER CONSERVATION DISTRICT

DESIGNED BY: K&A ENGINEERING
DRAWN BY: ADA
DATE DRAWN: JUNE 2021
PB NUMBER: 226078

RECOMMENDED FOR APPROVAL BY: DATE 7-27-2021
APPROVED BY: DATE 8/4/2021

LAKELAND VILLAGE MDP STORM DRAIN

LINE H

STA 13+00 TO 17+00

PROJECT NO. 3-0-00020
DRAWING NO. 3-0207
SHEET NO. 6 OF 65

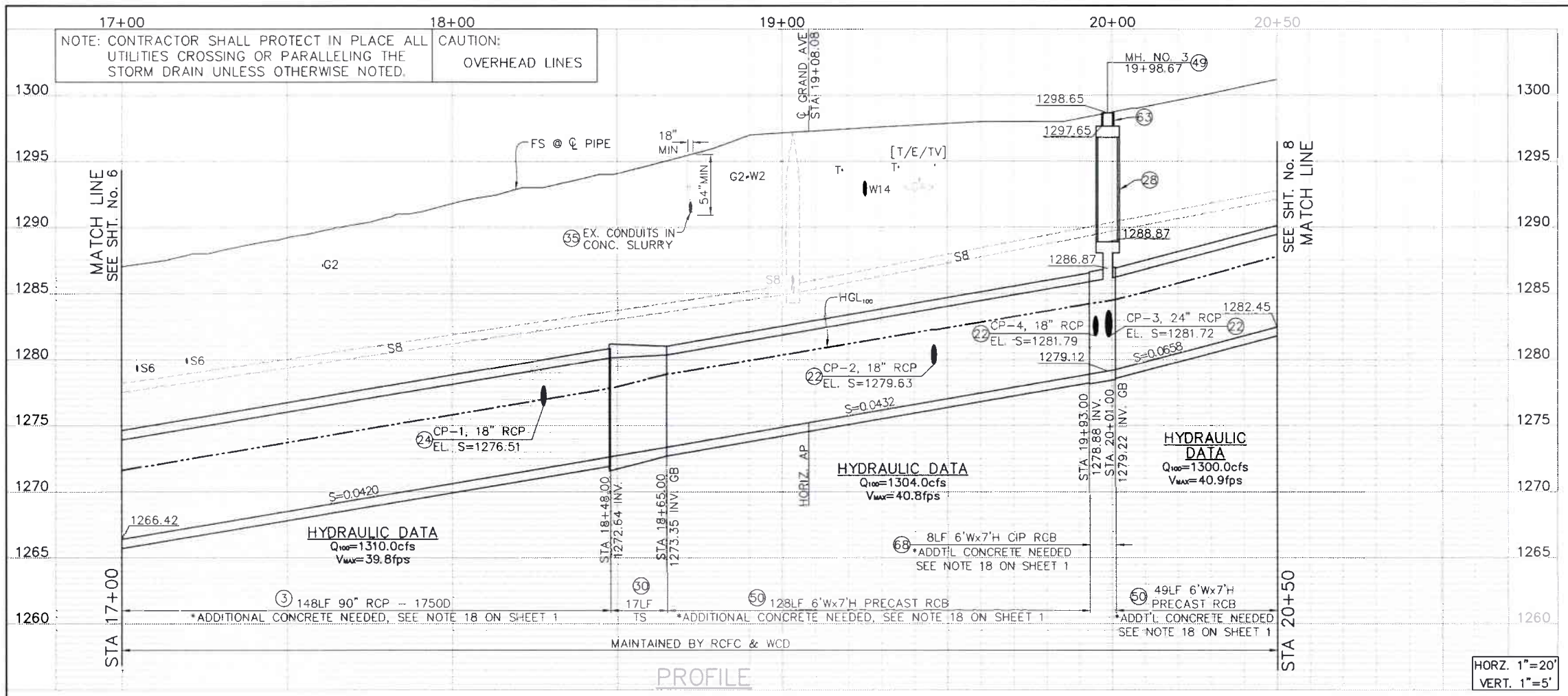

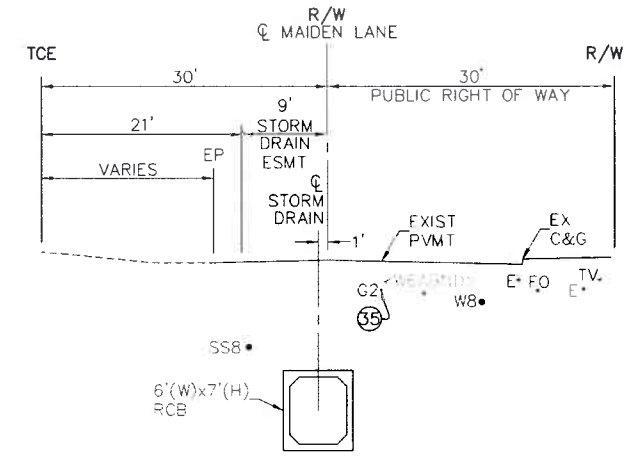

LEGEND

- B-X = SOIL BORING LOCATION
- PHX = POTHOLE LOCATION MARCH 2018
- PHX = MARKED FOR POTHOLE, NOTHING FOUND
- PHX = POTHOLE LOCATION JULY 2018
- PHX = MARKED FOR POTHOLE, NOTHING FOUND
- MX = POTHOLE LOCATION JUNE 2020
- CP-6 / 27 = CONNECTOR PIPE NUMBER / REFERENCE SHEET NUMBER

MANHOLE / JUNCTION STRUCTURE DATA

LATERAL	℄ STATION	WALL STATION	STRUCTURE	A	D_1	D_2	ELEV S
CP-1	18+27.57	18+27.57	JS NO.4	90°	90"	90"	1276.51
LINE H	18+48	–	TS NO.1	–	90"	6'x7'	–
CP-2	19+45.74	19+45.74	JS NO.3	90°	6'x7'	6'x7'	1279.63
CP-3	19+99	19+99	JS NO.3	90°	6'x7'	6'x7'	1281.72
CP-4	19+95	19+95	JS NO.3	90°	6'x7'	6'x7'	1281.79

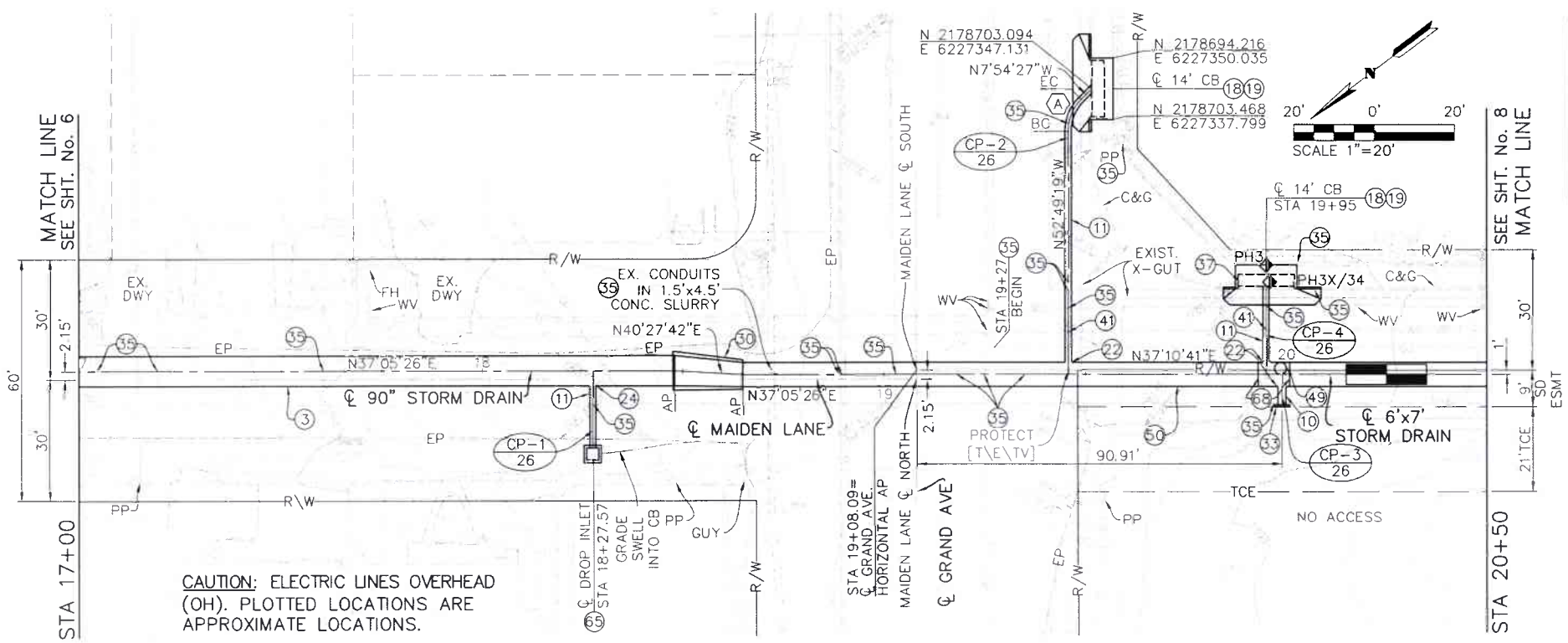

CURVE DATA	(A)
R	11.25'
Δ	44°54'51"
L	8.82'
T	4.65'
B.C.	STA 10+60.32
E.C.	STA 10+69.14
P.I. NORTHING	2178711.385
P.I. EASTING	6227345.98

CONSTRUCTION NOTES

(3) CONSTRUCT 90" RCP
(10) CONSTRUCT 24" RCP
(11) CONSTRUCT 18" RCP
(18) CONSTRUCT CATCH BASIN PER RCTD STD. NO. 300 & PER DETAIL ON SHEET 3
(19) CONSTRUCT GUTTER DEPRESSION PER RCTD STD. NO. 311
(22) CONSTRUCT JS NO.3 PER RCFC&WCD STD. JS228
(24) CONSTRUCT JS NO.4 PER RCFC&WCD STD. JS229
(28) CONSTRUCT MANHOLE SHAFT SAFETY LEDGE PER RCFC&WCD STD. MH261
(30) CONSTRUCT TS NO.1 PER RCFC&WCD STD. TS301
(33) CONSTRUCT CONCRETE BULKHEAD PER RCFC&WCD STD. M816
(35) PROTECT IN PLACE
(37) FIBER OPTIC TO BE RELOCATED BY FRONTIER PRIOR TO CONSTRUCTION
(41) VERIFY PLOTTED UTILITY IS IN THIS LOCATION, IF FOUND, VERIFY IF ABANDONED & REMOVE AS NEEDED
(49) CONSTRUCT MANHOLE NO.3 PER RCFC&WCD STD. MH253
(50) INSTALL 6'Wx7'H PRECAST RCB PER CALTRANS STD. D83A & D83B (USE S=7' & H=7' FOR CONCRETE THICKNESS & REBAR)
(63) CONSTRUCT MANHOLE SHAFT 36" WITHOUT REDUCER PER SPPWC STD. PLAN 326-2
(65) CONSTRUCT CONCRETE DROP INLET PER RCFC&WCD STD. CB110
(68) CONSTRUCT 6'Wx7'H RCB PER CALTRANS STD. D80 (USE S=7' & H=7' FOR CONCRETE THICKNESS & REBAR) CONCRETE COVER 3-1/2" OVER REBAR

CONSTRUCTION DRAWING SET DATED 22 JUNE, 2021

K&A Engineering, Inc.
ENGINEERING LAND PLANNING SURVEYING
357 N. SHERIDAN STREET SUITE 117 CORONA, CALIFORNIA 92880 TEL: (951) 279-1800 FAX (951) 279-4380

REGISTERED PROFESSIONAL ENGINEER DONALD W. BEECH No. 28949 CIVIL STATE OF CALIFORNIA

Donald Beech 8/16/2021
ENGINEER R.C.E. 28949 DATE:

COUNTY FILE No. 970-B
COUNTY OF RIVERSIDE TRANSPORTATION DEPARTMENT
RECMD COUNTY OVERSIGHT ENGINEER 8/11/21
APPROVES AS TO COMPLIANCE WITH APPLICABLE COUNTY STANDARDS AND PRACTICES.
REGISTRATION # 76450 DATE SIGNED

Don't Dig...Until You Call U.S.A. Toll Free DIAL 811 for the location of buried utility lines. Don't disrupt vital services.
TWO WORKING DAYS BEFORE YOU DIG

BENCH MARK
NAD83 Epoch 2011, CCS83, ZONE 6- NAVD88(COH88)
RCFC B.M. Z 15502
SET MAG NAIL W/ RCFC WCD TAG FLUSH
E 6,226,565.52 N 2,177,350.50
ELEV.: 1,401.46 SURVEY DATE: 02/2013

REF.	REVISIONS	APPR	DATE

RIVERSIDE COUNTY FLOOD CONTROL AND WATER CONSERVATION DISTRICT
DESIGNED BY: K&A ENGINEERING
DRAWN BY: ADA
DATE DRAWN: JUNE 2021
P8 NUMBER: 226078
RECOMMENDED FOR APPROVAL BY: DATE 7-27-2021
APPROVED BY: DATE 8/4/2021

LAKELAND VILLAGE MDP STORM DRAIN

LINE H

STA 17+00 TO 20+50

PROJECT NO. 3-0-00020
DRAWING NO. 3-0207
SHEET NO. 7 OF 65

NOTE: CONTRACTOR SHALL PROTECT IN PLACE ALL UTILITIES CROSSING OR PARALLELING THE STORM DRAIN UNLESS OTHERWISE NOTED.

CAUTION: OVERHEAD LINES

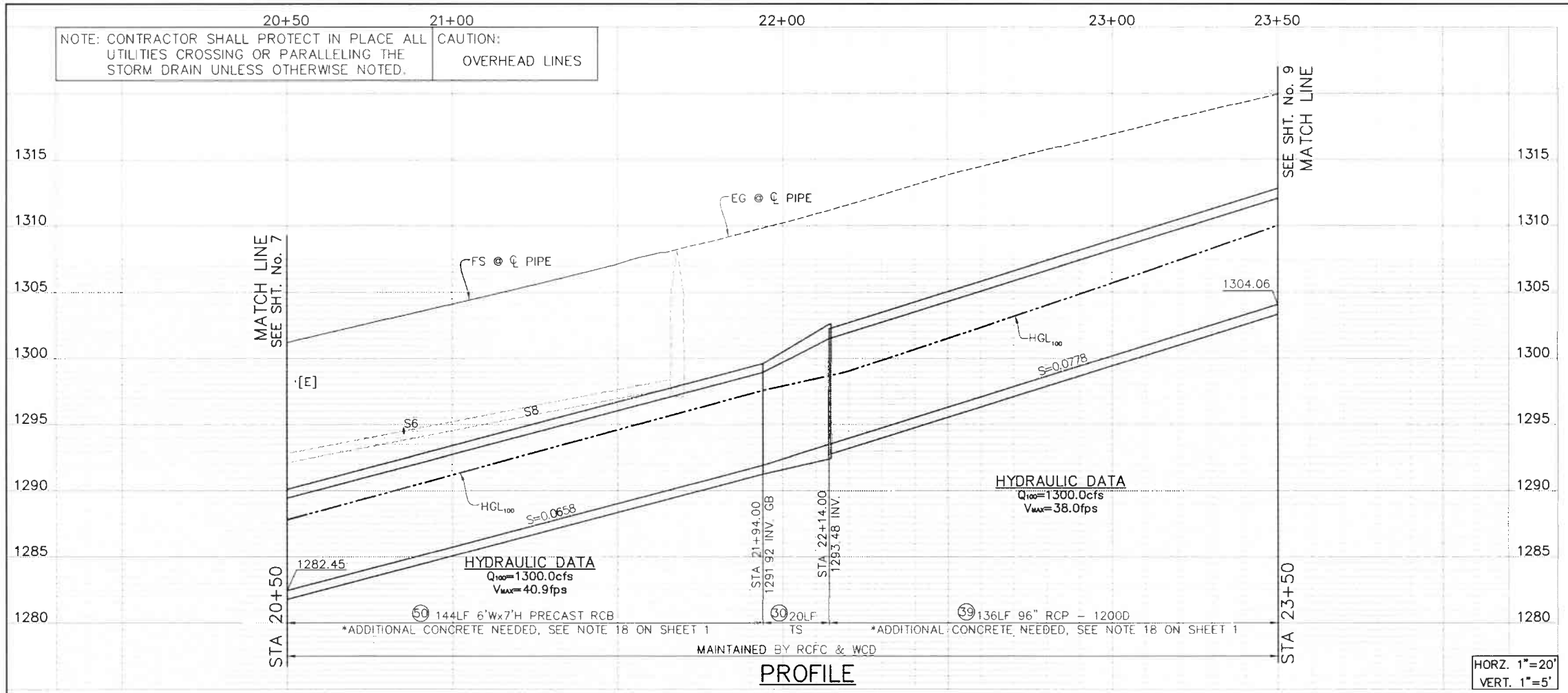

PROFILE

HORZ. 1"=20'
VERT. 1"=5'

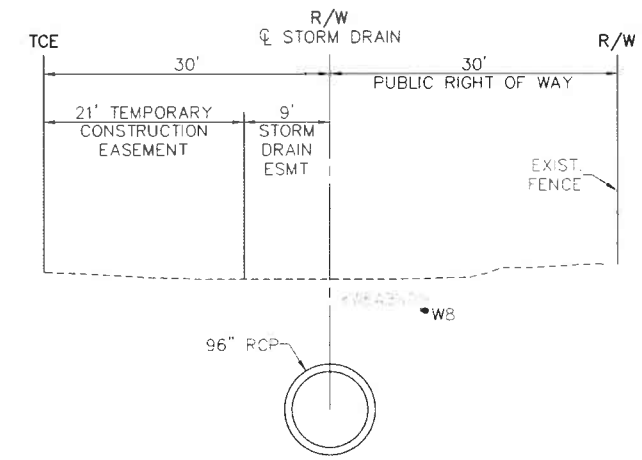

SECTION AT STA 22+50
TYPICAL FROM STA 22+14 TO STA 23+50

10' 0' 10'
SCALE 1"=10'

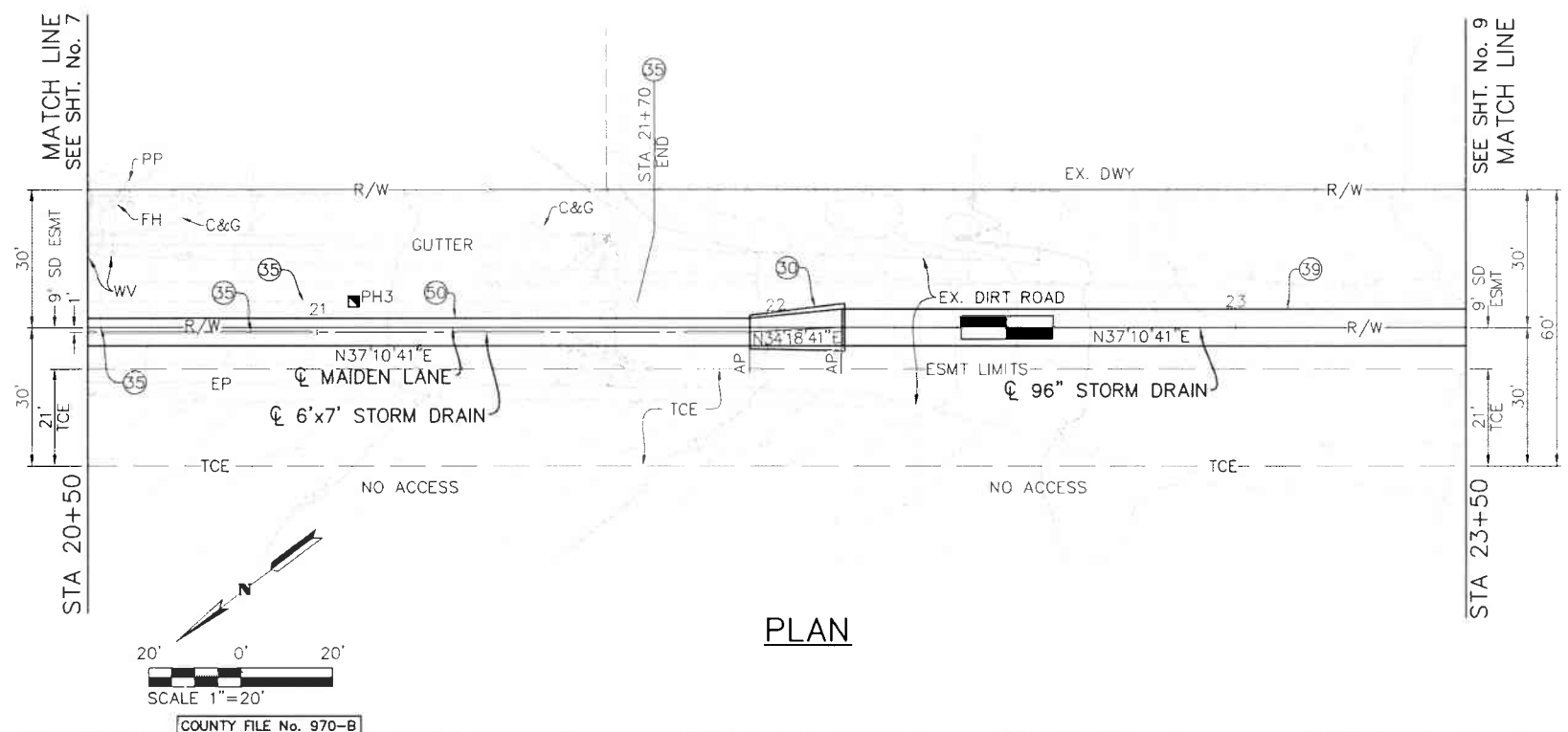

PLAN

LEGEND

- B-X = SOIL BORING LOCATION
- PHX = POTHOLE LOCATION MARCH 2018
- PHX = MARKED FOR POTHOLE, NOTHING FOUND
- PHX = POTHOLE LOCATION JULY 2018
- PHX = MARKED FOR POTHOLE, NOTHING FOUND
- MX = POTHOLE LOCATION JUNE 2020
- CP-6 / 27 = CONNECTOR PIPE NUMBER / REFERENCE SHEET NUMBER

MANHOLE / JUNCTION STRUCTURE DATA				
LATERAL	℄ STATION	WALL STATION	STRUCTURE	ELEV S
LINE H	21+94	–	TS NO.1	–

CONSTRUCTION NOTES

30 CONSTRUCT TS NO.1 PER RCFC&WCD STD. TS301

35 PROTECT IN PLACE

39 CONSTRUCT 96" RCP

50 INSTALL 6'Wx7'H PRECAST RCB PER CALTRANS STD. D83A & D83B (USE S=7' & H=7' FOR CONCRETE THICKNESS & REBAR)

CONSTRUCTION DRAWING SET DATED 22 JUNE, 2021

K&A Engineering, Inc.
ENGINEERING LAND PLANNING SURVEYING
357 N. SHERIDAN STREET SUITE 117 CORONA, CALIFORNIA 92880 TEL. (951) 279-1800 FAX (951) 279-4380

REGISTERED PROFESSIONAL ENGINEER DONALD W. BOYCH No. 28949 CIVIL STATE OF CALIFORNIA

Donald Boych 8/16/2021
ENGINEER R.C.E. 28949 DATE:

COUNTY FILE No. 970-B

COUNTY OF RIVERSIDE TRANSPORTATION DEPARTMENT
RECMD COUNTY OVERSIGHT ENGINEER 8/11/21
APPROVES AS TO COMPLIANCE WITH APPLICABLE COUNTY STANDARDS AND PRACTICES.
REGISTRATION # 76450 DATE SIGNED

Don't Dig...Until You Call U.S.A. Toll Free DIAL 811 for the location of buried utility lines. Don't disrupt vital services.
TWO WORKING DAYS BEFORE YOU DIG

BENCH MARK
NAD83 Epoch 2011, CCS83, ZONE 6– NAVD88(COH88)
RCFC B.M. Z 15502
SET MAG NAIL W/ RCFC WCD TAG FLUSH
E 6,226,565.52 N 2,177,350.50
ELEV: 1,401.46 SURVEY DATE: 02/2013

REF	DESCRIPTION	APPR	DATE
	REVISIONS		

RIVERSIDE COUNTY FLOOD CONTROL AND WATER CONSERVATION DISTRICT
DESIGNED BY: K&A ENGINEERING
DRAWN BY: ADA
DATE DRAWN: JUNE 2021
PB NUMBER: 226078
RECOMMENDED FOR APPROVAL BY: DATE 7-27-2021
APPROVED BY: DATE 8/4/2021

LAKELAND VILLAGE MDP STORM DRAIN
LINE H
STA 20+500 TO 23+50

PROJECT NO. 3-0-00020
DRAWING NO. 3-0207
SHEET NO. 8 OF 65

NOTE: CONTRACTOR SHALL PROTECT IN PLACE ALL UTILITIES CROSSING OR PARALLELING THE STORM DRAIN UNLESS OTHERWISE NOTED.

CAUTION: OVERHEAD LINES

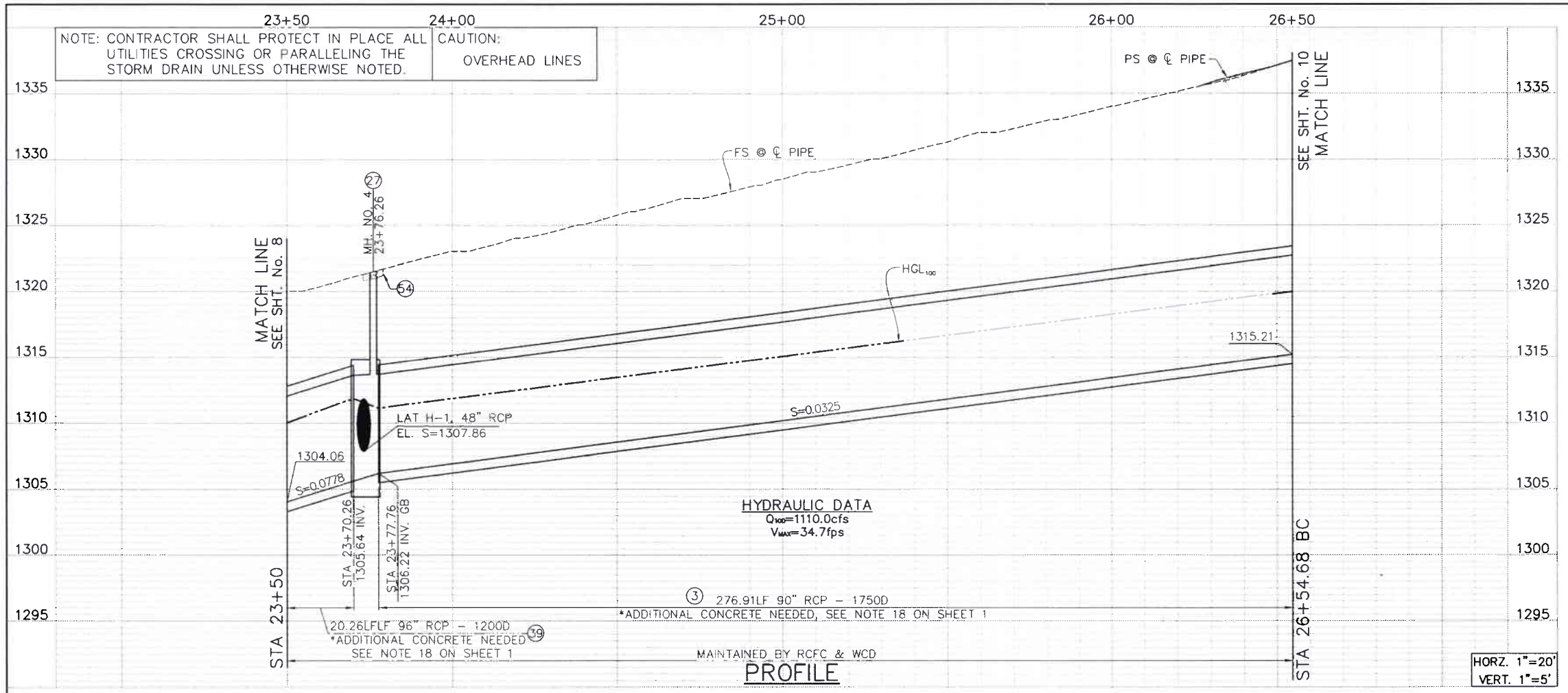

PROFILE

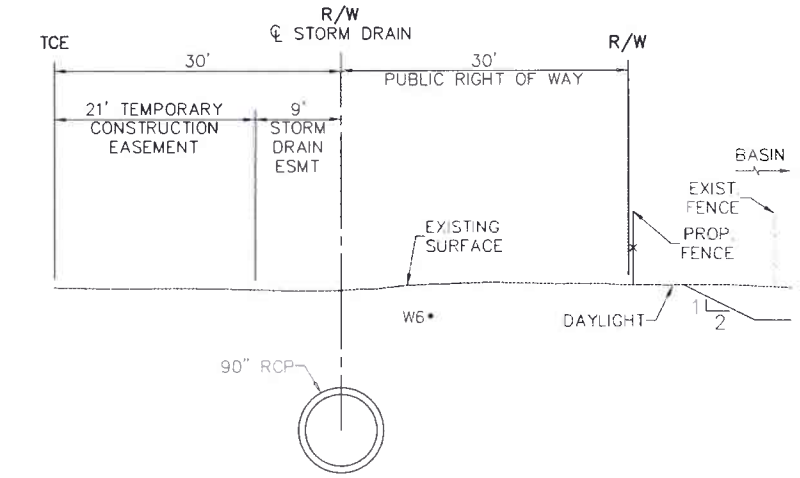

SECTION AT STA 25+00

TYPICAL FROM STA 23+77.76 TO STA 26+54.68

SCALE 1"=10'

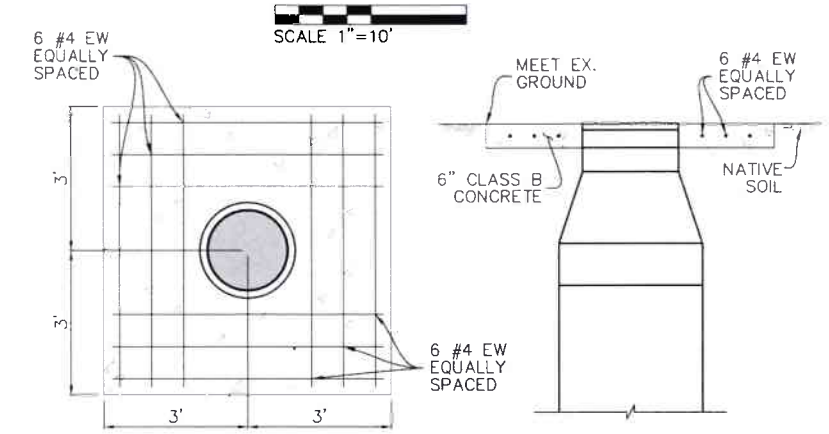

(54) CONCRETE PAD DETAIL

NTS

NOTE: CONCRETE PADS ARE LOCATED IN AREAS WHERE PROPOSED MANHOLES ARE NOT IN PAVEMENT.

FOR BASIN DETAILS SEE SHEETS 36-40

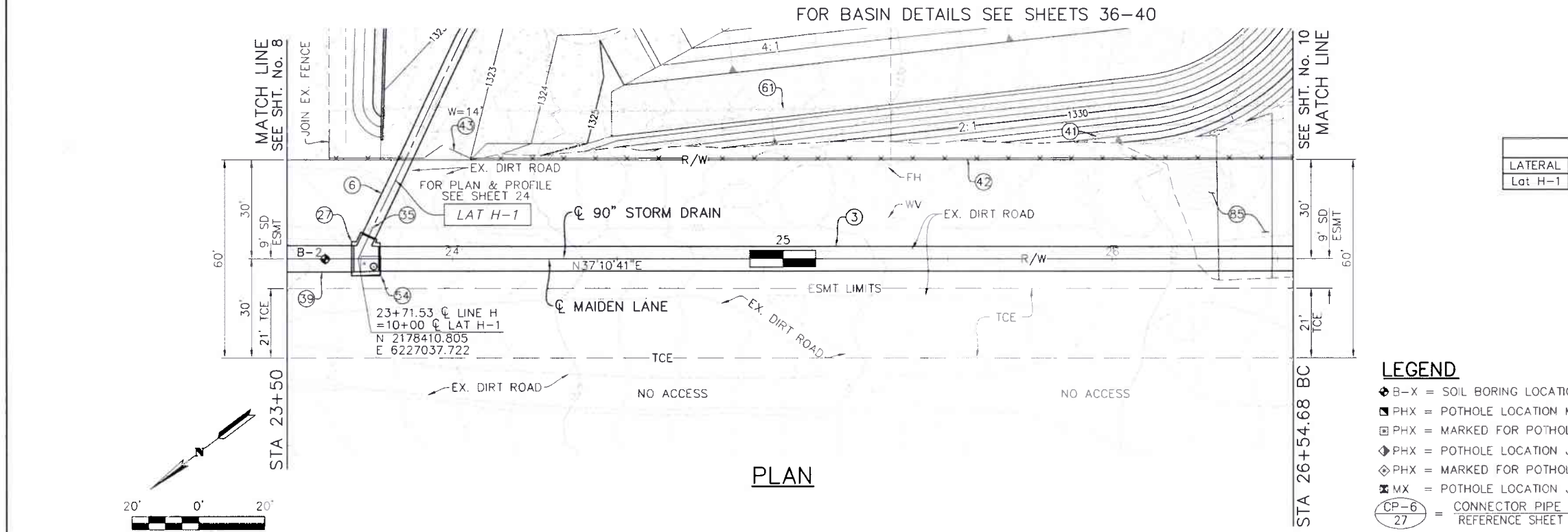

PLAN

MANHOLE / JUNCTION STRUCTURE DATA										
LATERAL	℄ STATION	WALL STATION	STRUCTURE	A	B	C	D_1	D_2	ELEV S	ELEV R
Lat H-1	23+71.53	23+73.36	MH NO.4	64'48'8"	48"	7.8'	90"	96"	1307.86	1307.96

LEGEND

- B-X = SOIL BORING LOCATION
- PHX = POTHOLE LOCATION MARCH 2018
- PHX = MARKED FOR POTHOLE, NOTHING FOUND
- PHX = POTHOLE LOCATION JULY 2018
- PHX = MARKED FOR POTHOLE, NOTHING FOUND
- MX = POTHOLE LOCATION JUNE 2020
- CP-6 / 27 = CONNECTOR PIPE NUMBER / REFERENCE SHEET NUMBER

CONSTRUCTION NOTES

(3) CONSTRUCT 90" RCP

(6) CONSTRUCT 48" RCP

(27) CONSTRUCT MANHOLE NO.4 PER RCFC&WCD STD. MH254

(35) PROTECT IN PLACE

(39) CONSTRUCT 96" RCP

(41) VERIFY PLOTTED UTILITY IS IN THIS LOCATION, IF FOUND, VERIFY IF ABANDONED & REMOVE AS NEEDED

(42) INSTALL 6' HIGH CHAIN LINK FENCE PER RCFC&WCD STD. M801

(43) INSTALL DOUBLE DRIVE GATE PER RCFC&WCD STD. M801, W PER PLAN

(54) CONSTRUCT 6'x6'x6" CLASS B CONCRETE SLAB AROUND MANHOLE PER DETAIL HEREON

(61) REMOVE & LEGALLY DISPOSE OF INTERFERING PORTIONS OF EXISTING FENCE

(85) GRADE MAIDEN LANE AS SHOWN WITHIN LIMITS OR AS DIRECTED BY ENGINEER

CONSTRUCTION DRAWING SET DATED 22 JUNE, 2021

K&A Engineering, Inc.
ENGINEERING LAND PLANNING SURVEYING
357 N. SHERIDAN STREET SUITE 117 CORONA, CALIFORNIA 92880 TEL. (951) 279-1800 FAX (951) 279-4380
ENGINEER R.C.E. 28949 DATE: 8/16/2021
REGISTERED PROFESSIONAL ENGINEER DONALD W. BERGH No. 28949 CIVIL STATE OF CALIFORNIA

COUNTY FILE No. 970-B

COUNTY OF RIVERSIDE TRANSPORTATION DEPARTMENT

RECMD COUNTY OVERSIGHT ENGINEER 8/11/21

APPROVES AS TO COMPLIANCE WITH APPLICABLE COUNTY STANDARDS AND PRACTICES

REGISTRATION # 76450 DATE SIGNED

Don't Dig...Until You Call U.S.A. Toll Free DIAL 811 for the location of buried utility lines. Don't disrupt vital services.

TWO WORKING DAYS BEFORE YOU DIG

BENCH MARK
NAD83 Epoch 2011, CCS83, ZONE 6-NAVD88(COH88)
RCFC B.M. Z 15502
SET MAG NAIL W/ RCFC WCD TAG FLUSH
E 6,226,565.52 N 2,177,350.50
ELEV.: 1,401.46 SURVEY DATE: 02/2013

REVISIONS			
REF	DESCRIPTION	APPR.	DATE

RIVERSIDE COUNTY FLOOD CONTROL AND WATER CONSERVATION DISTRICT

DESIGNED BY: K&A ENGINEERING
DRAWN BY: ADA
DATE DRAWN: JUNE 2021
IPS NUMBER: 226078

RECOMMENDED FOR APPROVAL BY: DATE 7-27-2021

APPROVED BY: DATE 8/4/2021

LAKELAND VILLAGE MDP STORM DRAIN

LINE H

STA 23+50 TO 26+54.67

PROJECT NO. 3-0-00020

DRAWING NO. 3-0207

SHEET NO. 9 OF 65

NOTE: CONTRACTOR SHALL PROTECT IN PLACE ALL UTILITIES CROSSING OR PARALLELING THE STORM DRAIN UNLESS OTHERWISE NOTED.

CAUTION: OVERHEAD LINES

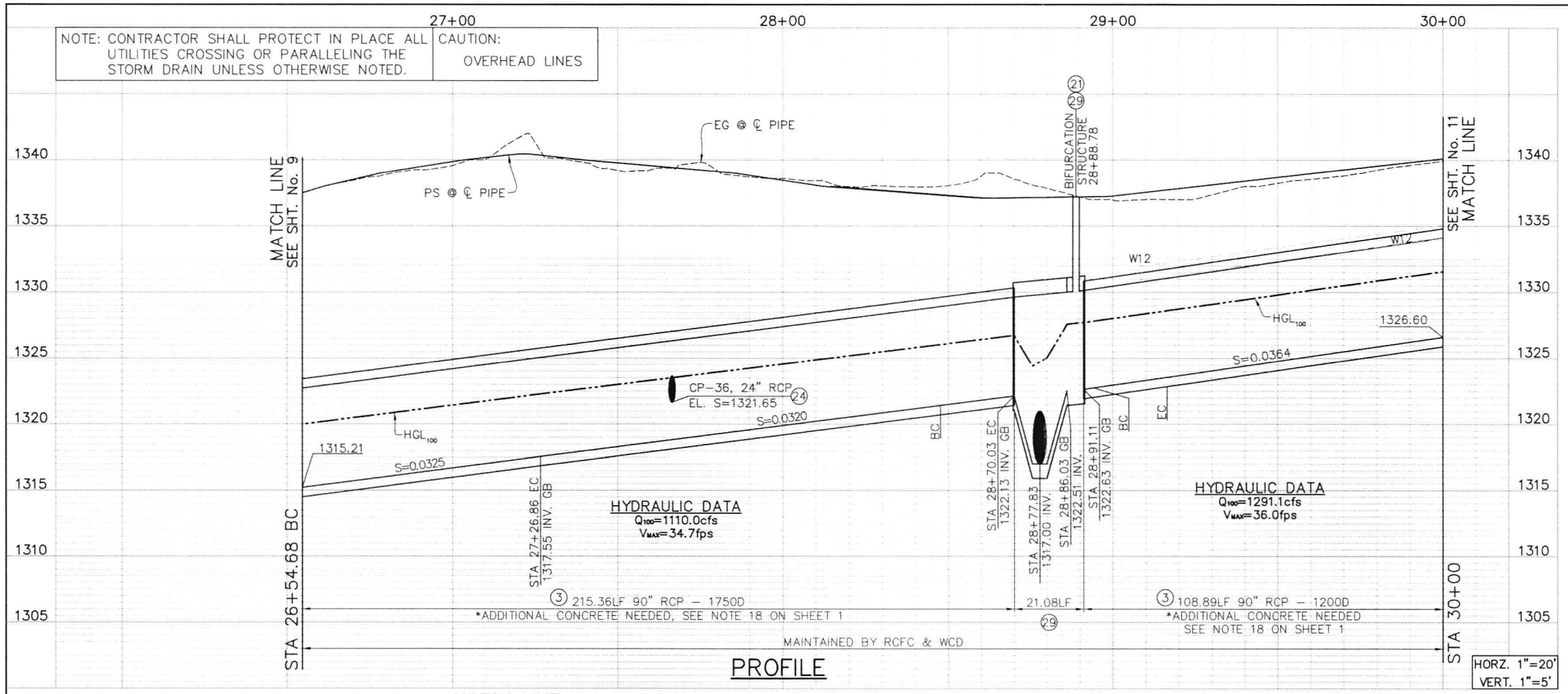

PROFILE

HORZ. 1"=20'
VERT. 1"=5'

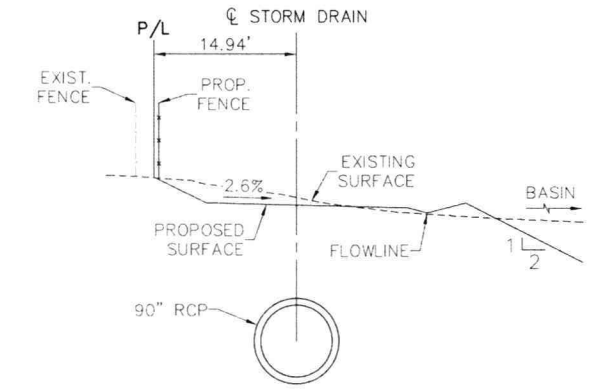

SECTION AT STA 28+00

TYPICAL FROM STA 27+26.86 TO STA 28+47.66

10' 0' 10'
SCALE 1"=10'

LEGEND

- B-X = SOIL BORING LOCATION
- PHX = POTHOLE LOCATION MARCH 2018
- PHX = MARKED FOR POTHOLE, NOTHING FOUND
- PHX = POTHOLE LOCATION JULY 2018
- PHX = MARKED FOR POTHOLE, NOTHING FOUND
- MX = POTHOLE LOCATION JUNE 2020
- CP-6 / 27 = CONNECTOR PIPE NUMBER / REFERENCE SHEET NUMBER

CURVE DATA		⟨A⟩	⟨B⟩	⟨C⟩
R		45.0'	45.0'	45.0'
Δ		91°54'25"	28°29'05"	28°29'05"
L		72.18'	22.37'	22.37'
T		46.52'	11.42'	11.42'
B.C.		STA 26+54.68	STA 28+47.66	STA 28+94.10
E.C.		STA 27+26.86	STA 28+70.03	STA 29+16.47
P.I.	NORTHING	2178148.140	2178044.923	2178002.851
	EASTING	6226838.506	6226984.442	6227005.184

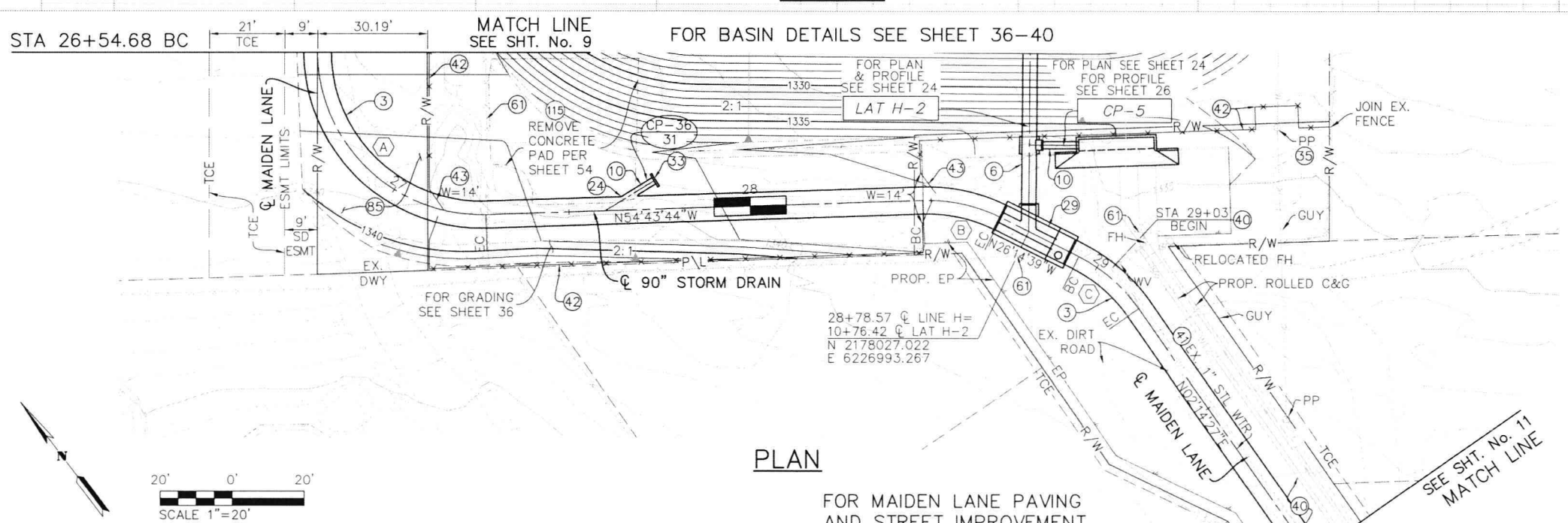

PLAN

FOR MAIDEN LANE PAVING AND STREET IMPROVEMENT DETAILS BETWEEN THE BASIN AND COTTRELL AVENUE, SEE SHEETS 55-57.

CONSTRUCTION NOTES

(3) CONSTRUCT 90" RCP
(6) CONSTRUCT 48" RCP
(10) CONSTRUCT 24" RCP
(21) CONSTRUCT STANDARD PRESSURE MANHOLE SHAFT PER RCFC&WCD STD. MH258 WITH FRAME & COVER PER RCFC&WCD STD. MH256
(24) CONSTRUCT JS NO.4 PER RCFC&WCD STD. JS229
(29) CONSTRUCT BIFURCATION STRUCTURE PER DETAIL ON SHEET 39
(33) CONSTRUCT CONCRETE BULKHEAD PER RCFC&WCD STD. M816
(35) PROTECT IN PLACE
(40) RELOCATE WATER PER WATER IMPROVEMENT PLAN ON SHEETS W1-W5
(42) INSTALL 6' HIGH CHAIN LINK FENCE PER RCFC&WCD STD. M801
(43) INSTALL DOUBLE DRIVE GATE PER RCFC&WCD STD. M801, W PER PLAN
(61) REMOVE & LEGALLY DISPOSE OF INTERFERING PORTIONS OF EXISTING FENCE
(85) GRADE MAIDEN LANE AS SHOWN WITHIN LIMITS OR AS DIRECTED BY ENGINEER
(115) REMOVE & LEGALLY DISPOSE OF EXISTING CONCRETE CURB, GUTTER, SIDEWALK, DRIVEWAY & MISC. CONCRETE, AS REQUIRED FOR CONSTRUCTION

CONSTRUCTION DRAWING SET DATED 22 JUNE, 2021

MANHOLE / JUNCTION STRUCTURE DATA										
LATERAL	℄ STATION	WALL STATION	STRUCTURE	A	B	C	D_1	D_2	ELEV S	ELEV R
LAT H-2	28+78.57	28+77.83	BIFURCATION	116°5'56"	48"	7.7	90"	90"	1317.00	1316.92
CP-36	27+60	27+66.50'	JS NO.4	30°	24"	–	90"	90"	1321.65	–

K&A Engineering, Inc.
ENGINEERING LAND PLANNING SURVEYING
357 N. SHERIDAN STREET SUITE 117 CORONA, CALIFORNIA 92880 TEL. (951) 279-1800 FAX (951) 279-4380

REGISTERED PROFESSIONAL ENGINEER DONALD W. BERGH No. 28949 CIVIL STATE OF CALIFORNIA

ENGINEER R.C.E. 28949 DATE: 8/16/2021

COUNTY FILE No. 970-B

COUNTY OF RIVERSIDE TRANSPORTATION DEPARTMENT

RECMD: COUNTY OVERSIGHT ENGINEER 7/1/21

APPROVES AS TO COMPLIANCE WITH APPLICABLE COUNTY STANDARDS AND PRACTICES.

REGISTRATION # 76450 DATE SIGNED

Don't Dig...Until You Call U.S.A. Toll Free DIAL 811 for the location of buried utility lines. Don't disrupt vital services.

TWO WORKING DAYS BEFORE YOU DIG

BENCH MARK
NAD83 Epoch 2011, CCS83, ZONE 6- NAVD88(COH88)
RCFC B.M. Z 15502
SET MAG NAIL W/ RCFC WCD TAG FLUSH
E 6,226,565.52 N 2,177,350.50
ELEV.: 1,401.46 SURVEY DATE: 02/2013

REF.	REVISIONS DESCRIPTION	APPR.	DATE

RIVERSIDE COUNTY FLOOD CONTROL AND WATER CONSERVATION DISTRICT

DESIGNED BY: K&A ENGINEERING
DRAWN BY: ADA
DATE DRAWN: JUNE 2021
P8 NUMBER: 226078

RECOMMENDED FOR APPROVAL BY: DATE 7-27-2021

APPROVED BY: DATE 8/4/2021

LAKELAND VILLAGE MDP STORM DRAIN

LINE H

STA 26+54.67 TO 30+00

PROJECT NO. 3-0-00020
DRAWING NO. 3-0207
SHEET NO. 10 OF 65

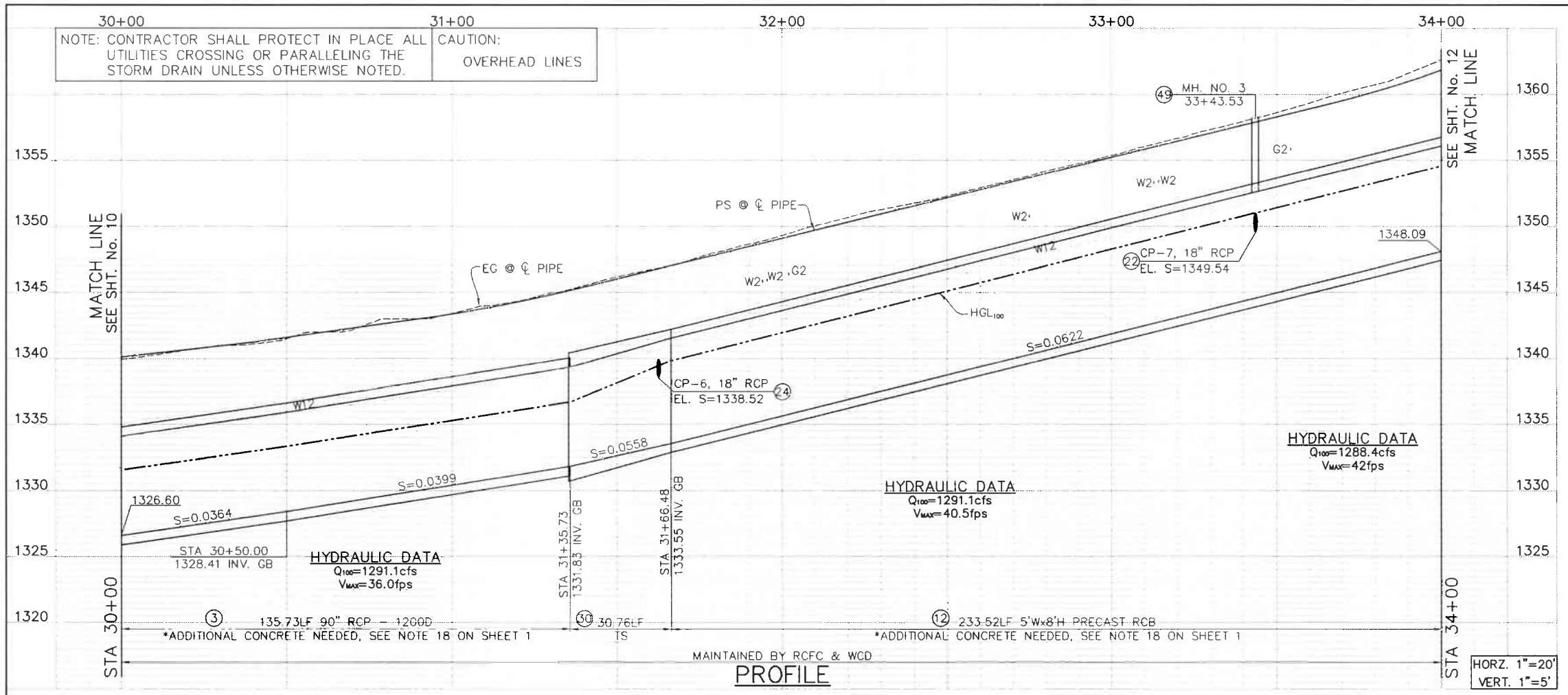

PROFILE

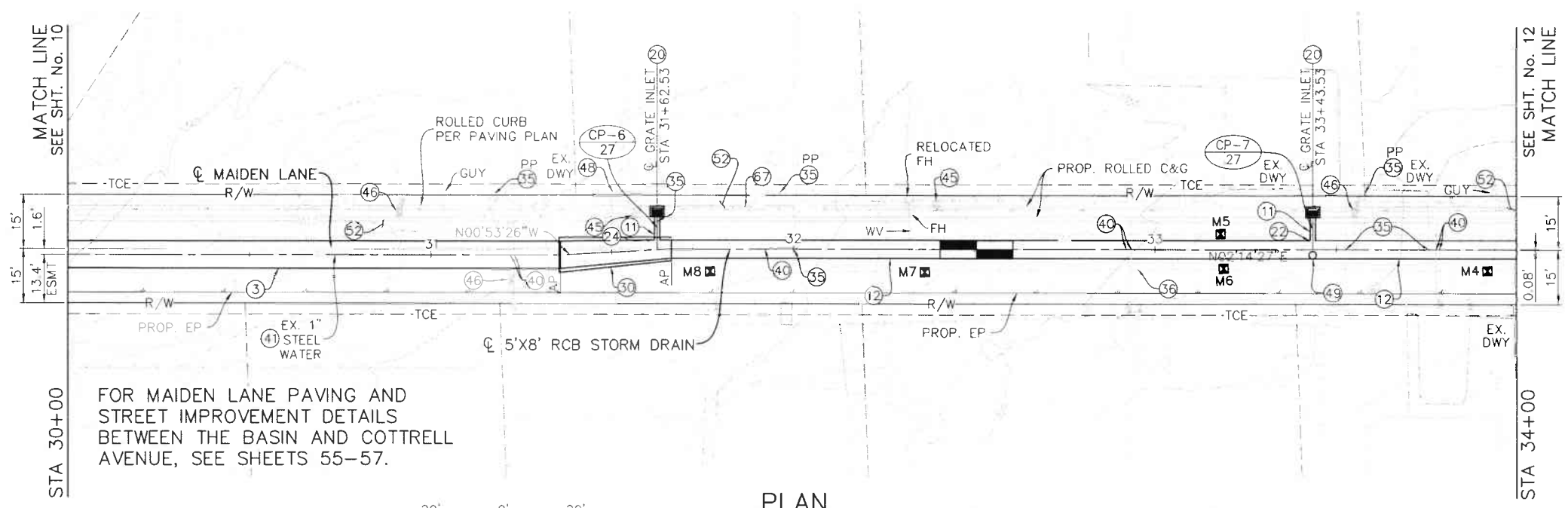

FOR MAIDEN LANE PAVING AND STREET IMPROVEMENT DETAILS BETWEEN THE BASIN AND COTTRELL AVENUE, SEE SHEETS 55-57.

SCALE 1"=20'

PLAN

FOR MAIDEN LANE WATER LINE REPLACEMENT AND HOUSE WATER LATERAL AND METER RECONSTRUCTION, SEE LINE H WATER IMPROVEMENT PLAN, SHEETS W1-W3.

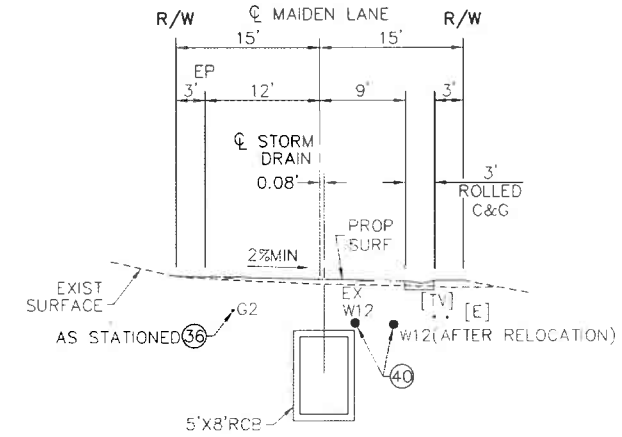

SECTION AT STA 32+50

TYPICAL FROM STA 31+24.67 TO STA 34+00

SCALE 1"=10'

LEGEND

- B-X = SOIL BORING LOCATION
- PHX = POTHOLE LOCATION MARCH 2018
- PHX = MARKED FOR POTHOLE, NOTHING FOUND
- PHX = POTHOLE LOCATION JULY 2018
- PHX = MARKED FOR POTHOLE, NOTHING FOUND
- MX = POTHOLE LOCATION JUNE 2020
- CP-6 / 27 = CONNECTOR PIPE NUMBER / REFERENCE SHEET NUMBER

CONSTRUCTION NOTES

(3) CONSTRUCT 90" RCP

(11) CONSTRUCT 18" RCP

(12) INSTALL PRECAST 5'Wx8'H RCB PER CALTRANS STD. D83A & D83B (USE S=8' & H=8' FOR CONCRETE THICKNESS & REBAR)

(20) CONSTRUCT DRAINAGE INLET TYPE "G6" PER CALTRANS STD. D73B WITH TYPE "18-10" BICYCLE & PEDESTRIAN PROOF GRATE PER CALTRANS STD. D77B

(22) CONSTRUCT JS NO.3 PER RCFC&WCD STD. JS228

(24) CONSTRUCT JS NO.4 PER RCFC&WCD STD. JS229

(30) CONSTRUCT TS NO.1 PER RCFC&WCD STD. TS301

(35) PROTECT IN PLACE

(36) EXISTING 2" GAS LINE (PROTECT IN PLACE)

(40) RELOCATE WATER (SIZE PER PLAN) PER WATER IMPROVEMENT PLAN ON SHEETS W1-W5

(41) VERIFY PLOTTED UTILITY IS IN THIS LOCATION, IF FOUND, VERIFY IF ABANDONED & REMOVE AS NEEDED

(45) REMOVE & RELOCATE INTERFERING MAILBOX

(46) REMOVE & RELOCATE INTERFERING WATER METER PER SHEETS W1-W5 OF WATER IMPROVEMENT PLANS

(48) STRUCTURE TO BE SALVAGED OR REPLACED IN KIND

(49) CONSTRUCT MANHOLE NO.3 PER RCFC&WCD STD. MH253

(52) REMOVE INTERFERING PORTIONS OF VEGETATION WITHIN RIGHT-OF-WAY

(67) FENCE TO BE SALVAGED OR REPLACED IN KIND BEHIND RIGHT-OF-WAY

MANHOLE / JUNCTION STRUCTURE DATA

LATERAL	℄ STATION	WALL STATION	STRUCTURE	A	B	C	D_1	D_2	ELEV S	ELEV R
LINE H	31+51.11	–	TS NO.1	–	–	–	–	90"	–	–
CP-6	31+62.53	31+62.53	JS NO.4	90°	18"	–	–	–	1338.52	–
LINE H	33+43.53	–	MH NO.3	–	–	–	–	–	–	–
CP-7	33+43.53	33+43.53	JS NO.3	90°	18"	–	–	–	1349.54	–

CONSTRUCTION DRAWING SET DATED 22 JUNE, 2021

K&A Engineering, Inc.
ENGINEERING LAND PLANNING SURVEYING
357 N. SHERIDAN STREET SUITE 117 CORONA, CALIFORNIA 92880 TEL. (951) 279-1800 FAX (951) 279-4380

REGISTERED PROFESSIONAL ENGINEER DONALD W. BERGH No. 28949 CIVIL STATE OF CALIFORNIA

ENGINEER R.C.E. 28949 DATE: 8/16/2021

COUNTY FILE No. 970-B

COUNTY OF RIVERSIDE TRANSPORTATION DEPARTMENT

RECMD COUNTY OVERSIGHT ENGINEER 8/11/21

APPROVES AS TO COMPLIANCE WITH APPLICABLE COUNTY STANDARDS AND PRACTICES.

REGISTRATION # 76450 DATE SIGNED

Don't Dig...Until You Call U.S.A. Toll Free DIAL 811 for the location of buried utility lines. Don't disrupt vital services.

TWO WORKING DAYS BEFORE YOU DIG

BENCH MARK
NAD83 Epoch 2011, CCS83, ZONE 6-NAVD88(COHB8)
RCFC B.M. Z 15502
SET MAG NAIL W/ RCFC WCD TAG FLUSH
E 6,226,565.52 N 2,177,350.50
ELEV.: 1,401.46 SURVEY DATE: 02/2013

REF.	REVISIONS	APPR.	DATE

RIVERSIDE COUNTY FLOOD CONTROL AND WATER CONSERVATION DISTRICT

DESIGNED BY: K&A ENGINEERING
DRAWN BY: ADA
DATE DRAWN: JUNE 2021
P8 NUMBER: 226078

RECOMMENDED FOR APPROVAL BY: DATE: 7-27-2021

APPROVED BY: DATE: 8/4/2021

LAKELAND VILLAGE MDP STORM DRAIN

LINE H

STA 30+00 TO 34+00

PROJECT NO. 3-0-00020

DRAWING NO. 3-0207

SHEET NO. 11 OF 65

NOTE: CONTRACTOR SHALL PROTECT IN PLACE ALL UTILITIES CROSSING OR PARALLELING THE STORM DRAIN UNLESS OTHERWISE NOTED.

CAUTION: OVERHEAD LINES

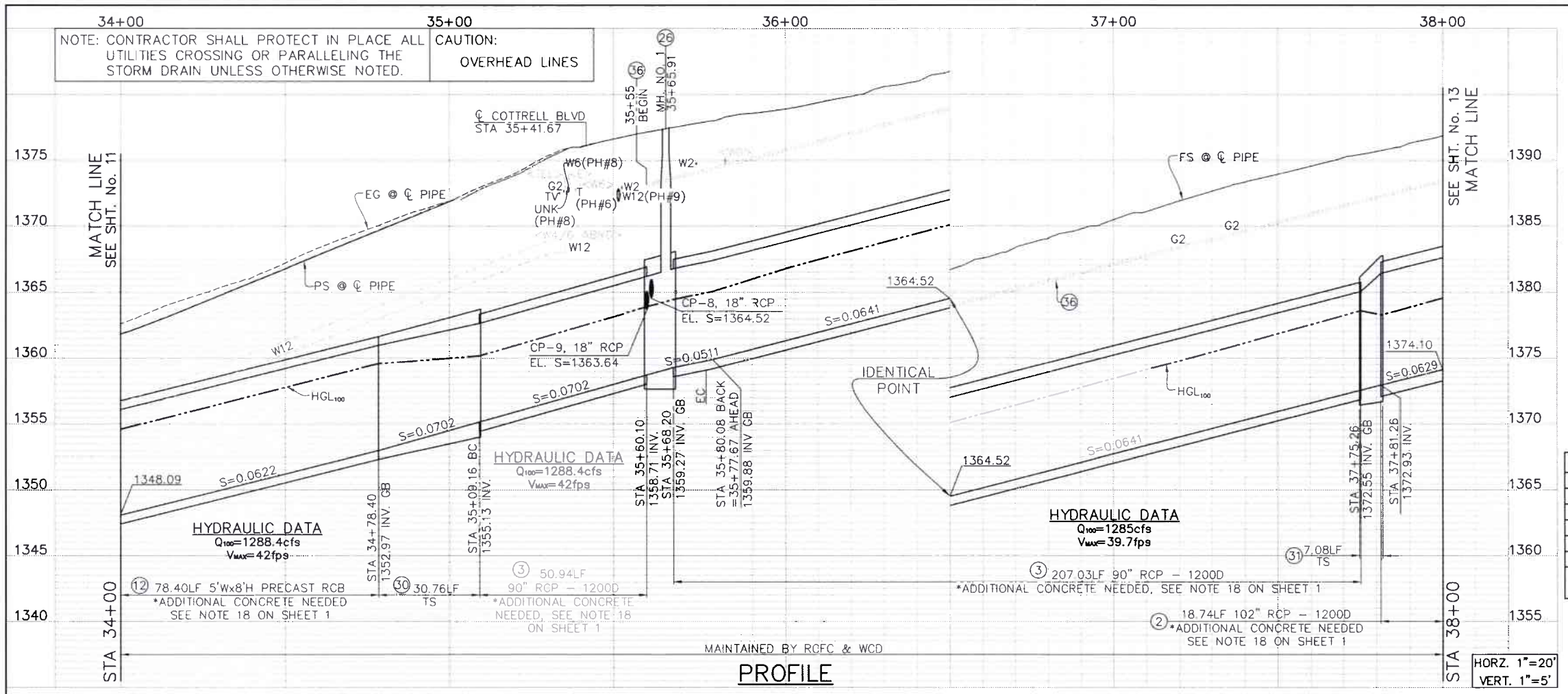

PROFILE

HORZ. 1"=20'
VERT. 1"=5'

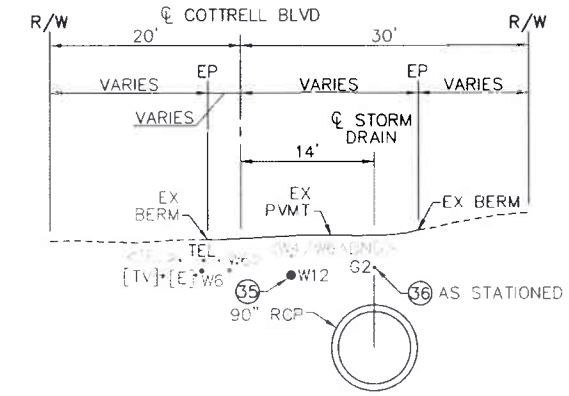

SECTION AT STA 37+00

TYPICAL FROM STA 35+77.67 TO STA 37+75.26

10' 0' 10'
SCALE 1"=10'

CURVE DATA		(A)
R		45.0'
Δ		87°47'39"
L		68.95'
T		43.30'
B.C.		STA 35+09.16
E.C.		STA 35+78.14
P.I.	NORTHING	2177355.964
	EASTING	6226979.933

LEGEND

- B-X = SOIL BORING LOCATION
- PHX = POTHOLE LOCATION MARCH 2018
- PHX = MARKED FOR POTHOLE, NOTHING FOUND
- PHX = POTHOLE LOCATION JULY 2018
- PHX = MARKED FOR POTHOLE, NOTHING FOUND
- MX = POTHOLE LOCATION JUNE 2020
- CP-6 / 27 = CONNECTOR PIPE NUMBER / REFERENCE SHEET NUMBER

CONSTRUCTION NOTES

(2) CONSTRUCT 102" RCP
(3) CONSTRUCT 90" RCP
(11) CONSTRUCT 18" RCP
(12) INSTALL PRECAST 5'Wx8'H RCB PER CALTRANS STD. D83A & D83B (USE S=8' & H=8' FOR CONCRETE THICKNESS & REBAR)
(16) CONSTRUCT CATCH BASIN NO.1 PER RCFC&WCD STD. CB100
(17) CONSTRUCT LOCAL DEPRESSION NO.2 PER RCFC&WCD STD. LD201
(26) CONSTRUCT MANHOLE NO.2 PER RCFC&WCD STD. MH252
(30) CONSTRUCT TS NO.1 PER RCFC&WCD STD. TS301
(31) CONSTRUCT TS NO.3 PER RCFC&WCD STD. TS303
(35) PROTECT IN PLACE
(36) EXISTING 2" GAS LINE (PROTECT IN PLACE)
(40) RELOCATE WATER (SIZE PER PLAN) PER WATER IMPROVEMENT PLAN ON SHEETS W1-W5
(41) VERIFY PLOTTED UTILITY IS IN THIS LOCATION, IF FOUND, VERIFY IF ABANDONED & REMOVE AS NEEDED
(45) REMOVE & RELOCATE INTERFERING MAILBOX
(46) REMOVE & RELOCATE INTERFERING WATER METER PER SHEETS W1-W5 OF WATER IMPROVEMENT PLANS
(47) FENCE TO BE SALVAGED OR REPLACED IN KIND (SEE NOTE ON PLAN)
(52) REMOVE INTERFERING PORTIONS OF VEGETATION WITHIN RIGHT-OF-WAY
(56) REMOVE & RELOCATE GARDEN FEATURES AS REQUIRED FOR CONSTRUCTION
(69) EXISTING GAS LINE TO BE RELOCATED BY OTHERS PRIOR TO CONSTRUCTION

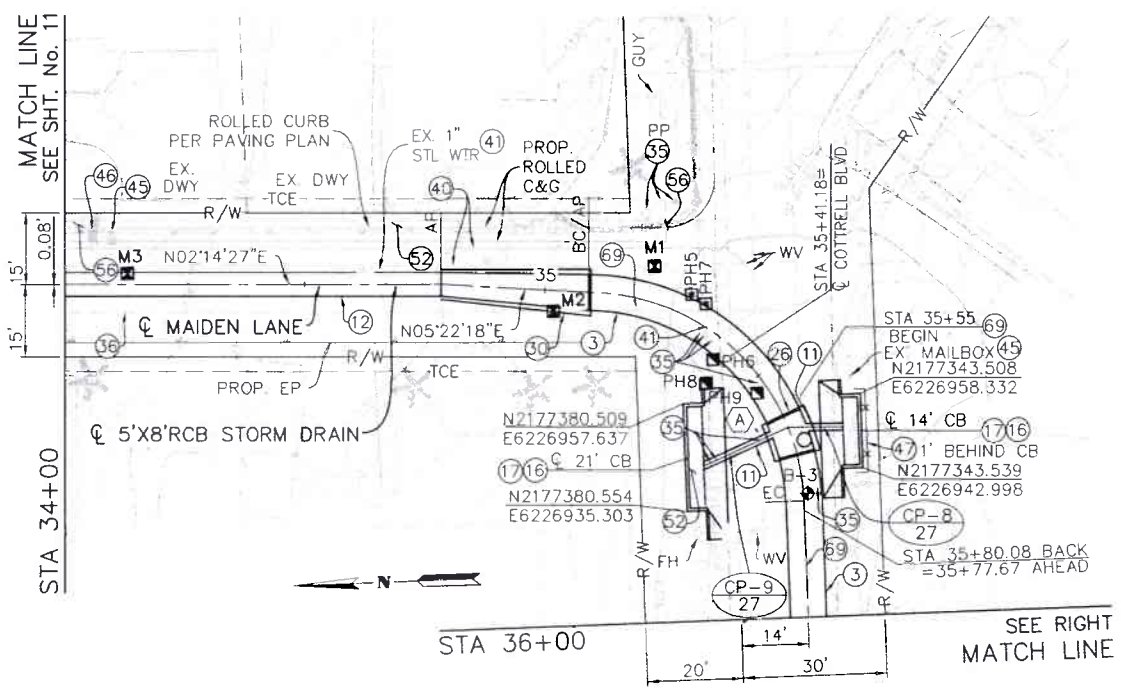

PLAN

20' 0' 20'
SCALE 1"=20'

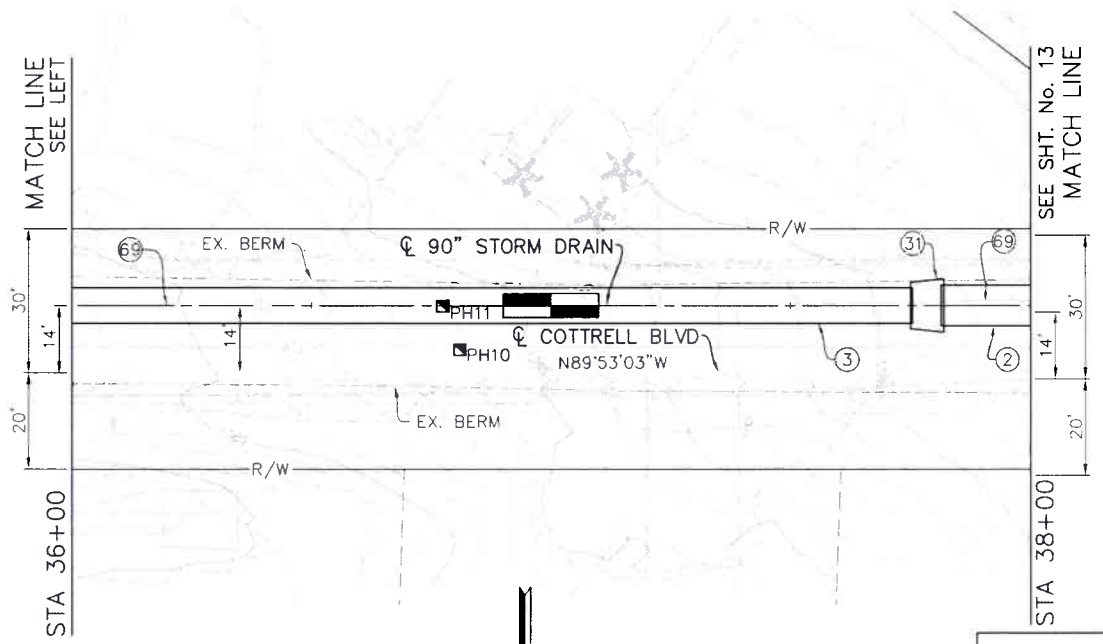

MANHOLE / JUNCTION STRUCTURE DATA										
LATERAL	℄ STATION	WALL STATION	STRUCTURE	A	B	C	D_1	D_2	ELEV S	ELEV R
LINE H	34+93.78	–	TS NO.1	–	–	–	90"	–	–	–
CP-8	35+62.41	35+63.75	MH NO. 2	68'36'	18"	–	90"	90"	1364.52	–
CP-9	35+62.41	35+62.57	MH NO. 2	87'45'36"	18"	–	90"	90"	1363.64	–
LINE H	37+75.26	–	TS NO. 3	–	–	–	102"	90"	–	–

CONSTRUCTION DRAWING SET DATED 22 JUNE, 2021

K&A Engineering, Inc.
ENGINEERING LAND PLANNING SURVEYING
357 N. SHERIDAN STREET SUITE 117 CORONA, CALIFORNIA 92880 TEL. (951) 279-1800 FAX (951) 279-4380

REGISTERED PROFESSIONAL ENGINEER DONALD W. BEACH No. 28949 CIVIL STATE OF CALIFORNIA

Donald Beach 8/16/2021
ENGINEER R.C.E. 28949 DATE:

COUNTY FILE No. 970-B
COUNTY OF RIVERSIDE TRANSPORTATION DEPARTMENT
RECMD COUNTY OVERSIGHT ENGINEER 8/11/21
APPROVES AS TO COMPLIANCE WITH APPLICABLE COUNTY STANDARDS AND PRACTICES.
REGISTRATION # 76450 DATE SIGNED

Don't Dig...Until You Call U.S.A. Toll Free DIAL 811 for the location of buried utility lines. Don't disrupt vital services.
TWO WORKING DAYS BEFORE YOU DIG

BENCH MARK
NAD83 Epoch 2011, CCS83, ZONE 6- NAVD88(COH88)
RCFC B.M. Z 15502
SET MAG NAIL W/ RCFC WCD TAG FLUSH
E 6,226,565.52 N 2,177,350.50
ELEV.: 1,401.46 SURVEY DATE. 02/2013

REVISIONS			
REF	DESCRIPTION	APPR.	DATE

RIVERSIDE COUNTY FLOOD CONTROL AND WATER CONSERVATION DISTRICT
DESIGNED BY: K&A ENGINEERING
DRAWN BY: ADA
DATE DRAWN: JUNE 2021
P8 NUMBER: 226078
RECOMMENDED FOR APPROVAL BY: Edward H. Quagliotti DATE 7-27-2021
APPROVED BY: DATE 8/4/2021

LAKELAND VILLAGE MDP
STORM DRAIN
LINE H
STA 34+00 TO 38+00

PROJECT NO. 3-0-00020
DRAWING NO. 3-0207
SHEET NO. 12 OF 65

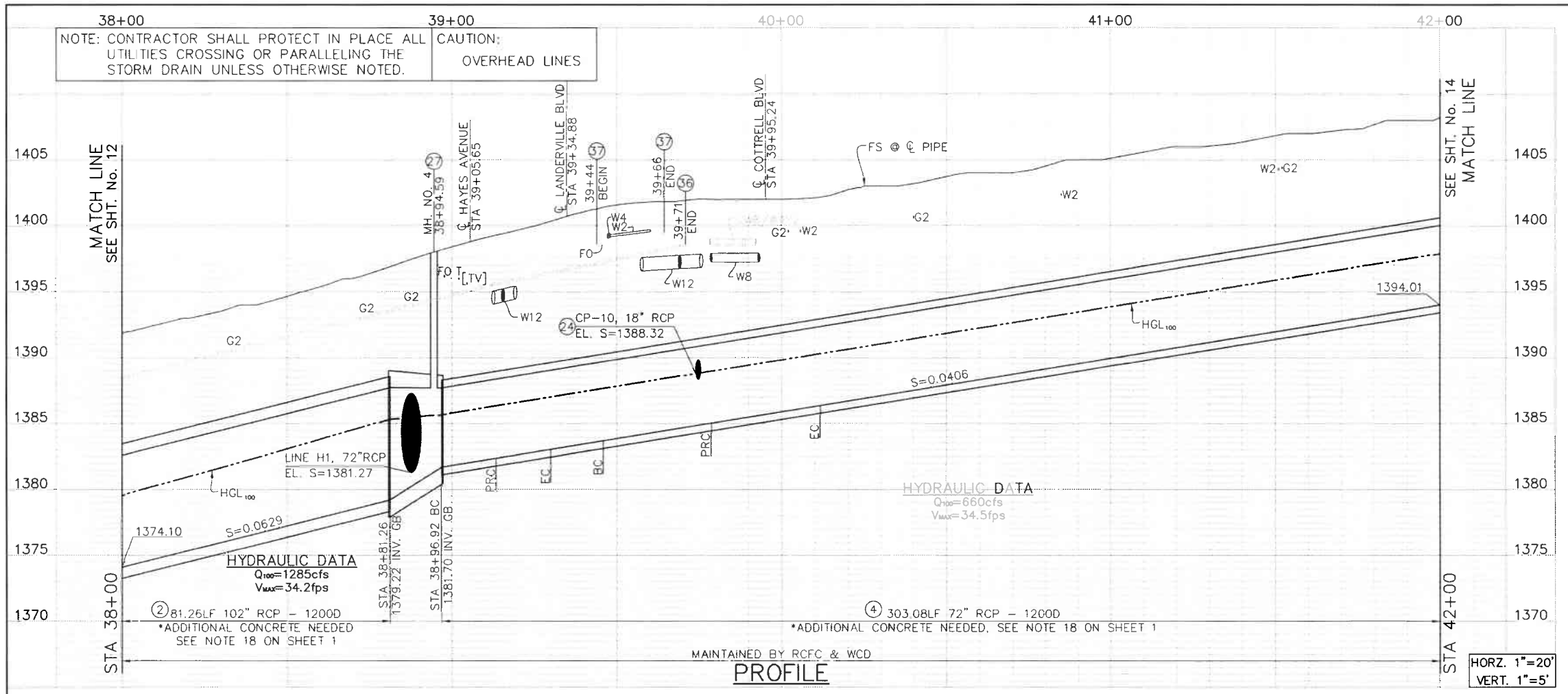

PROFILE

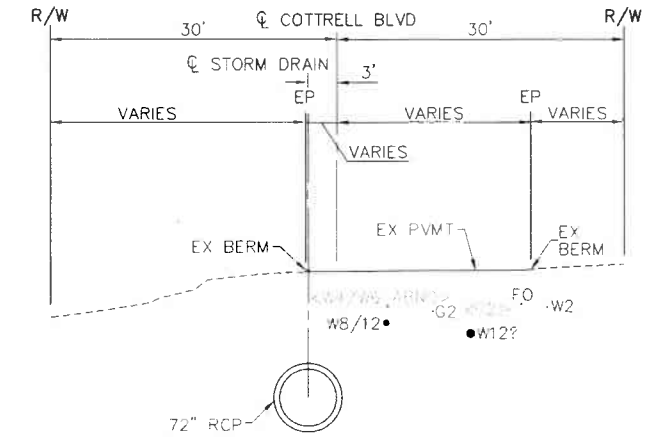

SECTION AT STA 40+50

TYPICAL FROM STA 40+11.77 TO STA 42+00

10' 0' 10'

SCALE 1"=10'

LEGEND

- B-X = SOIL BORING LOCATION
- PHX = POTHOLE LOCATION MARCH 2018
- PHX = MARKED FOR POTHOLE, NOTHING FOUND
- PHX = POTHOLE LOCATION JULY 2018
- PHX = MARKED FOR POTHOLE, NOTHING FOUND
- MX = POTHOLE LOCATION JUNE 2020
- CP-6 / 27 = CONNECTOR PIPE NUMBER / REFERENCE SHEET NUMBER

CURVE DATA		(A)	(B)	(C)	(D)
R		45'	45'	45'	45'
Δ		21°02'22"	21°02'22"	41°53'19"	41°53'19"
L		16.52'	16.52'	32.90'	32.90'
T		8.36'	8.36'	17.22'	17.22'
B.C.		STA 38+96.92	STA 39+13.44	STA 39+45.97	STA 39+78.87
E.C.		STA 39+13.44	STA 39+29.97	STA 39+78.87	STA 40+11.77
P.I.	NORTHING	2177356.717	2177350.749	2177350.833	2177373.885
	EASTING	6226607.007	6226591.396	6226549.816	6226524.219

MANHOLE / JUNCTION STRUCTURE DATA										
LATERAL	℄ STATION	WALL STATION	STRUCTURE	A	B	C	D_1	D_2	ELEV S	ELEV R
LINE H1	38+81.50	38+87.94	MH NO.4	30'	72"	15.9'	72"	102"	1381.27	1382.25
CP-10	39+72.78	39+75	JS NO. 4	55°46'3"	18"	–	–	–	1388.32	–

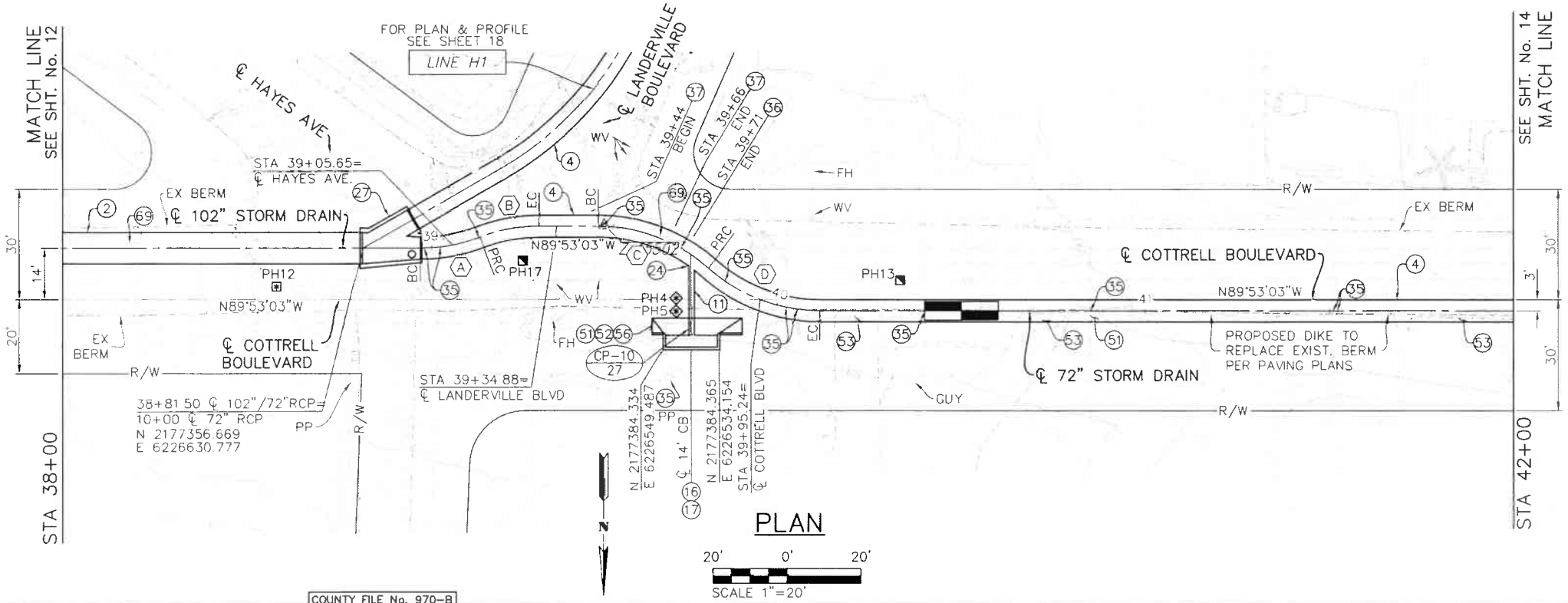

PLAN

20' 0' 20'

SCALE 1"=20'

CONSTRUCTION NOTES

(2) CONSTRUCT 102" RCP
(4) CONSTRUCT 72" RCP
(11) CONSTRUCT 18" RCP
(16) CONSTRUCT CATCH BASIN NO.1 PER RCFC&WCD STD. CB100
(17) CONSTRUCT LOCAL DEPRESSION NO.2 PER RCFC&WCD STD. LD201
(24) CONSTRUCT JS NO.4 PER RCFC&WCD STD. JS229
(27) CONSTRUCT MANHOLE NO.4 PER RCFC&WCD STD. MH254
(35) PROTECT IN PLACE
(37) FIBER OPTIC TO BE RELOCATED BY FRONTIER PRIOR TO CONSTRUCTION
(51) TRIM OR REMOVE INTERFERING PORTION OF TREE WITHIN RIGHT-OF-WAY
(52) REMOVE INTERFERING PORTIONS OF VEGETATION WITHIN RIGHT-OF-WAY
(53) REMOVE, LEGALLY DISPOSE OF & RECONSTRUCT INTERFERING PORTIONS OF DRIVEWAY PER PAVING PLAN
(56) REMOVE & RELOCATE GARDEN FEATURES AS REQUIRED FOR CONSTRUCTION
(69) EXISTING GAS LINE TO BE RELOCATED BY OTHERS PRIOR TO CONSTRUCTION

CONSTRUCTION DRAWING SET DATED 22 JUNE, 2021

K&A Engineering, Inc.
ENGINEERING
LAND PLANNING
SURVEYING
357 N. SHERIDAN STREET
SUITE 117
CORONA, CALIFORNIA 92880
TEL (951) 279-1800
FAX (951) 279-4380

REGISTERED PROFESSIONAL ENGINEER DONALD BERGH No. 28949 CIVIL STATE OF CALIFORNIA

Donald Bergh 8/16/2021
ENGINEER R.C.E. 28949 DATE:

COUNTY FILE No. 970-B

COUNTY OF RIVERSIDE TRANSPORTATION DEPARTMENT

RECMD COUNTY OVERSIGHT ENGINEER 8/4/21
APPROVES AS TO COMPLIANCE WITH APPLICABLE COUNTY STANDARDS AND PRACTICES.
REGISTRATION # 76450 DATE SIGNED

Don't Dig...Until You Call U.S.A. Toll Free DIAL 811 for the location of buried utility lines. Don't disrupt vital services.
TWO WORKING DAYS BEFORE YOU DIG

BENCH MARK
NAD83 Epoch 2011, CCS83, ZONE 6-NAVD88(COH88)
RCFC B.M. Z 15502
SET MAG NAIL W/ RCFC WCD TAG FLUSH
E 6,226,565.52 N 2,177,350.50
ELEV.: 1,401.46 SURVEY DATE: 02/2013

REF.	REVISIONS DESCRIPTION	APPR	DATE

RIVERSIDE COUNTY FLOOD CONTROL AND WATER CONSERVATION DISTRICT

DESIGNED BY: K&A ENGINEERING
DRAWN BY: ADA
DATE DRAWN: JUNE 2021
P8 NUMBER: 226078
RECOMMENDED FOR APPROVAL BY: DATE 7-27-2021
APPROVED BY: DATE 8/4/2021

LAKELAND VILLAGE MDP STORM DRAIN

LINE H

STA 38+00 TO 42+00

PROJECT NO. 3-0-00020
DRAWING NO 3-0207
SHEET NO. 13 OF 65

NOTE: CONTRACTOR SHALL PROTECT IN PLACE ALL UTILITIES CROSSING OR PARALLELING THE STORM DRAIN UNLESS OTHERWISE NOTED.

CAUTION: OVERHEAD LINES

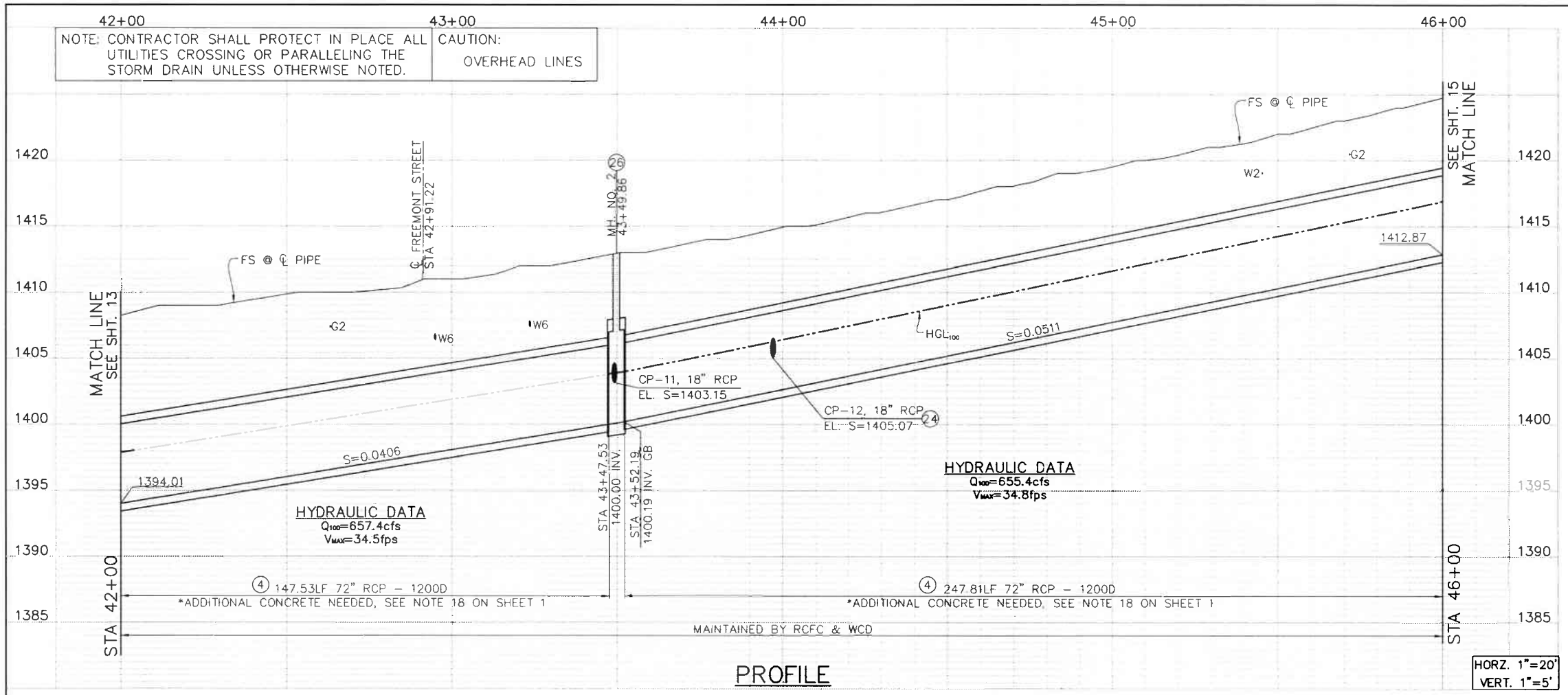

PROFILE

HORZ. 1"=20'
VERT. 1"=5'

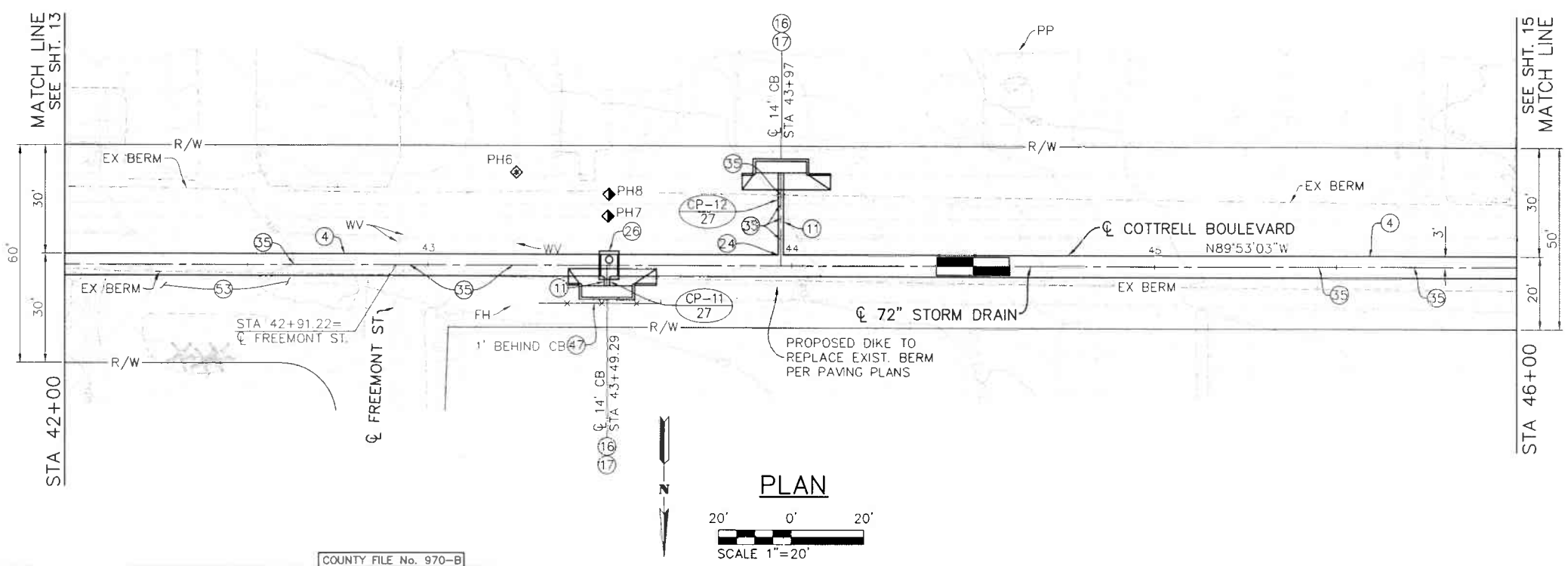

PLAN

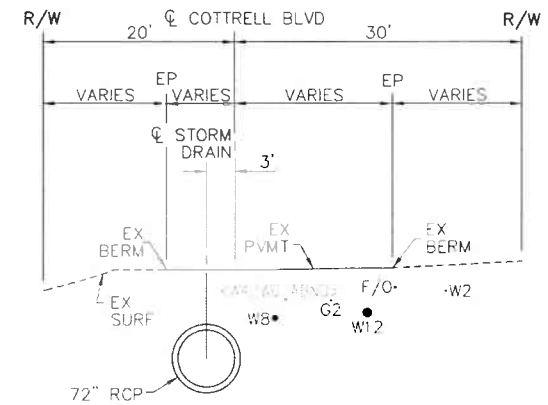

SECTION AT STA 44+50

TYPICAL FROM STA 43+05.60 TO STA 46+00

10' 0' 10'

SCALE 1"=10'

LEGEND

- B-X = SOIL BORING LOCATION
- PHX = POTHOLE LOCATION MARCH 2018
- PHX = MARKED FOR POTHOLE, NOTHING FOUND
- PHX = POTHOLE LOCATION JULY 2018
- PHX = MARKED FOR POTHOLE, NOTHING FOUND
- MX = POTHOLE LOCATION JUNE 2020
- (CP-6 / 27) = CONNECTOR PIPE NUMBER / REFERENCE SHEET NUMBER

MANHOLE / JUNCTION STRUCTURE DATA

LATERAL	℄ STATION	WALL STATION	STRUCTURE	A	B	C	D_1	D_2	ELEV S	ELEV R
CP-11	43+49.29	43+49.29	MH NO. 2	90°	18"	–	72"	72"	1404.98	–
CP-12	43+97	43+97	JS NO. 4	90°	18"	–	–	–	1405.07	–

CONSTRUCTION NOTES

(4) CONSTRUCT 72" RCP

(11) CONSTRUCT 18" RCP

(16) CONSTRUCT CATCH BASIN NO.1 PER RCFC&WCD STD. CB100

(17) CONSTRUCT LOCAL DEPRESSION NO.2 PER RCFC&WCD STD. LD201

(24) CONSTRUCT JS NO.4 PER RCFC&WCD STD. JS229

(26) CONSTRUCT MANHOLE NO.2 PER RCFC&WCD STD. MH252

(35) PROTECT IN PLACE

(47) FENCE TO BE SALVAGED OR REPLACED IN KIND (SEE NOTE ON PLAN)

(53) REMOVE, LEGALLY DISPOSE OF & RECONSTRUCT INTERFERING PORTIONS OF DRIVEWAY PER PAVING PLAN

CONSTRUCTION DRAWING SET DATED 22 JUNE, 2021

K&A Engineering, Inc.
ENGINEERING
LAND PLANNING
SURVEYING
357 N. SHERIDAN STREET
SUITE 117
CORONA, CALIFORNIA 92880
TEL (951) 279-1800
FAX (951) 279-4380

REGISTERED PROFESSIONAL ENGINEER DONALD W. BERGH No. 28949 CIVIL STATE OF CALIFORNIA

Donald Bergh 8/16/2021

ENGINEER R.C.E 28949 DATE:

COUNTY FILE No. 970-B

COUNTY OF RIVERSIDE TRANSPORTATION DEPARTMENT

RECMD. COUNTY OVERSIGHT ENGINEER 8/11/21

APPROVES AS TO COMPLIANCE WITH APPLICABLE COUNTY STANDARDS AND PRACTICES.

REGISTRATION # 76450 DATE SIGNED

Don't Dig...Until You Call U.S.A. Toll Free DIAL 811 for the location of buried utility lines. Don't disrupt vital services.

TWO WORKING DAYS BEFORE YOU DIG

BENCH MARK
NAD83 Epoch 2011, CCS83, ZONE 6-NAVD88(CGH88)
RCFC B.M. Z 15502
SET MAG NAIL W/ RCFC WCD TAG FLUSH
E 6,226,565.52 N 2,177,350.50
ELEV.: 1,401.46 SURVEY DATE: 02/2013

REF.	REVISIONS	APPR	DATE

RIVERSIDE COUNTY FLOOD CONTROL AND WATER CONSERVATION DISTRICT

DESIGNED BY: K&A ENGINEERING
DRAWN BY: ADA
DATE DRAWN: JUNE 2021
PB NUMBER: 226078

RECOMMENDED FOR APPROVAL BY: DATE 7-27-2021

APPROVED BY: DATE 8/4/2021

LAKELAND VILLAGE MDP STORM DRAIN

LINE H

STA 42+00 TO 46+00

PROJECT NO. 3-0-00020

DRAWING NO. 3-0207

SHEET NO. 14 OF 65

NOTE: CONTRACTOR SHALL PROTECT IN PLACE ALL UTILITIES CROSSING OR PARALLELING THE STORM DRAIN UNLESS OTHERWISE NOTED.

CAUTION: OVERHEAD LINES

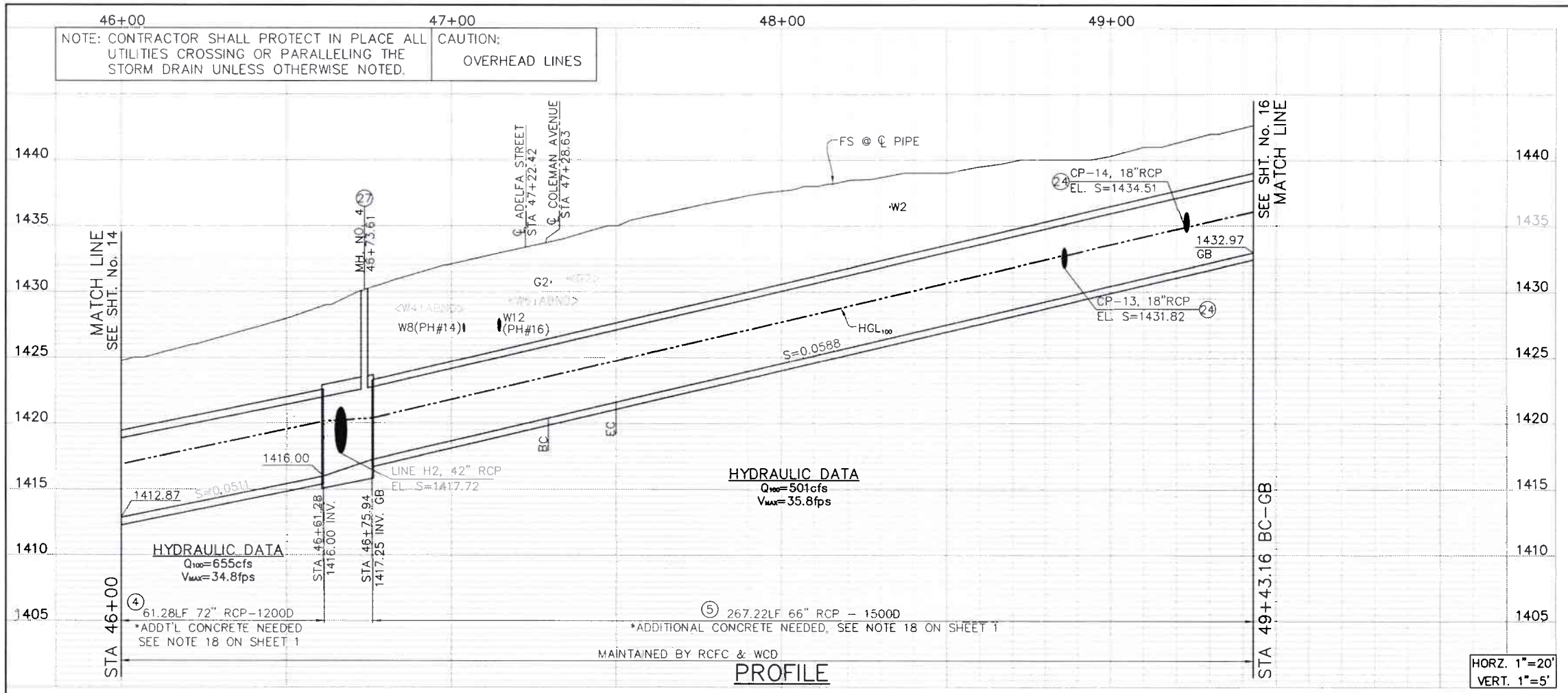

PROFILE

HORZ. 1"=20'
VERT. 1"=5'

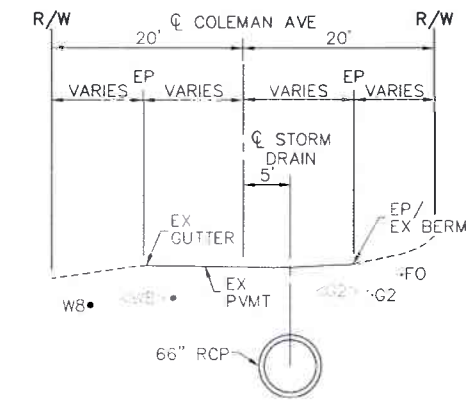

SECTION AT STA 48+00

TYPICAL FROM STA 47+50.06 TO STA 49+43.16

10' 0' 10'

SCALE 1"=10'

CURVE DATA		(A)
R		45.0'
Δ		26°11'50"
L		20.58'
T		10.47'
B.C.		STA 47+29.48
E.C.		STA 47+50.06
P.I	NORTHING	2177375.39
	EASTING	6225778.811

LEGEND

- B-X = SOIL BORING LOCATION
- PHX = POTHOLE LOCATION MARCH 2018
- PHX = MARKED FOR POTHOLE, NOTHING FOUND
- PHX = POTHOLE LOCATION JULY 2018
- PHX = MARKED FOR POTHOLE, NOTHING FOUND
- MX = POTHOLE LOCATION JUNE 2020
- CP-6 / 27 = CONNECTOR PIPE NUMBER / REFERENCE SHEET NUMBER

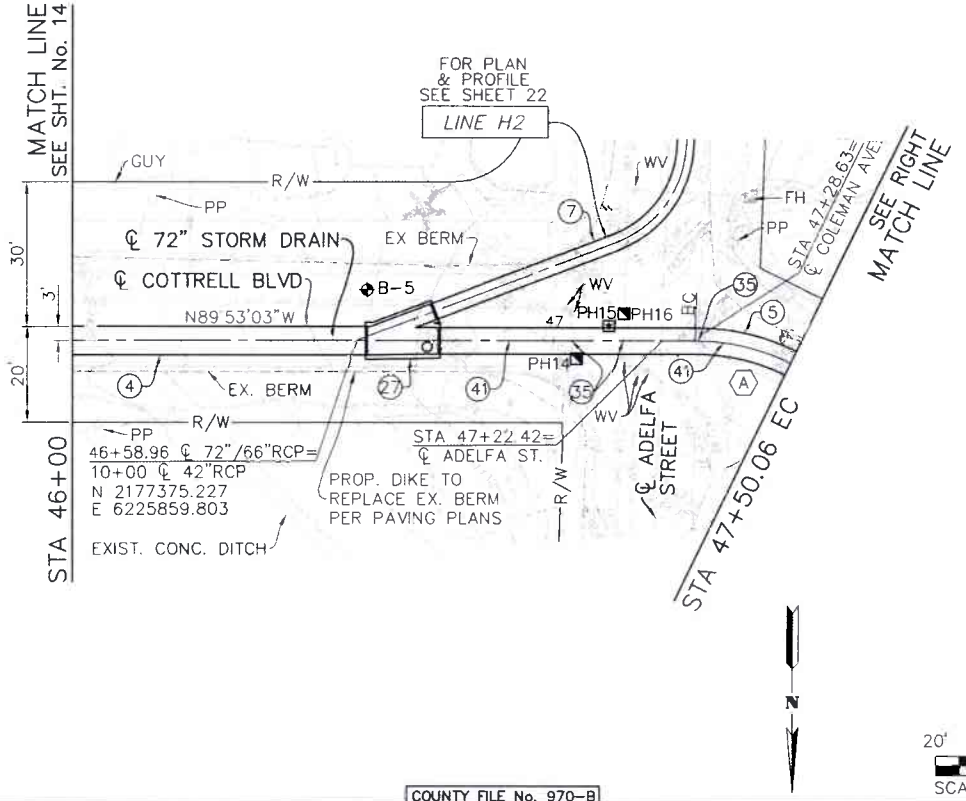

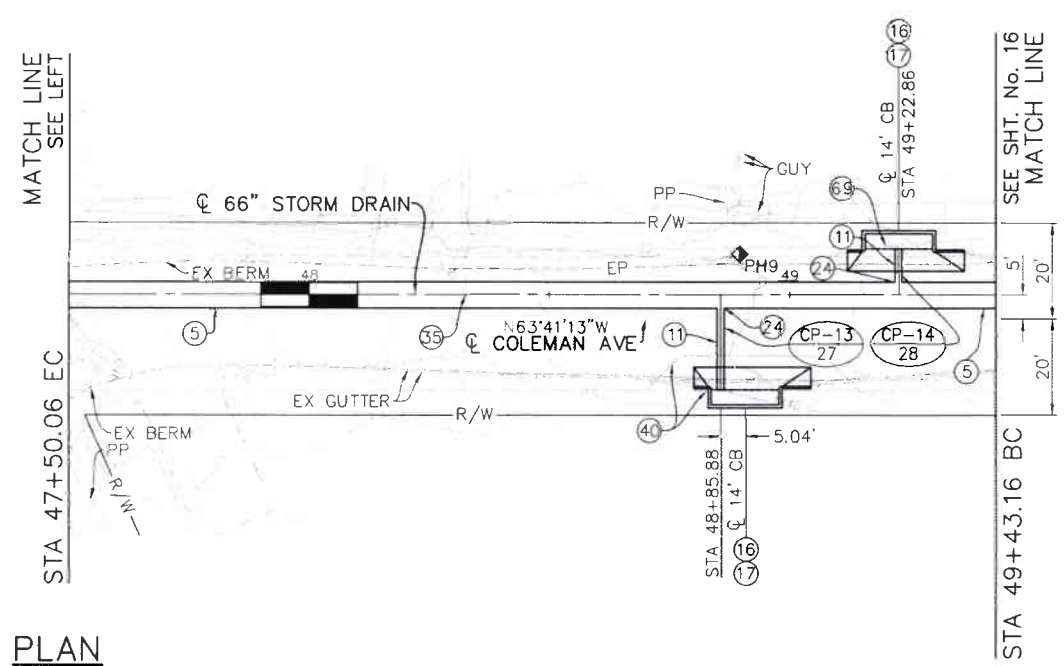

PLAN

20' 0' 20'

SCALE 1"=20'

CONSTRUCTION NOTES

(4) CONSTRUCT 72" RCP

(5) CONSTRUCT 66" RCP

(7) CONSTRUCT 42" RCP

(11) CONSTRUCT 18" RCP

(16) CONSTRUCT CATCH BASIN NO.1 PER RCFC&WCD STD. CB100

(17) CONSTRUCT LOCAL DEPRESSION NO.2 PER RCFC&WCD STD. LD201

(24) CONSTRUCT JS NO.4 PER RCFC&WCD STD. JS229

(27) CONSTRUCT MANHOLE NO.4 PER RCFC&WCD STD. MH254

(35) PROTECT IN PLACE

(40) RELOCATE WATER (SIZE PER PLAN) PER WATER IMPROVEMENT PLAN ON SHEETS W1-W5

(41) VERIFY PLOTTED UTILITY IS IN THIS LOCATION, IF FOUND, VERIFY IF ABANDONED & REMOVE AS NEEDED

(69) EXISTING GAS LINE TO BE RELOCATED BY OTHERS PRIOR TO CONSTRUCTION

MANHOLE / JUNCTION STRUCTURE DATA

LATERAL	℄ STATION	WALL STATION	STRUCTURE	A	B	C	D	D	ELEV S	ELEV R
LINE H2	46+58.96	46+66.60	MH NO.4	20°51'23"	42"	17.5'	66"	72"	1417.72	1418.17
CP-13	48+35.88	48+85.88	JS NO. 4	90°	18"	–	66"	66"	1431.82	–
CP-14	49+22.86	49+22.86	JS NO. 4	90°	18"	–	66"	66"	1434.51	–

CONSTRUCTION DRAWING SET DATED 22 JUNE, 2021

K&A Engineering, Inc.
ENGINEERING LAND PLANNING SURVEYING
357 N. SHERIDAN STREET SUITE 117
CORONA, CALIFORNIA 92880
TEL (951) 279-1800
FAX (951) 279-4380

REGISTERED PROFESSIONAL ENGINEER DONALD W. BERGH No. 28949 CIVIL STATE OF CALIFORNIA

ENGINEER R.C.E. 28949 DATE: 8/16/2021

COUNTY FILE No. 970-B

COUNTY OF RIVERSIDE TRANSPORTATION DEPARTMENT

RECMD COUNTY OVERSIGHT ENGINEER 8/4/21

APPROVES AS TO COMPLIANCE WITH APPLICABLE COUNTY STANDARDS AND PRACTICES

REGISTRATION # 76450 DATE SIGNED

Don't Dig...Until You Call U.S.A. Toll Free DIAL 811 for the location of buried utility lines. Don't disrupt vital services.

TWO WORKING DAYS BEFORE YOU DIG

BENCH MARK
NAD83 Epoch 2011, CCS83, ZONE 6-NAVD88(COM88)
RCFC B.M. Z 15502
SET MAG NAIL W/ RCFC WCD TAG FLUSH
E 6,226,565.52 N 2,177,350.50
ELEV: 1,401.46 SURVEY DATE: 02/2013

REF.	DESCRIPTION	APPR.	DATE
	REVISIONS		

RIVERSIDE COUNTY FLOOD CONTROL AND WATER CONSERVATION DISTRICT

DESIGNED BY: K&A ENGINEERING
DRAWN BY: ADA
DATE DRAWN: JUNE 2021
P8 NUMBER: 226078

RECOMMENDED FOR APPROVAL BY: DATE 7-27-2021

APPROVED BY: DATE: 8/4/2021

LAKELAND VILLAGE MDP STORM DRAIN

LINE H

STA 46+00 TO 49+43.16

PROJECT NO. 3-0-00020

DRAWING NO. 3-0207

SHEET NO. 15 OF 65

NOTE: CONTRACTOR SHALL PROTECT IN PLACE ALL UTILITIES CROSSING OR PARALLELING THE STORM DRAIN UNLESS OTHERWISE NOTED.

CAUTION: OVERHEAD LINES

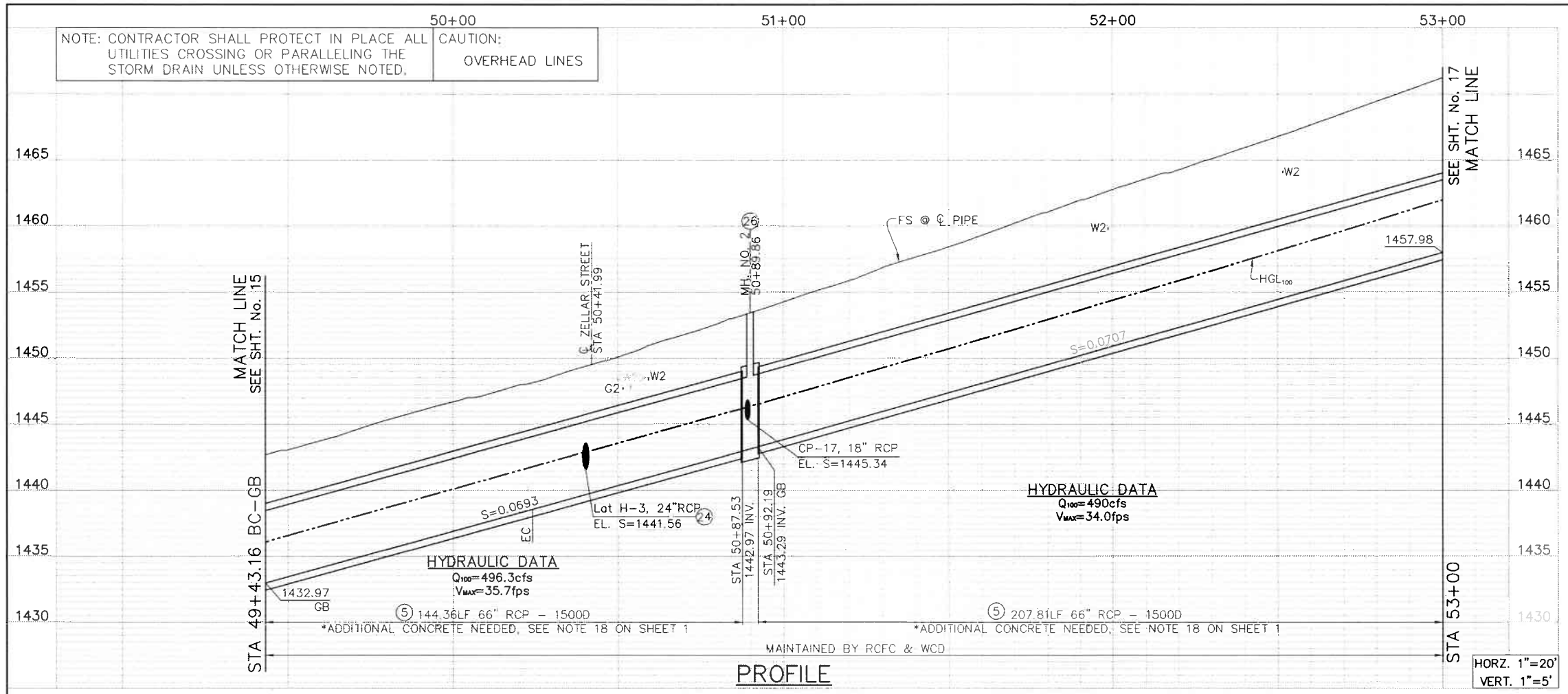

PROFILE

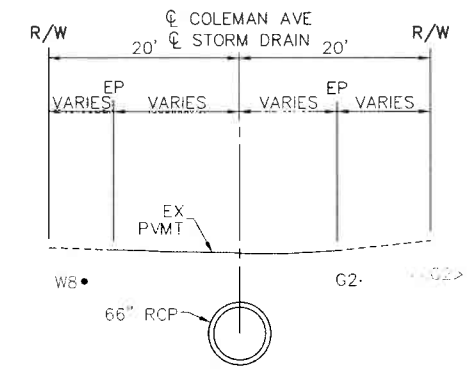

SECTION AT STA 51+50

TYPICAL FROM STA 50+23.99 TO STA 53+00

10' 0' 10'

SCALE 1"=10'

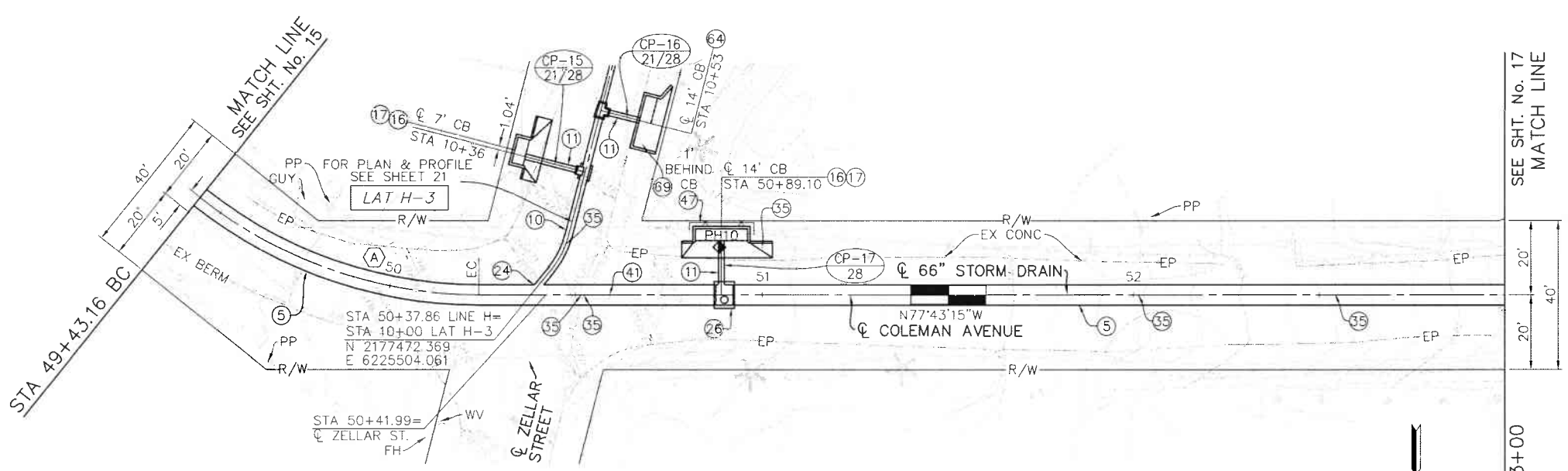

PLAN

20' 0' 20'

SCALE 1"=20'

CURVE DATA	(A)
R	120.0'
Δ	38°35'32"
L	80.83'
T	42.01'
B.C.	STA 49+43.16
E.C.	STA 50+23.99
P.I. NORTHING	2177484.254
P.I. EASTING	6225558.667

LEGEND

- B-X = SOIL BORING LOCATION
- PHX = POTHOLE LOCATION MARCH 2018
- PHX = MARKED FOR POTHOLE, NOTHING FOUND
- PHX = POTHOLE LOCATION JULY 2018
- PHX = MARKED FOR POTHOLE, NOTHING FOUND
- MX = POTHOLE LOCATION JUNE 2020
- CP-6 / 27 = CONNECTOR PIPE NUMBER / REFERENCE SHEET NUMBER

CONSTRUCTION NOTES

5. CONSTRUCT 66" RCP
10. CONSTRUCT 24" RCP
11. CONSTRUCT 18" RCP
16. CONSTRUCT CATCH BASIN NO.1 PER RCFC&WCD STD. CB100
17. CONSTRUCT LOCAL DEPRESSION NO.2 PER RCFC&WCD STD. LD201
24. CONSTRUCT JS NO.4 PER RCFC&WCD STD. JS229
26. CONSTRUCT MANHOLE NO.2 PER RCFC&WCD STD. MH252
35. PROTECT IN PLACE
41. VERIFY PLOTTED UTILITY IS IN THIS LOCATION, IF FOUND, VERIFY IF ABANDONED & REMOVE AS NEEDED
47. FENCE TO BE SALVAGED OR REPLACED IN KIND (SEE NOTE ON PLAN)
69. EXISTING GAS LINE TO BE RELOCATED BY OTHERS PRIOR TO CONSTRUCTION

CONSTRUCTION DRAWING SET DATED 22 JUNE, 2021

MANHOLE / JUNCTION STRUCTURE DATA

LATERAL	℄ STATION	WALL STATION	STRUCTURE	A	B	C	D_1	D_2	ELEV S	ELEV R
LAT H-3	50+37.86	50+40.17	JS NO. 4	50'	24"	–	66"	66"	1441.56	–
CP-17	50+89.10	50+89.10	MH NO. 2	90'	18"	–	66"	66"	1445.34	–

K&A Engineering, Inc.
ENGINEERING
LAND PLANNING
SURVEYING
357 N. SHERIDAN STREET
SUITE 117
CORONA, CALIFORNIA 92880
TEL. (951) 279-1800
FAX (951) 279-4380

REGISTERED PROFESSIONAL ENGINEER DONALD W. BERGH No. 28949 CIVIL STATE OF CALIFORNIA

ENGINEER R.C.E. 28949 DATE: 8/16/2021

COUNTY FILE No. 970-B

COUNTY OF RIVERSIDE
TRANSPORTATION DEPARTMENT

RECMD COUNTY OVERSIGHT ENGINEER 8/11/21

APPROVES AS TO COMPLIANCE WITH APPLICABLE COUNTY STANDARDS AND PRACTICES.

REGISTRATION # 76450 DATE SIGNED

Don't Dig...Until You Call U.S.A. Toll Free
DIAL 811
for the location of buried utility lines.
Don't disrupt vital services.
TWO WORKING DAYS BEFORE YOU DIG

BENCH MARK
NAD83 Epoch 2011, CCS83, ZONE 6-NAVD88(COH88)
RCFC B.M. Z 15502
SET MAG NAIL W/ RCFC WCD TAG FLUSH
E 6,226,565.52 N 2,177,350.50
ELEV.: 1,401.46 SURVEY DATE: 02/2013

REF.	DESCRIPTION	APPR.	DATE
	REVISIONS		

RIVERSIDE COUNTY FLOOD CONTROL AND WATER CONSERVATION DISTRICT

DESIGNED BY: K&A ENGINEERING
DRAWN BY: ADA
DATE DRAWN: JUNE 2021
PB NUMBER: 226078

RECOMMENDED FOR APPROVAL BY: DATE 7-27-2021
APPROVED BY: DATE 8/4/2021

LAKELAND VILLAGE MDP
STORM DRAIN

LINE H
STA 49+43.16 TO 53+00

PROJECT NO. 3-0-00020
DRAWING NO. 3-0207
SHEET NO. 16 OF 65

NOTE: CONTRACTOR SHALL PROTECT IN PLACE ALL UTILITIES CROSSING OR PARALLELING THE STORM DRAIN UNLESS OTHERWISE NOTED.

CAUTION: OVERHEAD LINES

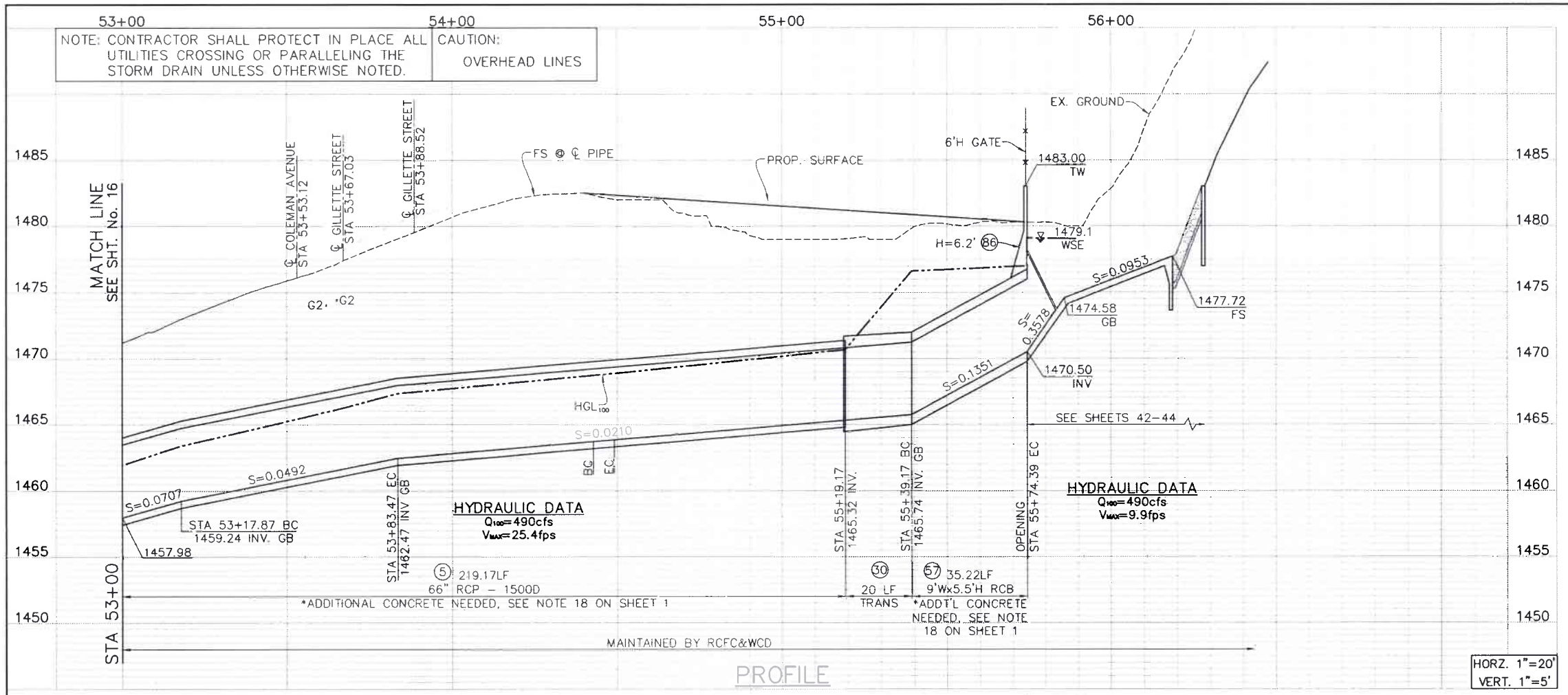

PROFILE

HORZ. 1"=20'
VERT. 1"=5'

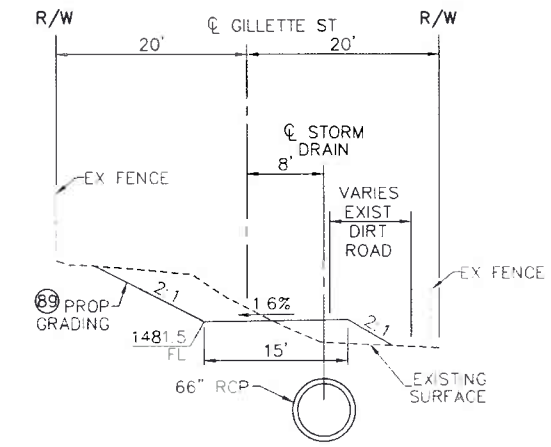

SECTION AT STA 55+00
NOT TYPICAL

10' 0' 10'
SCALE 1"=10'

LEGEND

- B-X = SOIL BORING LOCATION
- PHX = POTHOLE LOCATION MARCH 2018
- PHX = MARKED FOR POTHOLE, NOTHING FOUND
- PHX = POTHOLE LOCATION JULY 2018
- PHX = MARKED FOR POTHOLE, NOTHING FOUND
- MX = POTHOLE LOCATION JUNE 2020
- (CP-6 / 27) = CONNECTOR PIPE NUMBER / REFERENCE SHEET NUMBER

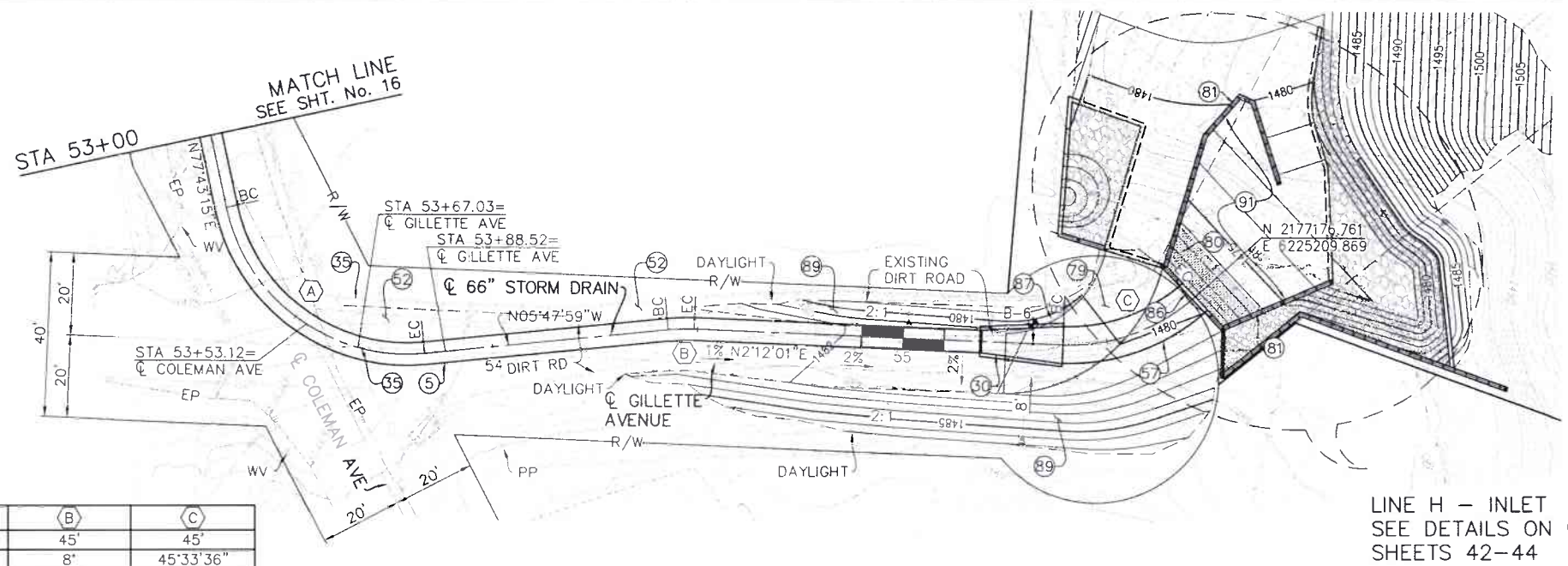

LINE H - INLET SEE DETAILS ON (92) SHEETS 42-44

PLAN

20' 0' 20'
SCALE 1"=20'

N

CONSTRUCTION NOTES

(5) CONSTRUCT 66" RCP

(30) CONSTRUCT TS NO.1 PER RCFC&WCD STD. TS301

(35) PROTECT IN PLACE

(52) REMOVE INTERFERING PORTIONS OF VEGETATION WITHIN RIGHT-OF-WAY

(57) CONSTRUCT 9'Wx5.5'H RCB PER CALTRANS STD. D80 (USE S=10' & H=6' FOR CONCRETE THICKNESS & REBAR)

(79) GRADE LOADING AREA AS SHOWN WITHIN GRADING LIMITS OR AS DIRECTED BY ENGINEER. PLACE 3" CRUSHED ROCK OVER COMPACTED NATIVE

(80) INSTALL INCLINED TRASH RACK PER SPPWC STD. PLAN 361-2, WITH 2 - 3' WIDE REMOVEABLE SECTIONS (L=10')

(81) CONSTRUCT BOX CULVERT WINGWALL TYPE "A" PER CALTRANS STD. D84

(86) CONSTRUCT PARAPET WALL PER DETAILS ON SHEET 51

(87) CONSTRUCT TYPE "D" CURB PER RCTD STD. NO. 204

(89) GRADE GILLETTE AVENUE PER SHEET 17; GRADE AREA AS SHOWN WITHIN GRADING LIMITS OR AS DIRECTED BY THE ENGINEER

(91) CONSTRUCT 6" CONCRETE APRON WITH #4@12" O.C. EACH WAY 2" CLEAR ON TOP

(92) GRADE LINE H INLET STRUCTURE AREA PER SHEETS 42-44; GRADE AREA AS SHOWN WITHIN GRADING LIMITS OR AS DIRECTED BY THE ENGINEER

CURVE DATA		(A)	(B)	(C)
R		45'	45'	45'
Δ		83°31'14"	8°	45°33'36"
L		65.60'	6.28'	35.78'
T		40.18'	3.15'	18.90'
B.C.		STA 53+17.87	STA 54+42.86	STA 55+39.17
E.C.		STA 53+83.47	STA 54+49.14	STA 55+74.39
P.I.	NORTHING	2177404.273	2177302.085	2177190.42
	EASTING	6225191.197	6225201.577	6225197.286

MANHOLE / JUNCTION STRUCTURE DATA				
LATERAL	℄ STATION	WALL STATION	STRUCTURE	ELEV S
LINE H	55+19.17	-	TS NO.1	-

CONSTRUCTION DRAWING SET DATED 22 JUNE, 2021

K&A Engineering, Inc.
ENGINEERING LAND PLANNING SURVEYING
357 N. SHERIDAN STREET SUITE 117 CORONA, CALIFORNIA 92880 TEL (951) 279-1800 FAX (951) 279-4380

REGISTERED PROFESSIONAL ENGINEER DONALD W. BERGH No. 28949 CIVIL STATE OF CALIFORNIA

ENGINEER R.C.E. 28949 DATE: 8/16/2021

COUNTY FILE No. 970-B

COUNTY OF RIVERSIDE TRANSPORTATION DEPARTMENT

RECMD COUNTY OVERSIGHT ENGINEER 7/11/21

APPROVES AS TO COMPLIANCE WITH APPLICABLE COUNTY STANDARDS AND PRACTICES.

REGISTRATION # 76450 DATE SIGNED

Don't Dig...Until You Call U.S.A. Toll Free DIAL 811 for the location of buried utility lines. Don't disrupt vital services.

TWO WORKING DAYS BEFORE YOU DIG

BENCH MARK
NAD83 Epoch 2011, CCS83, ZONE 6-
NAVD88(COH88)

RCFC B.M. Z 15502
SET MAG NAIL W/ RCFC WCD TAG FLUSH

E 6,226,565.52 N 2,177,350.50

ELEV: 1,401.46 SURVEY DATE: 02/2013

REF.	DESCRIPTION	APPR.	DATE
	REVISIONS		

RIVERSIDE COUNTY FLOOD CONTROL AND WATER CONSERVATION DISTRICT

DESIGNED BY: K&A ENGINEERING
DRAWN BY: ADA
DATE DRAWN: JUNE 2021
PB NUMBER: 226078

RECOMMENDED FOR APPROVAL BY: DATE 7-27-2021

APPROVED BY: DATE 8/4/2021

LAKELAND VILLAGE MDP STORM DRAIN

LINE H

STA 53+00 TO 55+74.39

PROJECT NO. 3-0-00020

DRAWING NO. 3-0207

SHEET NO. 17 OF 65

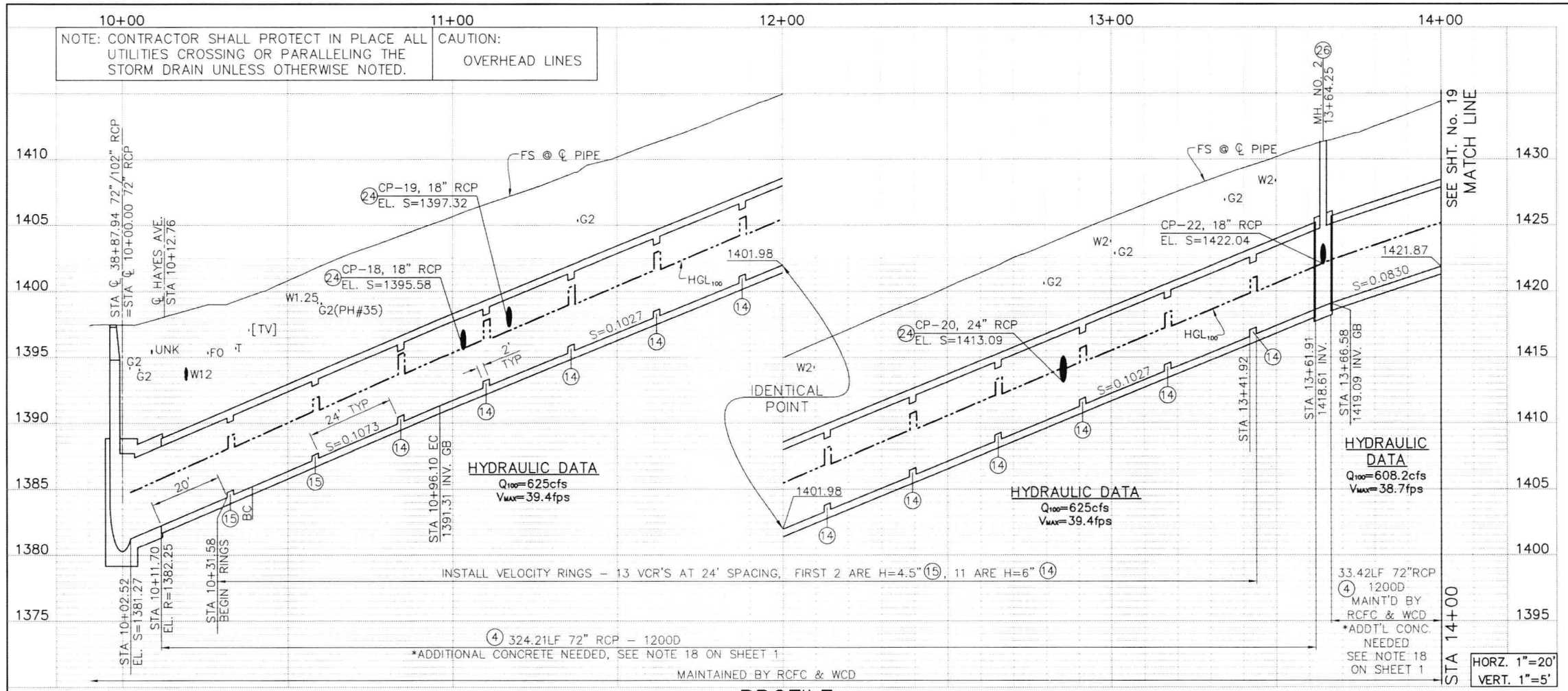

PROFILE

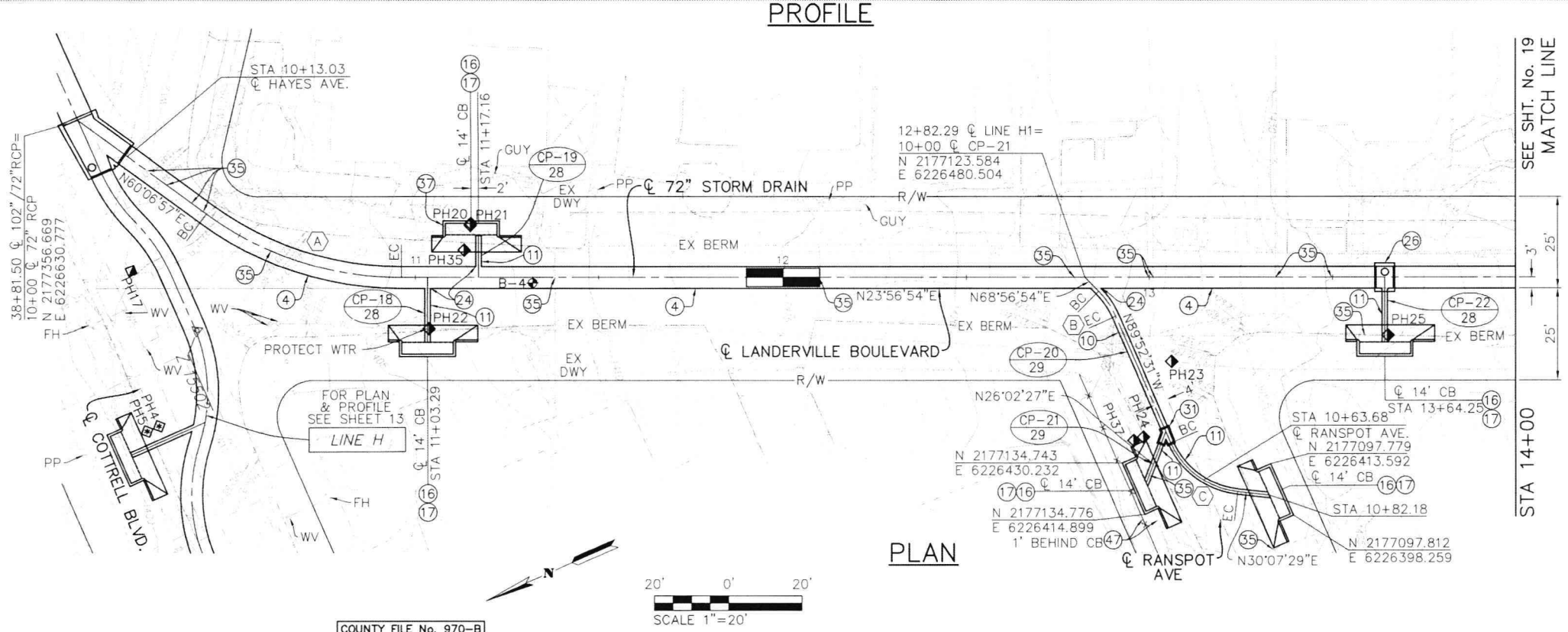

PLAN

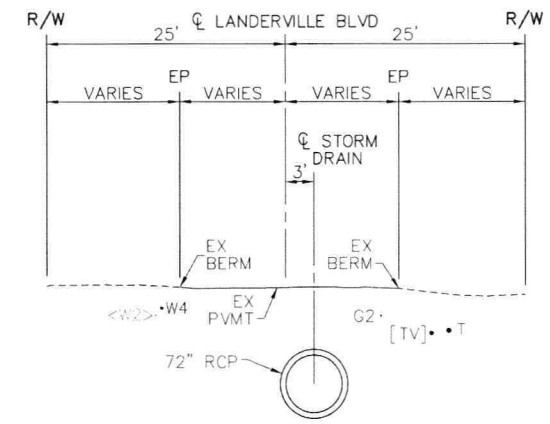

SECTION AT STA 12+00
TYPICAL FROM STA 10+96.10 TO STA 14+00

LEGEND

- B-X = SOIL BORING LOCATION
- PHX = POTHOLE LOCATION MARCH 2018
- PHX = MARKED FOR POTHOLE, NOTHING FOUND
- PHX = POTHOLE LOCATION JULY 2018
- PHX = MARKED FOR POTHOLE, NOTHING FOUND
- MX = POTHOLE LOCATION JUNE 2020
- CP-6 / 27 = CONNECTOR PIPE NUMBER / REFERENCE SHEET NUMBER

CURVE DATA	(A)	(B)	(C)
R	90'	22.5'	22.5'
Δ	36°10'02"	21°10'34"	60°
L	56.81'	8.32'	23.56'
T	29.39'	4.21'	12.99'
B.C.	STA 10+39.29	STA 10+04.11	STA 10+50.06
E.C.	STA 10+96.10	STA 10+12.42	STA 10+73.62
P.I. NORTHING	2177320.598	2177120.153	2177120.272
P.I. EASTING	6226568.008	6226471.588	6226416.757

MANHOLE / JUNCTION STRUCTURE DATA

LATERAL	℄ STATION	WALL STATION	STRUCTURE	A	B	C	D_1	D_2	ELEV S	ELEV R
CP-18	11+03.29	11+03.29	JS NO. 4	90°	–	–	–	–	1395.58	–
CP-19	11+17.16	11+17.16	JS NO. 4	90°	–	–	–	–	1397.32	–
CP-20	12+82.29	12+85.29	JS NO. 4	45°	–	–	–	–	1413.09	–
CP-21	10+46.60	10+47.50	TS NO. 3	45°	18"	3.8'	18"	24"	1418.80	1419.07
CP-22	13+64.25	13+64.25	MH NO. 2	90°	18"	–	72"	72"	1422.04	–

CONSTRUCTION NOTES

(4) CONSTRUCT 72" RCP
(10) CONSTRUCT 24" RCP
(11) CONSTRUCT 18" RCP
(14) INSTALL VELOCITY CONTROL RING PRECAST RCP SECTION PER SPPWC STD. PLAN 383-2 (D=72", H=6")
(15) INSTALL VELOCITY CONTROL RING PRECAST RCP SECTION PER SPPWC STD. PLAN 383-2 (D=72", H=4.5")
(16) CONSTRUCT CATCH BASIN NO.1 PER RCFC&WCD STD. CB100
(17) CONSTRUCT LOCAL DEPRESSION NO.2 PER RCFC&WCD STD. LD201
(24) CONSTRUCT JS NO.4 PER RCFC&WCD STD. JS229
(26) CONSTRUCT MANHOLE NO.2 PER RCFC&WCD STD. MH252
(31) CONSTRUCT TS NO.3 PER RCFC&WCD STD. TS303
(35) PROTECT IN PLACE
(37) FIBER OPTIC TO BE RELOCATED BY FRONTIER PRIOR TO CONSTRUCTION
(47) FENCE TO BE SALVAGED OR REPLACED IN KIND (SEE NOTE ON PLAN)

CONSTRUCTION DRAWING SET DATED 22 JUNE, 2021

K&A ENGINEERING LAND PLANNING SURVEYING
Engineering, Inc.
357 N. SHERIDAN STREET SUITE 117 CORONA, CALIFORNIA 92880 TEL. (951) 279-1800 FAX (951) 279-4380
ENGINEER R.C.E. 28949 DATE: 8/16/2021
REGISTERED PROFESSIONAL ENGINEER DONALD W. BOYCE No. 28949 CIVIL STATE OF CALIFORNIA

COUNTY FILE No. 970-B

COUNTY OF RIVERSIDE TRANSPORTATION DEPARTMENT
RECMD COUNTY OVERSIGHT ENGINEER 8/11/21
APPROVES AS TO COMPLIANCE WITH APPLICABLE COUNTY STANDARDS AND PRACTICES.
REGISTRATION # 76450 DATE SIGNED

Don't Dig...Until You Call U.S.A. Toll Free DIAL 811 for the location of buried utility lines. Don't disrupt vital services.
TWO WORKING DAYS BEFORE YOU DIG

BENCH MARK
NAD83 Epoch 2011, CCS83, ZONE 6- NAVD88(COH88)
RCFC B.M. Z 15502
SET MAG NAIL W/ RCFC WCD TAG FLUSH
E 6,226,565.52 N 2,177,350.50
ELEV.: 1,401.46 SURVEY DATE: 02/2013

REF.	DESCRIPTION	APPR.	DATE
	REVISIONS		

DESIGNED BY: K&A ENGINEERING
DRAWN BY: ADA
DATE DRAWN: JUNE 2021
PB NUMBER: 226078

RIVERSIDE COUNTY FLOOD CONTROL AND WATER CONSERVATION DISTRICT
RECOMMENDED FOR APPROVAL BY: DATE 7-27-2021
APPROVED BY: DATE 8/4/2021

LAKELAND VILLAGE MDP STORM DRAIN

LINE H1
STA 10+00 TO 14+00

PROJECT NO. 3-0-00020
DRAWING NO. 3-0207
SHEET NO. 18 OF 65

NOTE: CONTRACTOR SHALL PROTECT IN PLACE ALL UTILITIES CROSSING OR PARALLELING THE STORM DRAIN UNLESS OTHERWISE NOTED.

CAUTION: OVERHEAD LINES

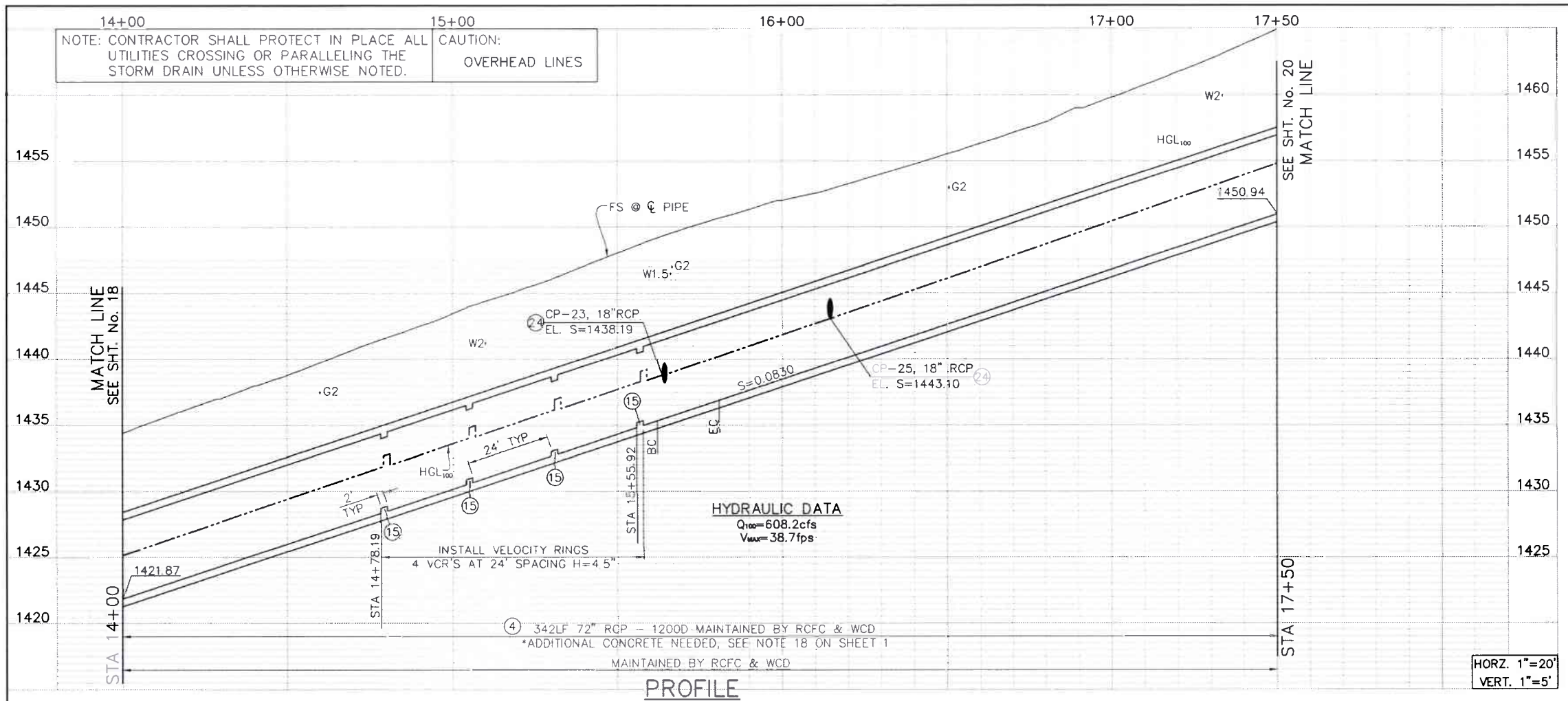

PROFILE

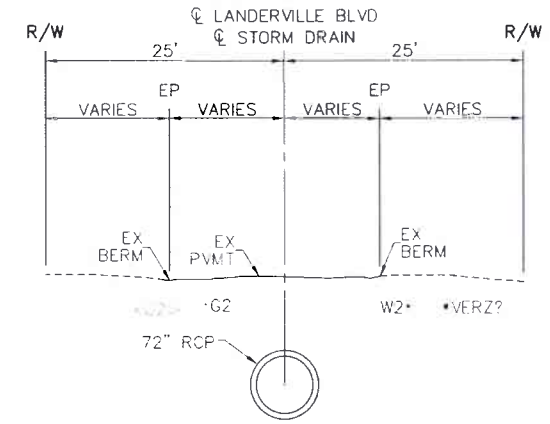

SECTION AT STA 17+00
TYPICAL FROM STA 14+00 TO STA 17+50

10' 0' 10'
SCALE 1"=10'

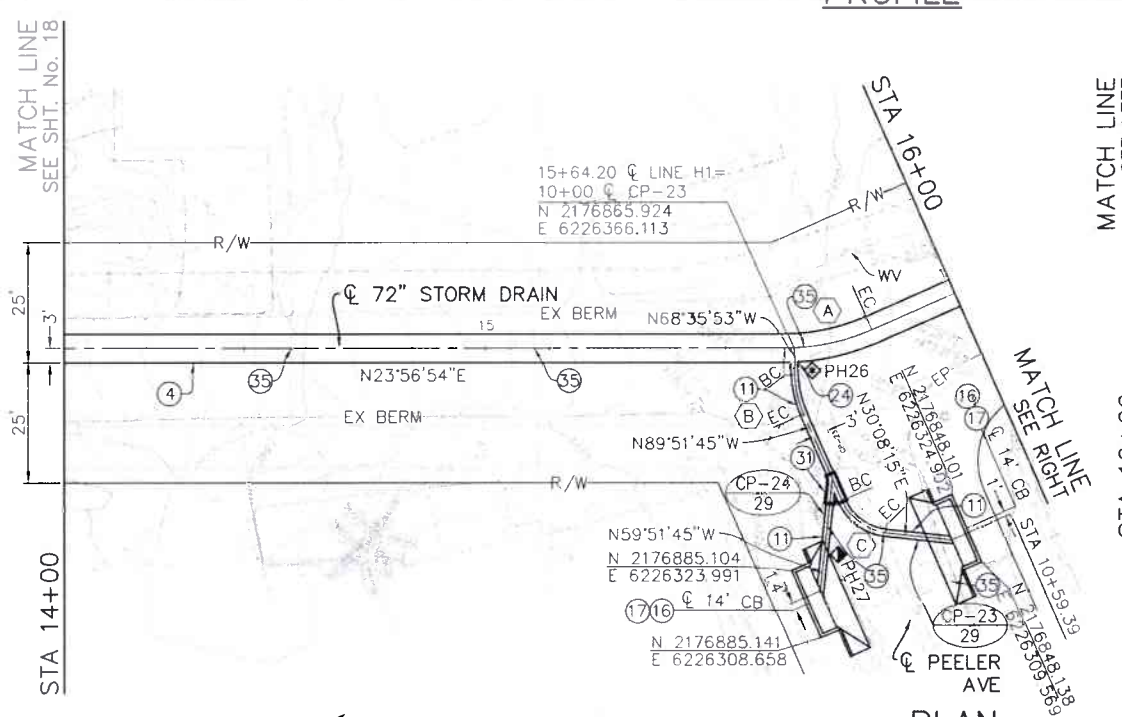

PLAN

20' 0' 20'
SCALE 1"=20'

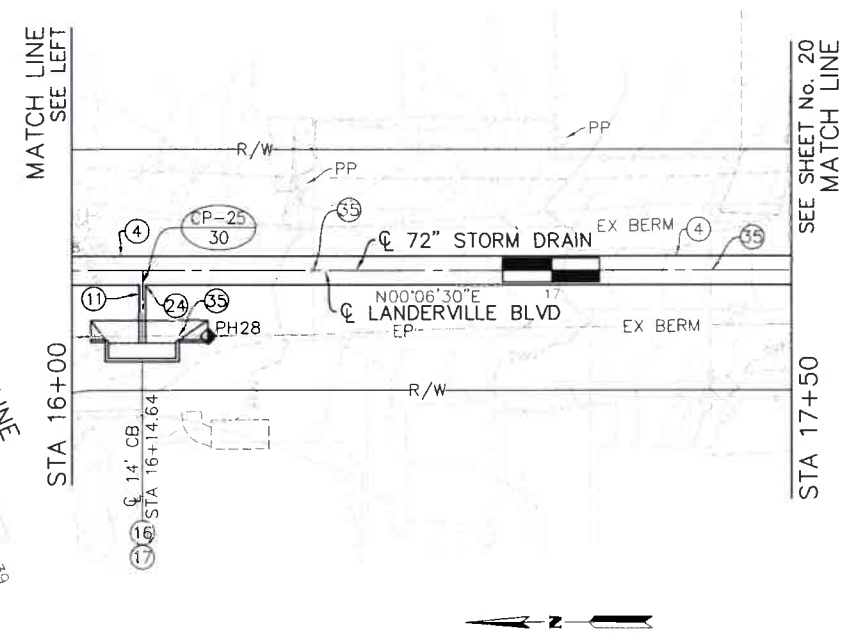

LEGEND

- B-X = SOIL BORING LOCATION
- PHX = POTHOLE LOCATION MARCH 2018
- PHX = MARKED FOR POTHOLE, NOTHING FOUND
- PHX = POTHOLE LOCATION JULY 2018
- PHX = MARKED FOR POTHOLE, NOTHING FOUND
- MX = POTHOLE LOCATION JUNE 2020
- CP-6 / 27 = CONNECTOR PIPE NUMBER / REFERENCE SHEET NUMBER

CURVE DATA		(A)	(B)	(C)
R		45.0'	22.5'	11.25'
Δ		23°50'24"	21°15'52"	60°
L		18.72'	8.35'	11.78'
T		9.50'	4.22'	6.50'
B.C.		STA 15+62.20	STA 10+05.64	STA 10+33.71
E.C.		STA 15+80.92	STA 10+13.99	STA 10+45.49
P.I.	NORTHING	2176859.088	2176869.525	2176869.598
	EASTING	6226363.028	6226356.927	6226326.493

MANHOLE / JUNCTION STRUCTURE DATA

LATERAL	℄ STATION	WALL STATION	STRUCTURE	A	B	C	D_1	D_2	ELEV S	ELEV R
CP-23	15+64.20	15+64.20	JS NO. 4	90°	18"	–	72"	72"	1438.19	–
CP-24	10+28.79	10+30.09	TS NO. 3	30°	18"	5.3'	18"	18"	1442.32	1443.28
CP-25	16+14.64	16+14.64	JS NO. 4	90°	18"	–	72"	72"	1443.10	–

CONSTRUCTION NOTES

(4) CONSTRUCT 72" RCP

(11) CONSTRUCT 18" RCP

(15) INSTALL VELOCITY CONTROL RING PRECAST RCP SECTION PER SPPWC STD. PLAN 383-2 (D=72", H=4.5")

(16) CONSTRUCT CATCH BASIN NO.1 PER RCFC&WCD STD. CB100

(17) CONSTRUCT LOCAL DEPRESSION NO.2 PER RCFC&WCD STD. LD201

(24) CONSTRUCT JS NO.4 PER RCFC&WCD STD. JS229

(31) CONSTRUCT TS NO.3 PER RCFC&WCD STD. TS303

(35) PROTECT IN PLACE

CONSTRUCTION DRAWING SET DATED 22 JUNE, 2021

KA Engineering, Inc.
ENGINEERING LAND PLANNING SURVEYING
357 N. SHERIDAN STREET SUITE 117 CORONA, CALIFORNIA 92880 TEL. (951) 279-1800 FAX (951) 279-4380

REGISTERED PROFESSIONAL ENGINEER DONALD W. BEACH No. 28949 CIVIL STATE OF CALIFORNIA

ENGINEER R.C.E. 28949 DATE: 8/16/2021

COUNTY FILE No. 970-B

COUNTY OF RIVERSIDE TRANSPORTATION DEPARTMENT

RECMD. COUNTY OVERSIGHT ENGINEER 8/11/21

APPROVES AS TO COMPLIANCE WITH APPLICABLE COUNTY STANDARDS AND PRACTICES.

REGISTRATION # 76450 DATE SIGNED

Don't Dig...Until You Call U.S.A. Toll Free DIAL 811 for the location of buried utility lines. Don't disrupt vital services.

TWO WORKING DAYS BEFORE YOU DIG

BENCH MARK
NAD83 Epoch 2011, CCS83, ZONE 6-NAVD88(COH88)
RCFC B.M. Z 15502
SET MAG NAIL W/ RCFC WCD TAG FLUSH
E 6,226,565.52 N 2,177,350.50
ELEV.: 1,401.46 SURVEY DATE: 02/2013

REF.	REVISIONS / DESCRIPTION	APPR.	DATE

RIVERSIDE COUNTY FLOOD CONTROL AND WATER CONSERVATION DISTRICT

DESIGNED BY: K&A ENGINEERING
DRAWN BY: ADA
DATE DRAWN: JUNE 2021
PB NUMBER: 226078

RECOMMENDED FOR APPROVAL BY: DATE 7-27-2021

APPROVED BY: DATE: 8/4/2021

LAKELAND VILLAGE MDP STORM DRAIN

LINE H1

STA 14+00 TO 17+50

PROJECT NO. 3-0-00020

DRAWING NO. 3-0207

SHEET NO. 19 OF 65

NOTE: CONTRACTOR SHALL PROTECT IN PLACE ALL UTILITIES CROSSING OR PARALLELING THE STORM DRAIN UNLESS OTHERWISE NOTED.

CAUTION: OVERHEAD LINES

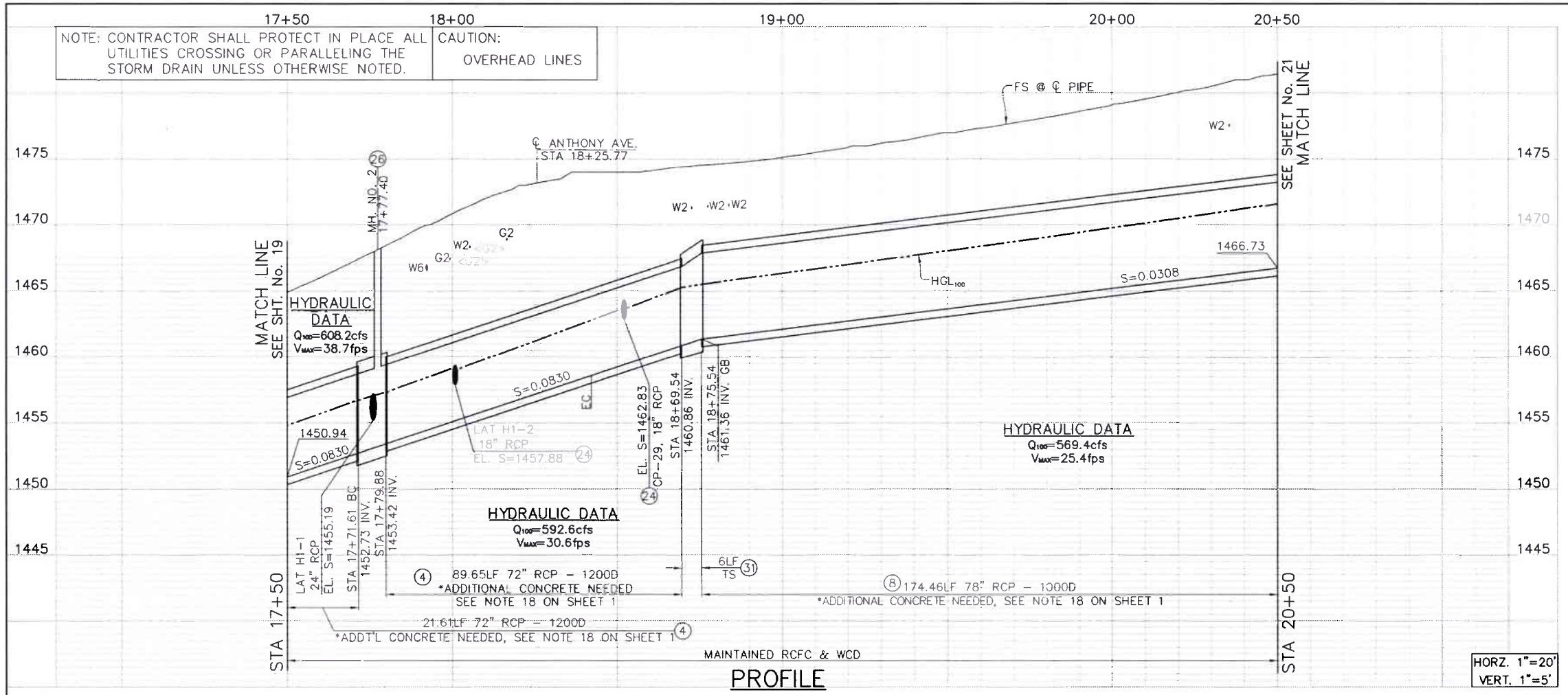

PROFILE

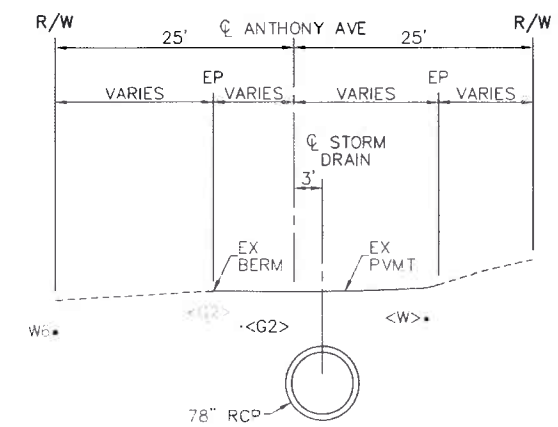

SECTION AT STA 20+00

TYPICAL FROM STA 18+75.54 TO STA 20+50

10' 0' 10'

LEGEND

- B-X = SOIL BORING LOCATION
- PHX = POTHOLE LOCATION MARCH 2018
- PHX = MARKED FOR POTHOLE, NOTHING FOUND
- PHX = POTHOLE LOCATION JULY 2018
- PHX = MARKED FOR POTHOLE, NOTHING FOUND
- MX = POTHOLE LOCATION JUNE 2020
- CP-6 / 27 = CONNECTOR PIPE NUMBER / REFERENCE SHEET NUMBER

MANHOLE / JUNCTION STRUCTURE DATA								
LATERAL	℄ STATION	WALL STATION	STRUCTURE	A	B	D_1	D_2	ELEV S
LAT H1-1	17+71.61	17+76.10	MH NO. 2	30'	24"	72"	72"	1455.19
LAT H1-2	17+98.16	18+00.89	JS NO. 4	45'	18"	72"	72"	1457.88
CP-29	18+52.23	18+52.23	JS NO. 4	90'	18"	72"	72"	1462.83

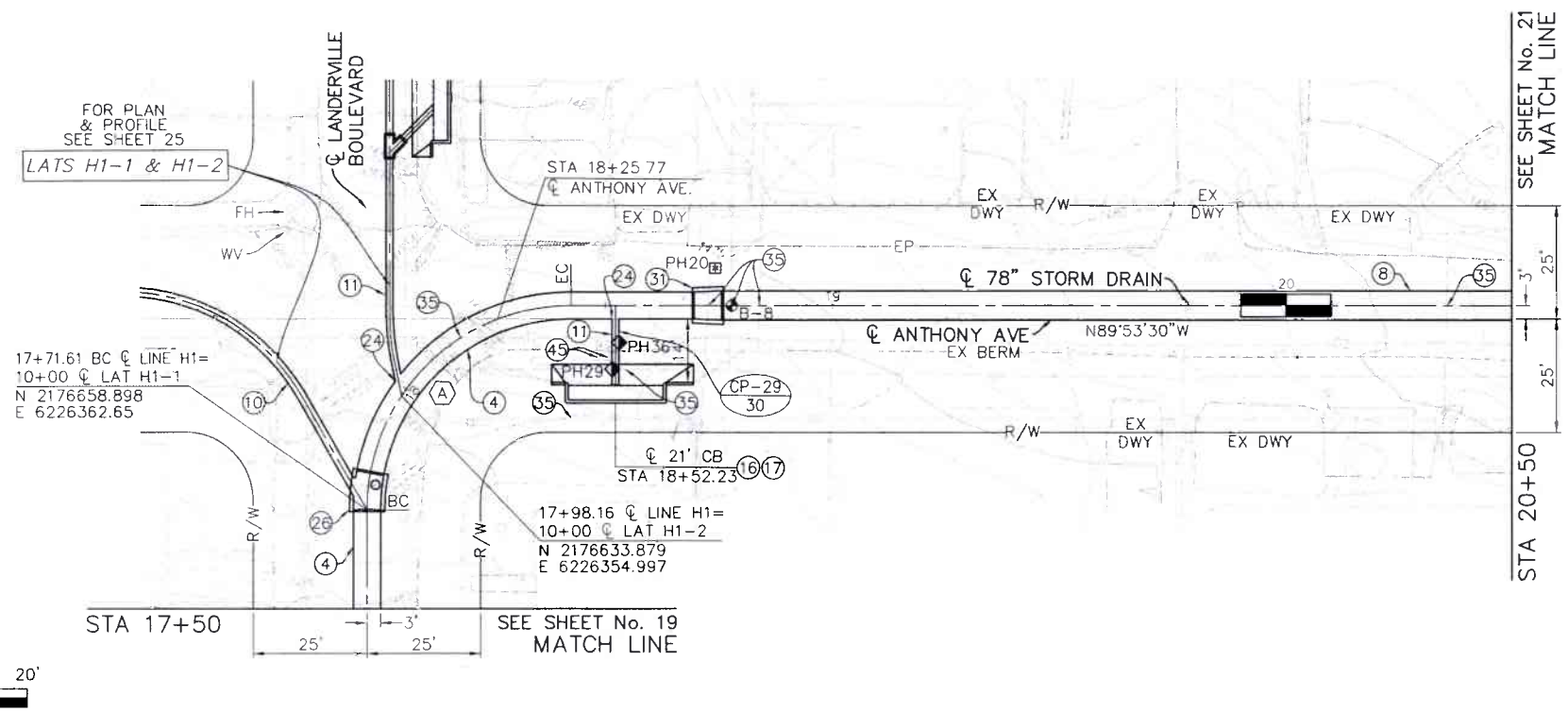

PLAN

CURVE DATA	(A)
R	45'
Δ	90°
L	70.69'
T	45'
B.C.	STA 17+71.61
E.C.	STA 18+42.30
P.I. NORTHING	2176613.898
P.I. EASTING	6226362.565

CONSTRUCTION NOTES

- (4) CONSTRUCT 72" RCP
- (8) CONSTRUCT 78" RCP
- (10) CONSTRUCT 24" RCP
- (11) CONSTRUCT 18" RCP
- (16) CONSTRUCT CATCH BASIN NO.1 PER RCFC&WCD STD. CB100
- (17) CONSTRUCT LOCAL DEPRESSION NO.2 PER RCFC&WCD STD. LD201
- (24) CONSTRUCT JS NO.4 PER RCFC&WCD STD. JS229
- (26) CONSTRUCT MANHOLE NO.2 PER RCFC&WCD STD. MH252
- (31) CONSTRUCT TS NO.3 PER RCFC&WCD STD. TS303
- (35) PROTECT IN PLACE
- (45) REMOVE & RELOCATE INTERFERING MAILBOX

CONSTRUCTION DRAWING SET DATED 22 JUNE, 2021

K&A Engineering, Inc.
ENGINEERING
LAND PLANNING
SURVEYING
357 N. SHERIDAN STREET
SUITE 117
CORONA, CALIFORNIA 92880
TEL (951) 279-1800
FAX (951) 279-4380

REGISTERED PROFESSIONAL ENGINEER DONALD W. BERGH No. 28949 CIVIL STATE OF CALIFORNIA

Donald Bergh 8/16/2021

ENGINEER R.C.E 28949 DATE:

COUNTY FILE No. 970-B

COUNTY OF RIVERSIDE TRANSPORTATION DEPARTMENT

REC'MD COUNTY OVERSIGHT ENGINEER 8/11/21

APPROVES AS TO COMPLIANCE WITH APPLICABLE COUNTY STANDARDS AND PRACTICES.

REGISTRATION # 76450 DATE SIGNED

Don't Dig...Until You Call U.S.A. Toll Free DIAL 811 for the location of buried utility lines. Don't disrupt vital services.

BURIED CABLE

TWO WORKING DAYS BEFORE YOU DIG

BENCH MARK
NAD83 Epoch 2011, CCS83, ZONE 6-NAVD88(CORS88)

RCFC B.M. Z 15502
SET MAG NAIL W/ RCFC WCD TAG FLUSH

E 6,226,565.52 N 2,177,350.50

ELEV.: 1,401.46 SURVEY DATE: 02/2013

REF.	REVISIONS	DESCRIPTION	APPR	DATE

RIVERSIDE COUNTY FLOOD CONTROL AND WATER CONSERVATION DISTRICT

DESIGNED BY: K&A ENGINEERING
DRAWN BY: ADA
DATE DRAWN: JUNE 2021
P8 NUMBER: 226078

RECOMMENDED FOR APPROVAL BY: DATE 7-27-2021

APPROVED BY: DATE 8/4/2021

LAKELAND VILLAGE MDP STORM DRAIN

LINE H1

STA 17+50 TO 20+50

PROJECT NO. 3-0-00020

DRAWING NO. 3-0207

SHEET NO. 20 OF 65

NOTE: CONTRACTOR SHALL PROTECT IN PLACE ALL UTILITIES CROSSING OR PARALLELING THE STORM DRAIN UNLESS OTHERWISE NOTED.

CAUTION: OVERHEAD LINES

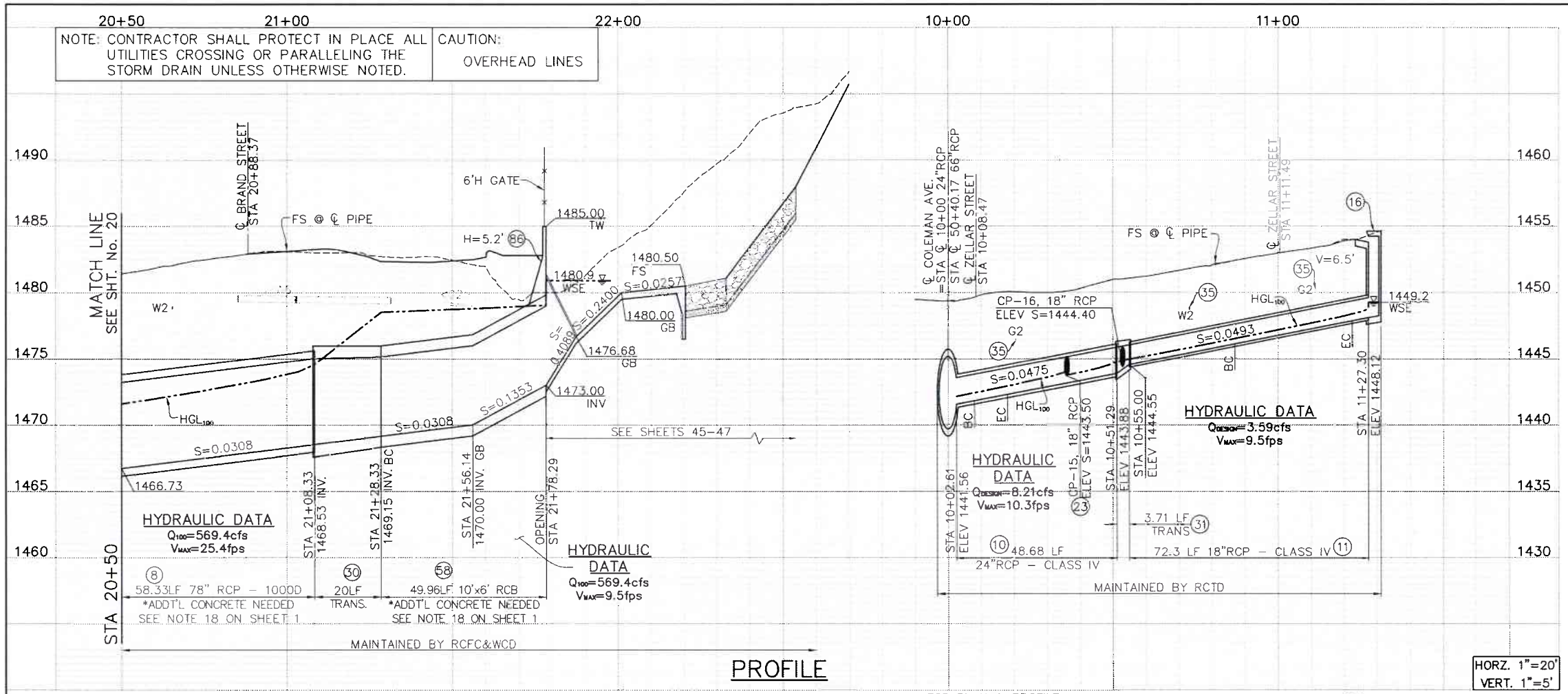

PROFILE

HORZ. 1"=20'
VERT. 1"=5'

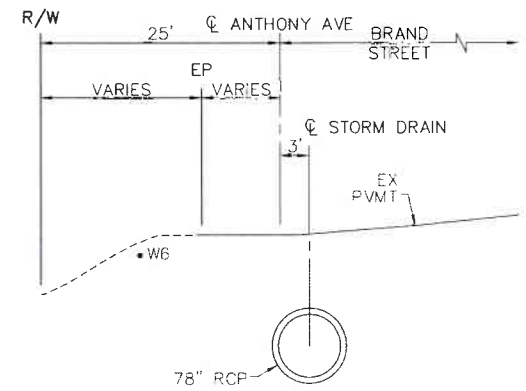

SECTION AT STA 20+75
NOT TYPICAL

10' 0' 10'

LEGEND

- B-X = SOIL BORING LOCATION
- PHX = POTHOLE LOCATION MARCH 2018
- PHX = MARKED FOR POTHOLE, NOTHING FOUND
- PHX = POTHOLE LOCATION JULY 2018
- PHX = MARKED FOR POTHOLE, NOTHING FOUND
- MX = POTHOLE LOCATION JUNE 2020
- CP-6 / 27 = CONNECTOR PIPE NUMBER / REFERENCE SHEET NUMBER

CONSTRUCTION NOTES

(8) CONSTRUCT 78" RCP
(9) CONSTRUCT 30" RCP
(10) CONSTRUCT 24" RCP
(11) CONSTRUCT 18" RCP
(16) CONSTRUCT CATCH BASIN NO.1 PER RCFC&WCD STD. CB100
(17) CONSTRUCT LOCAL DEPRESSION NO.2 PER RCFC&WCD STD. LD201
(23) CONSTRUCT JS NO.2 PER RCFC&WCD STD. JS227
(24) CONSTRUCT JS NO.4 PER RCFC&WCD STD. JS229
(30) CONSTRUCT TS NO.1 PER RCFC&WCD STD. TS301
(31) CONSTRUCT TS NO.3 PER RCFC&WCD STD. TS303
(35) PROTECT IN PLACE
(36) EXISTING 2" GAS LINE (PROTECT IN PLACE)
(41) VERIFY PLOTTED UTILITY IS IN THIS LOCATION, IF FOUND, VERIFY IF ABANDONED & REMOVE AS NEEDED
(45) REMOVE & RELOCATE INTERFERING MAILBOX
(51) TRIM OR REMOVE INTERFERING PORTION OF TREE WITHIN RIGHT-OF-WAY
(58) CONSTRUCT 10'WX6'H RCB PER CALTRANS STD. D80
(60) CONSTRUCT JS NO.8 PER RCFC&WCD STD. JS233
(64) CONSTRUCT MODIFIED CATCH BASIN NO.1 PER RCFC&WCD STD. CB100 & LOCAL DEPRESSION NO.2 PER RCFC&WCD STD. LD201 & DETAIL HEREON
(80) INSTALL INCLINED TRASH RACK PER SPPWC STD. PLAN 361-2, WITH 2 - 3' WIDE REMOVEABLE SECTIONS (L=10')
(81) CONSTRUCT BOX CULVERT WINGWALL TYPE "A" PER CALTRANS STD. D84
(86) CONSTRUCT PARAPET WALL PER DETAILS ON SHEET 51
(91) CONSTRUCT 6" CONCRETE APRON WITH #4@12" O.C. EACH WAY 2" CLEAR ON TOP
(93) GRADE LINE H1 INLET STRUCTURE AREA PER SHEETS 45-47; GRADE AREA AS SHOWN WITHIN GRADING LIMITS OR AS DIRECTED BY THE ENGINEER

CONSTRUCTION DRAWING SET DATED 22 JUNE, 2021

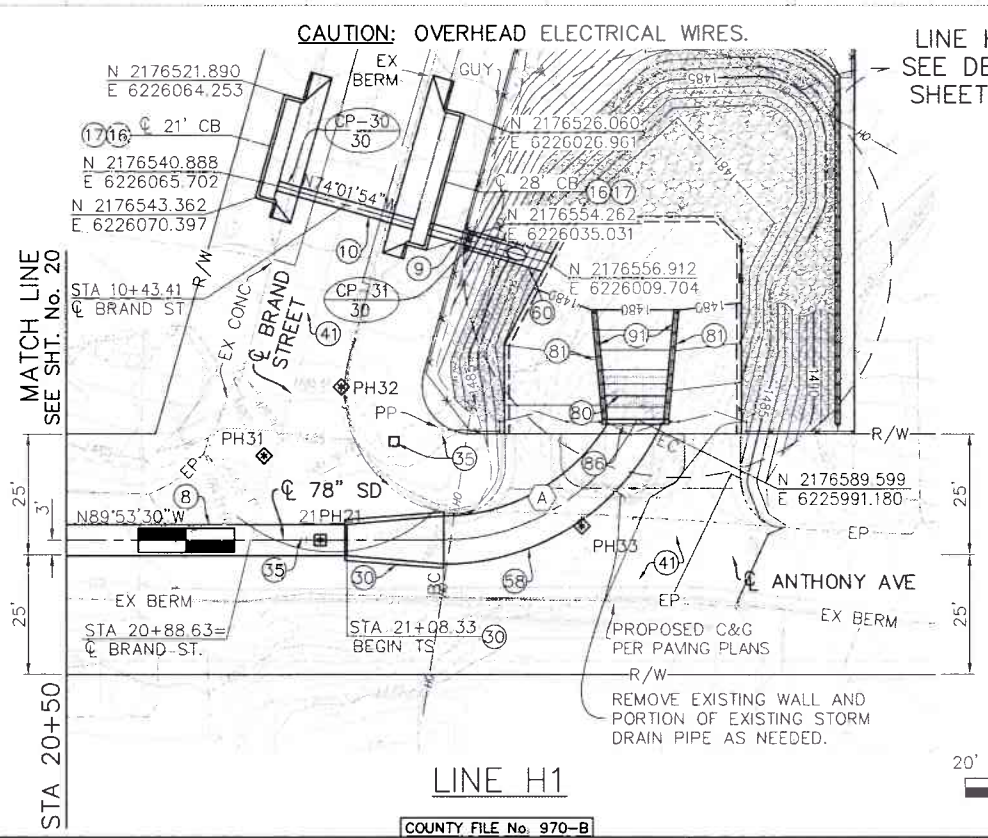

LINE H1

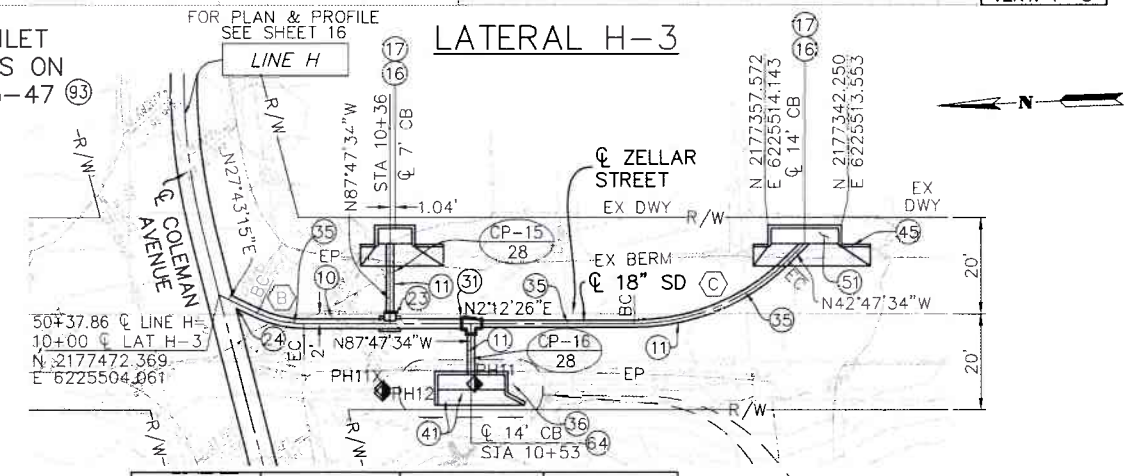

CURVE DATA		(A)	(B)	(C)
R		45'	22.5'	45'
Δ		63°36'46"	25°30'49"	45°
L		49.96'	10.02'	35.34'
T		27.91'	5.09'	18.64'
B.C.		STA 21+28.33	STA 10+08.01	STA 10+87.03
E.C.		STA 21+78.29	STA 10+18.02	STA 11+22.37
P.I.	NORTHING	2176614.576	2177460.03	6225494.006
	EASTING	6226003.63	6225497.577	2177367.362

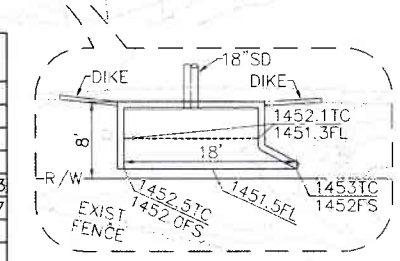

PLAN

20' 0' 20'

MANHOLE / JUNCTION STRUCTURE DATA

LATERAL	℄ STATION	WALL STATION	STRUCTURE	A	B	C	D_1	D_2	E	L	ELEV S	ELEV R
LINE H1	21+08.33	–	TS NO. 1	–	–	–	10'x6'	78"	–	–	–	–
CP-15	10+36	10+36	JS NO. 2	90°	18"	2.6'	24"	24"	1.1'	2.3	1443.50	1443.69
CP-16	10+53	10+53	TS NO. 3	90°	18"	2.4'	18"	24"	–	–	1444.40	1444.51

K&A ENGINEERING LAND PLANNING SURVEYING
Engineering, Inc.
357 N. SHERIDAN STREET
SUITE 117
CORONA, CALIFORNIA 92880
TEL. (951) 279-1800
FAX (951) 279-4380

REGISTERED PROFESSIONAL ENGINEER DONALD W. BERGH No. 28949 CIVIL STATE OF CALIFORNIA

Donald Bergh 8/16/2021
ENGINEER R.C.E. 28949 DATE

COUNTY FILE No. 970-B

COUNTY OF RIVERSIDE TRANSPORTATION DEPARTMENT
RECMD COUNTY OVERSIGHT ENGINEER 8/11/21
APPROVES AS TO COMPLIANCE WITH APPLICABLE COUNTY STANDARDS AND PRACTICES.
REGISTRATION # 76450 DATE SIGNED

Don't Dig...Until You Call U.S.A. Toll Free
DIAL 811
for the location of buried utility lines.
Don't disrupt vital services.
TWO WORKING DAYS BEFORE YOU DIG

BENCH MARK
NAD83 Epoch 2011, CCS83, ZONE 6-
NAVD88(COH88)
RCFC B.M. Z 15502
SET MAG NAIL W/ RCFC WCD TAG FLUSH
E 6,226,565.52 N 2,177,350.50
ELEV.: 1,401.46 SURVEY DATE: 02/2013

REF.	DESCRIPTION	APPR.	DATE
	REVISIONS		

RIVERSIDE COUNTY FLOOD CONTROL AND WATER CONSERVATION DISTRICT
DESIGNED BY: K&A ENGINEERING
DRAWN BY: ADA
DATE DRAWN: JUNE 2021
P8 NUMBER: 226078
RECOMMENDED FOR APPROVAL BY: Donald W. Bergh DATE 7-27-2021
APPROVED BY: DATE 8/4/2021

LAKELAND VILLAGE MDP STORM DRAIN

LINE H1 STA 20+50 TO 21+78.29
LAT H3 STA 10+00 TO 11+27.30

PROJECT NO. 3-0-00020
DRAWING NO. 3-0207
SHEET NO. 21 OF 65

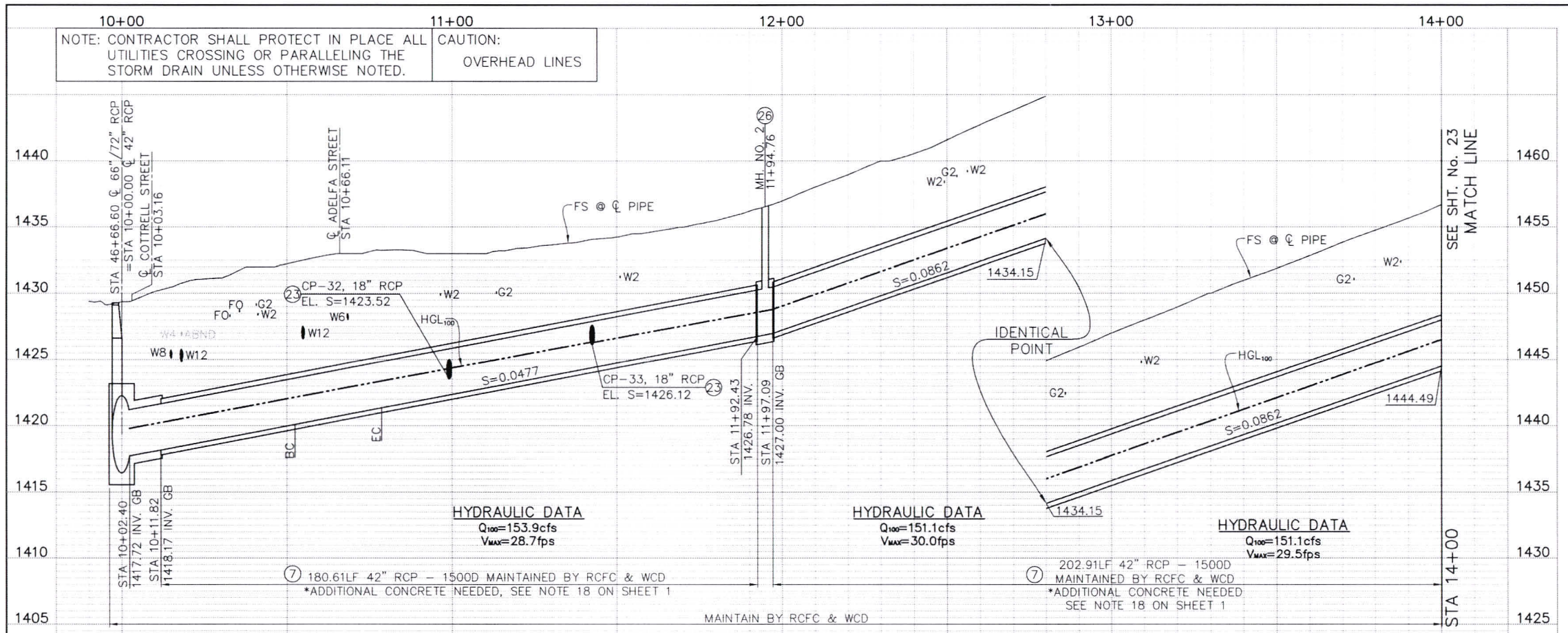

PROFILE

HORZ. 1"=20'
VERT. 1"=5'

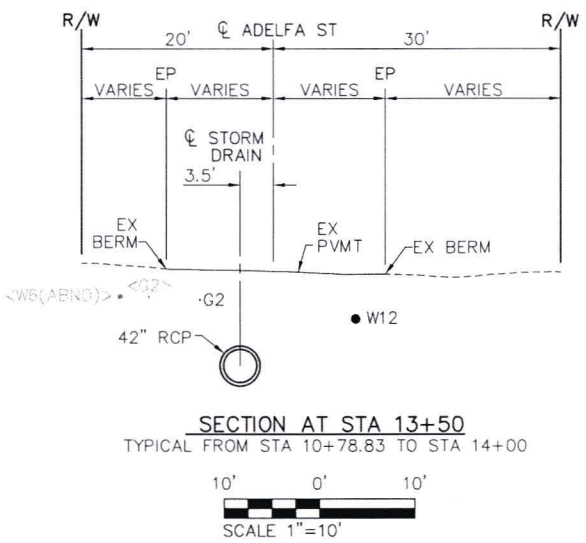

SECTION AT STA 13+50

TYPICAL FROM STA 10+78.83 TO STA 14+00

10' 0' 10'
SCALE 1"=10'

CURVE DATA	(A)
R	22.5'
Δ	67°02'40"
L	26.33'
T	14.91'
B.C.	STA 10+52.50
E.C.	STA 10+78.83
P.I. NORTHING	2177349.49
P.I. EASTING	6225791.84

LEGEND

- B-X = SOIL BORING LOCATION
- PHX = POTHOLE LOCATION MARCH 2018
- PHX = MARKED FOR POTHOLE, NOTHING FOUND
- PHX = POTHOLE LOCATION JULY 2018
- PHX = MARKED FOR POTHOLE, NOTHING FOUND
- MX = POTHOLE LOCATION JUNE 2020
- (CP-6 / 27) = CONNECTOR PIPE NUMBER / REFERENCE SHEET NUMBER

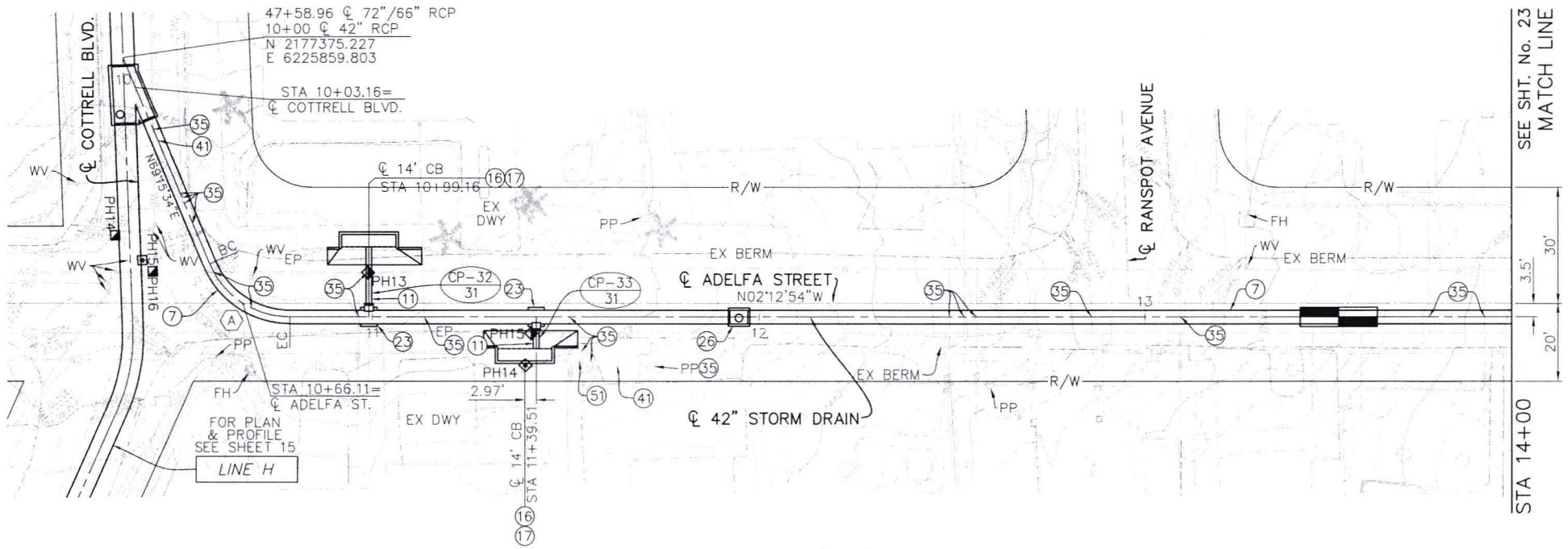

PLAN

N

20' 0' 20'
SCALE 1"=20'

CONSTRUCTION NOTES

(7) CONSTRUCT 42" RCP

(11) CONSTRUCT 18" RCP

(16) CONSTRUCT CATCH BASIN NO.1 PER RCFC&WCD STD. CB100

(17) CONSTRUCT LOCAL DEPRESSION NO.2 PER RCFC&WCD STD. LD201

(23) CONSTRUCT JS NO.2 PER RCFC&WCD STD. JS227

(26) CONSTRUCT MANHOLE NO.2 PER RCFC&WCD STD. MH252

(35) PROTECT IN PLACE

(41) VERIFY PLOTTED UTILITY IS IN THIS LOCATION, IF FOUND, VERIFY IF ABANDONED & REMOVE AS NEEDED

(51) TRIM OR REMOVE INTERFERING PORTION OF TREE WITHIN RIGHT-OF-WAY

MANHOLE / JUNCTION STRUCTURE DATA

LATERAL	℄ STATION	WALL STATION	STRUCTURE	A	B	C	D	E	L	ELEV S	ELEV R
CP-32	10+99.16	10+99.16	JS NO. 2	90°	18"	3.5'	42"	1.13'	2.25'	1423.52	1423.67
CP-33	11+42.53	11+42.53	JS NO. 2	90°	18"	3.5'	42"	1.13'	2.25'	1426.12	1426.66
–	11+94.76	–	MH NO. 2	–	–	–	42"	–	–	–	–

CONSTRUCTION DRAWING SET DATED 22 JUNE, 2021

K&A Engineering, Inc.
ENGINEERING LAND PLANNING SURVEYING
357 N. SHERIDAN STREET SUITE 117 CORONA, CALIFORNIA 92880 TEL (951) 279-1800 FAX (951) 279-4380

REGISTERED PROFESSIONAL ENGINEER DONALD W. BERGH No. 28949 CIVIL STATE OF CALIFORNIA

ENGINEER R.C.E. 28949 DATE: 8/16/2021

COUNTY FILE No. 970-B

COUNTY OF RIVERSIDE TRANSPORTATION DEPARTMENT
RECMD COUNTY OVERSIGHT ENGINEER 7/11/21
APPROVES AS TO COMPLIANCE WITH APPLICABLE COUNTY STANDARDS AND PRACTICES.
REGISTRATION # 76450 DATE SIGNED

Don't Dig...Until You Call U.S.A. Toll Free DIAL 811 for the location of buried utility lines. Don't disrupt vital services.
TWO WORKING DAYS BEFORE YOU DIG

BENCH MARK
NAD83 Epoch 2011, CCS83, ZONE 6- NAVD88(COH88)
RCFC B.M. Z 15502
SET MAG NAIL W/ RCFC WCD TAG FLUSH
E 6,226,565.52 N 2,177,350.50
ELEV.: 1,401.46 SURVEY DATE: 02/2013

REF.	DESCRIPTION	APPR.	DATE
	REVISIONS		

RIVERSIDE COUNTY FLOOD CONTROL AND WATER CONSERVATION DISTRICT
DESIGNED BY: K&A ENGINEERING
DRAWN BY: ADA
DATE DRAWN: JUNE 2021
P8 NUMBER: 226078
RECOMMENDED FOR APPROVAL BY: DATE 7-27-2021
APPROVED BY: DATE 8/4/2021

LAKELAND VILLAGE MDP STORM DRAIN
LINE H2
STA 10+00 TO 14+00

PROJECT NO. 3-0-00020
DRAWING NO. 3-0207
SHEET NO. 22 OF 65

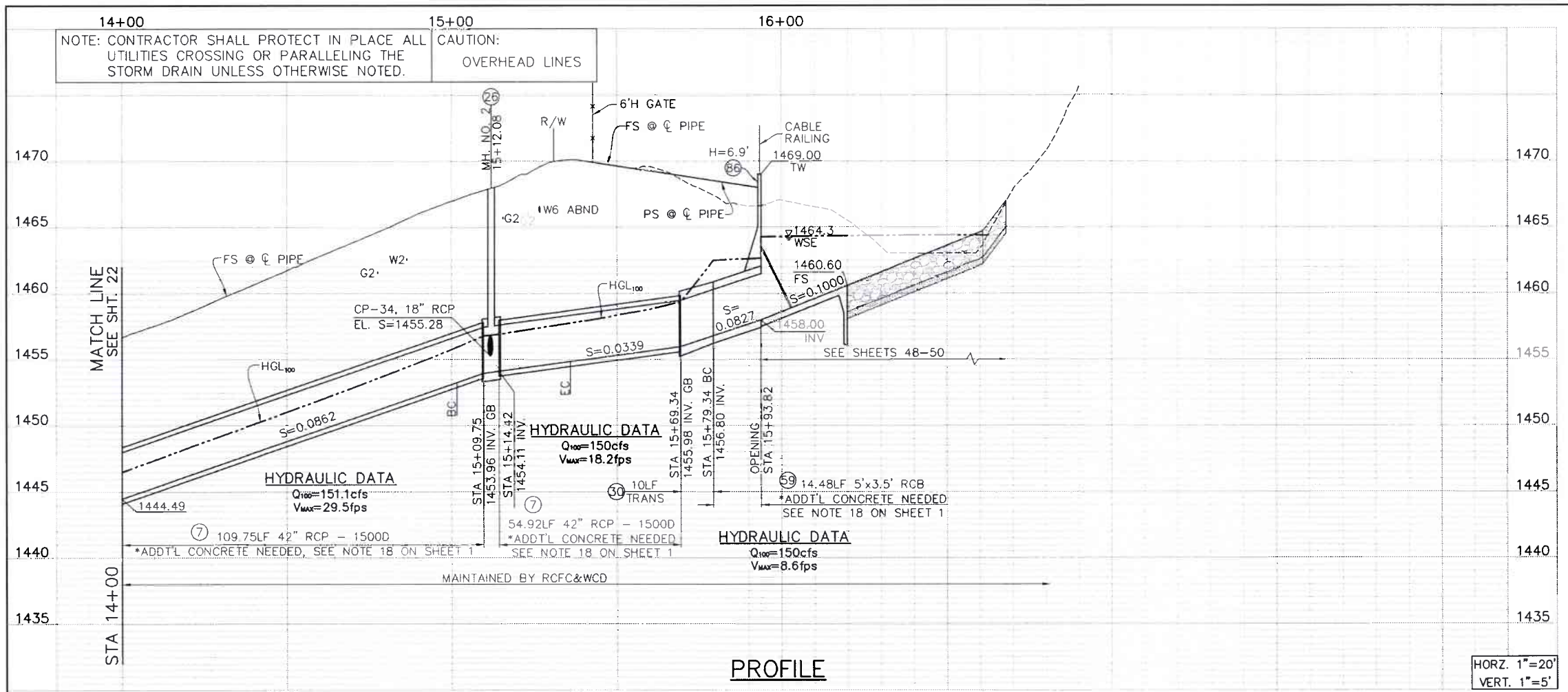

PROFILE

HORZ. 1"=20'
VERT. 1"=5'

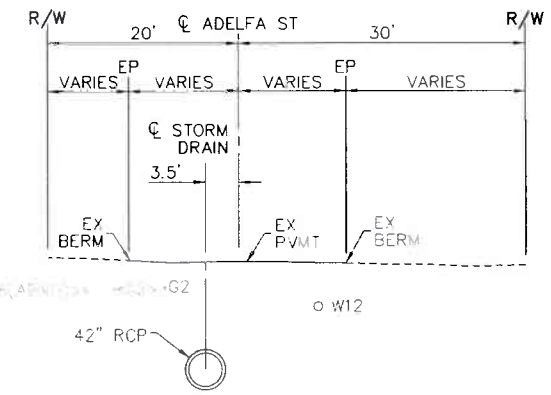

SECTION AT STA 14+50

TYPICAL FROM STA 14+00 TO STA 15+01.65

10' 0' 10'
SCALE 1"=10'

LEGEND

- B-X = SOIL BORING LOCATION
- PHX = POTHOLE LOCATION MARCH 2018
- PHX = MARKED FOR POTHOLE, NOTHING FOUND
- PHX = POTHOLE LOCATION JULY 2018
- PHX = MARKED FOR POTHOLE, NOTHING FOUND
- MX = POTHOLE LOCATION JUNE 2020
- (CP-6 / 27) = CONNECTOR PIPE NUMBER / REFERENCE SHEET NUMBER

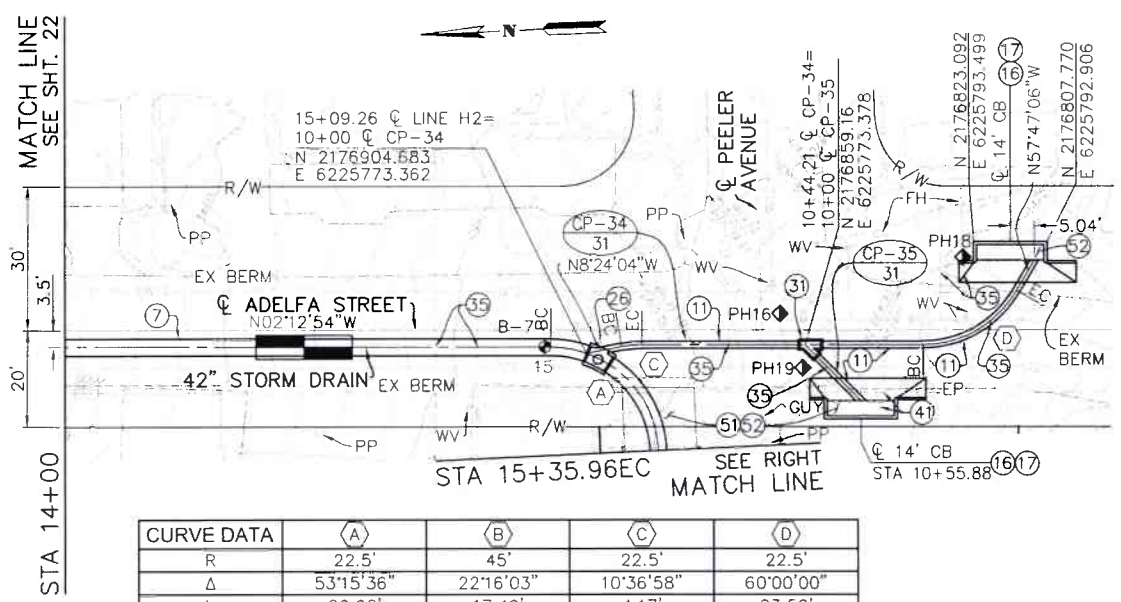

CURVE DATA		(A)	(B)	(C)	(D)
R		22.5'	45'	22.5'	22.5'
Δ		53°15'36"	22°16'03"	10°36'58"	60°00'00"
L		20.92'	17.49'	4.17'	23.56'
T		11.28'	8.86'	2.09'	12.99'
B.C.		STA 15+01.65	STA 15+79.34	STA 10+06.11	STA 10+68.98
E.C.		STA 15+35.96	STA 15+96.82	STA 10+10.28	STA 10+92.54
P.I.	NORTHING	2176890.62	2176890.09	2176895.150	2176821.422
	EASTING	6225774.09	6225700.37	6225774.770	6225771.918

PLAN

20' 0' 20'
SCALE 1"=20'

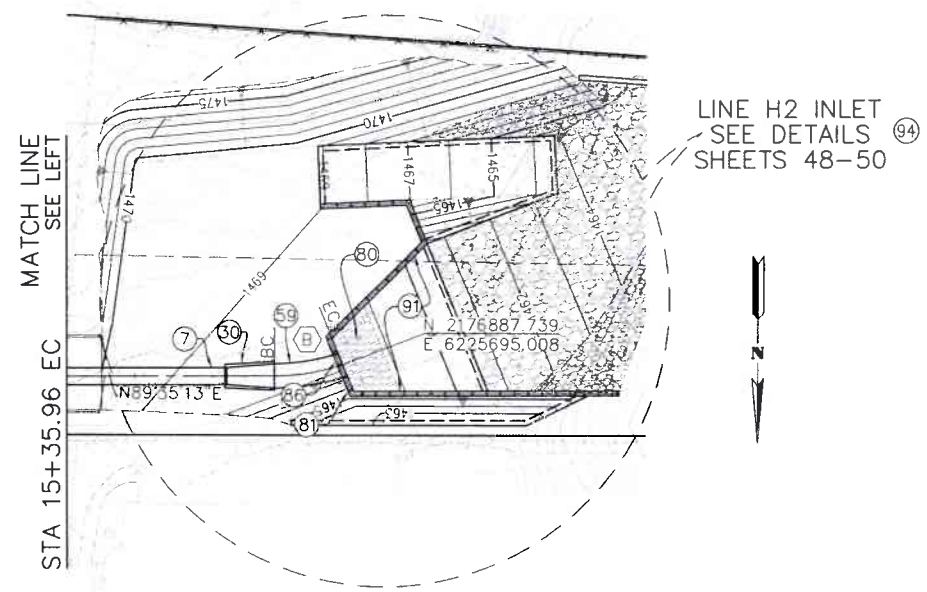

MANHOLE / JUNCTION STRUCTURE DATA										
LATERAL	℄ STATION	WALL STATION	STRUCTURE	A	B	C	D_1	D_2	ELEV S	ELEV R
CP-34	15+09.26	15+11.83	MH NO. 4	30'	24"	–	42"	42"	1455.28	–
CP-35	10+44.21	10+44.96	TS NO. 3	45'	18"	3.7'	18"	18"	1462.28	1463.16
LINE H2	15+69.34	–	TS NO. 1	–	–	–	5'X3.5'	42"	–	–

CONSTRUCTION NOTES

- (7) CONSTRUCT 42" RCP
- (11) CONSTRUCT 18" RCP
- (16) CONSTRUCT CATCH BASIN NO.1 PER RCFC&WCD STD. CB100
- (17) CONSTRUCT LOCAL DEPRESSION NO.2 PER RCFC&WCD STD. LD201
- (26) CONSTRUCT MANHOLE NO.2 PER RCFC&WCD STD. MH252
- (30) CONSTRUCT TS NO.1 PER RCFC&WCD STD. TS301
- (31) CONSTRUCT TS NO.3 PER RCFC&WCD STD. TS303
- (35) PROTECT IN PLACE
- (41) VERIFY PLOTTED UTILITY IS IN THIS LOCATION, IF FOUND, VERIFY IF ABANDONED & REMOVE AS NEEDED
- (51) TRIM OR REMOVE INTERFERING PORTION OF TREE WITHIN RIGHT-OF-WAY
- (52) REMOVE INTERFERING PORTIONS OF VEGETATION WITHIN RIGHT-OF-WAY
- (59) CONSTRUCT 5'Wx3.5'H RCB PER CALTRANS STD. D80 (USE H=4' FOR CONCRETE THICKNESS & REBAR)
- (80) INSTALL INCLINED TRASH RACK PER SPPWC STD. PLAN 361-2, WITH 2 - 3' WIDE REMOVEABLE SECTIONS (L=10')
- (81) CONSTRUCT BOX CULVERT WINGWALL TYPE "A" PER CALTRANS STD. D84
- (86) CONSTRUCT PARAPET WALL PER DETAILS ON SHEET 51
- (91) CONSTRUCT 6" CONCRETE APRON WITH #4@12" O.C. EACH WAY 2" CLEAR ON TOP
- (94) GRADE LINE H2 INLET STRUCTURE AREA PER SHEETS 48-50; GRADE AREA AS SHOWN WITHIN GRADING LIMITS OR AS DIRECTED BY THE ENGINEER

CONSTRUCTION DRAWING SET DATED 22 JUNE, 2021

K&A Engineering, Inc.
ENGINEERING
LAND PLANNING
SURVEYING
357 N. SHERIDAN STREET
SUITE 117
CORONA, CALIFORNIA 92880
TEL. (951) 279-1800
FAX (951) 279-4380
Donald Beach 8/16/2021
ENGINEER R.C.E. 28949 DATE:
REGISTERED PROFESSIONAL ENGINEER DONALD W. BEACH No. 28949 CIVIL STATE OF CALIFORNIA

COUNTY FILE No. 970-B
COUNTY OF RIVERSIDE
TRANSPORTATION DEPARTMENT
RECMD COUNTY OVERSIGHT ENGINEER 8/4/21
APPROVES AS TO COMPLIANCE WITH APPLICABLE COUNTY STANDARDS AND PRACTICES.
REGISTRATION # 76450 DATE SIGNED

Don't Dig...Until You Call U.S.A. Toll Free DIAL 811 for the location of buried utility lines. Don't disrupt vital services.
TWO WORKING DAYS BEFORE YOU DIG

BENCH MARK
NAD83 Epoch 2011, CCS83, ZONE 6-
NAVD88(COH88)
RCFC B.M. Z 15502
SET MAG NAIL W/ RCFC WCD TAG FLUSH
E 6,226,565.52 N 2,177,350.50
ELEV.: 1,401.46 SURVEY DATE: 02/2013

REF	REVISIONS DESCRIPTION	APPR.	DATE

RIVERSIDE COUNTY FLOOD CONTROL AND WATER CONSERVATION DISTRICT
DESIGNED BY: K&A ENGINEERING
DRAWN BY: ADA
DATE DRAWN: JUNE 2021
P8 NUMBER: 226078
RECOMMENDED FOR APPROVAL BY: DATE: 7-27-2021
APPROVED BY: DATE: 8/4/2021

LAKELAND VILLAGE MDP STORM DRAIN

LINE H2

STA 14+00 TO 15+93.82

PROJECT NO. 3-0-00020
DRAWING NO. 3-0207
SHEET NO. 23 OF 65

NOTE: CONTRACTOR SHALL PROTECT IN PLACE ALL UTILITIES CROSSING OR PARALLELING THE STORM DRAIN UNLESS OTHERWISE NOTED.

CAUTION: OVERHEAD LINES

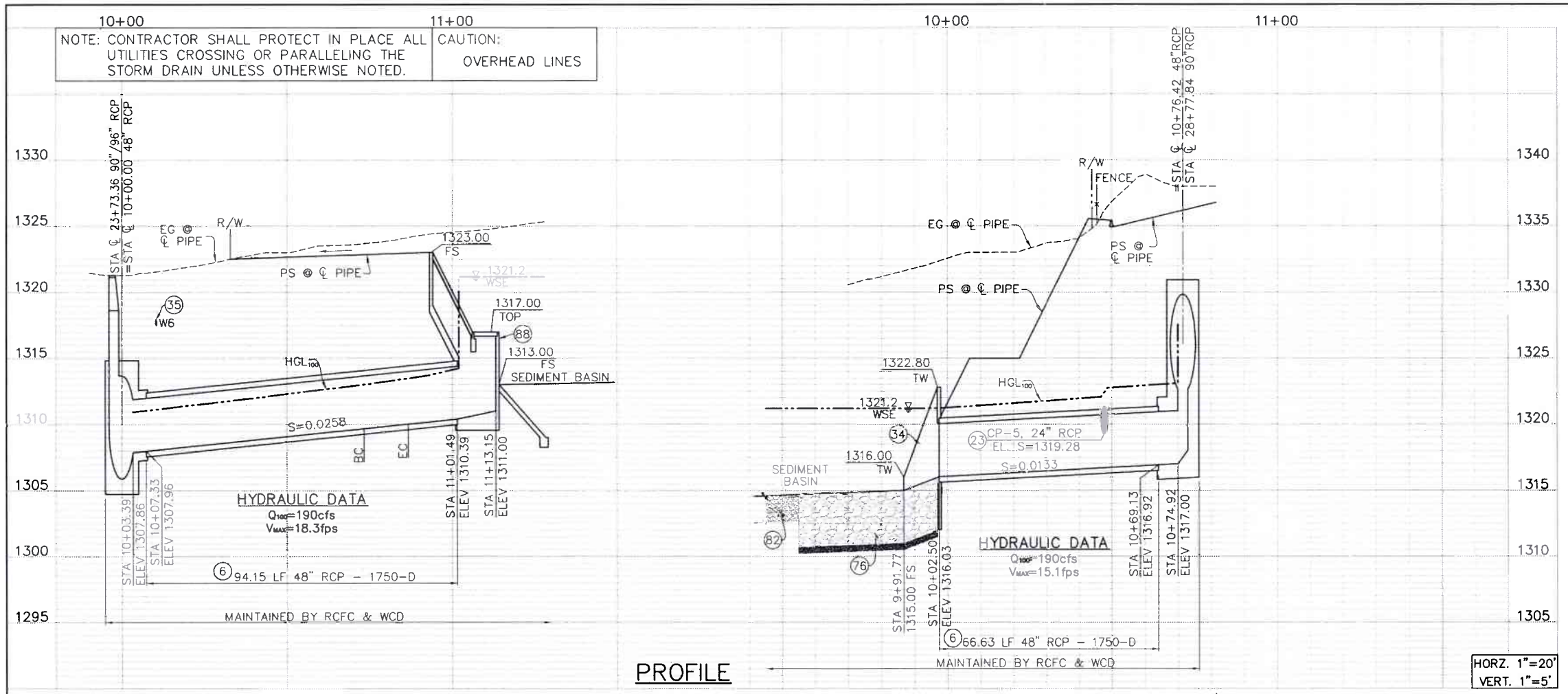

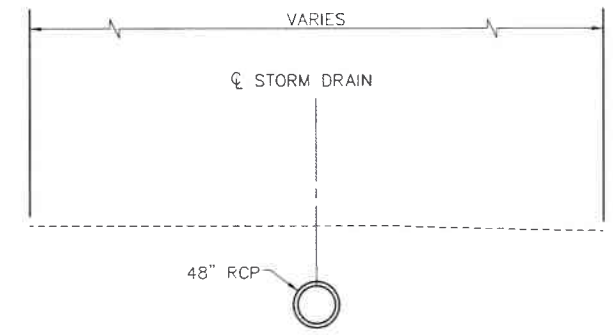

SECTION AT STA 10+18

TYPICAL FROM STA 10+11.77 TO STA 10+26.77

10' 0' 10'

SCALE 1"=10'

LEGEND

- B-X = SOIL BORING LOCATION
- PHX = POTHOLE LOCATION MARCH 2018
- PHX = MARKED FOR POTHOLE, NOTHING FOUND
- PHX = POTHOLE LOCATION JULY 2018
- PHX = MARKED FOR POTHOLE, NOTHING FOUND
- MX = POTHOLE LOCATION JUNE 2020
- CP-6 / 27 = CONNECTOR PIPE NUMBER / REFERENCE SHEET NUMBER

CURVE DATA		(A)	(B)	(C)
R		45'	45.0'	45.0'
Δ		16°59'54"	28°29'05"	28°29'05"
L		13.35'	22.37'	22.37'
T		6.72'	11.42'	11.42'
B.C.		STA 10+71.84	STA 28+47.66	STA 28+90.11
E.C.		STA 10+86.69	STA 28+70.03	STA 29+12.48
P.I.	NORTHING	2178339.504	2178044.923	2178006.424
	EASTING	6227075.035	6226984.442	6227003.422

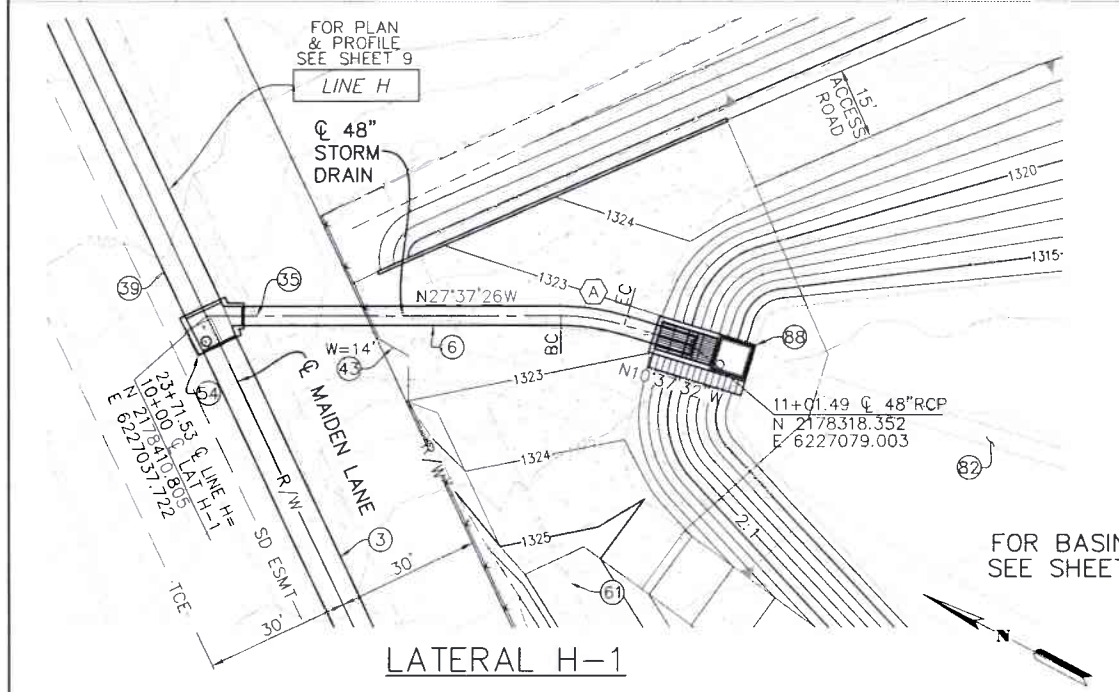

LATERAL H-1

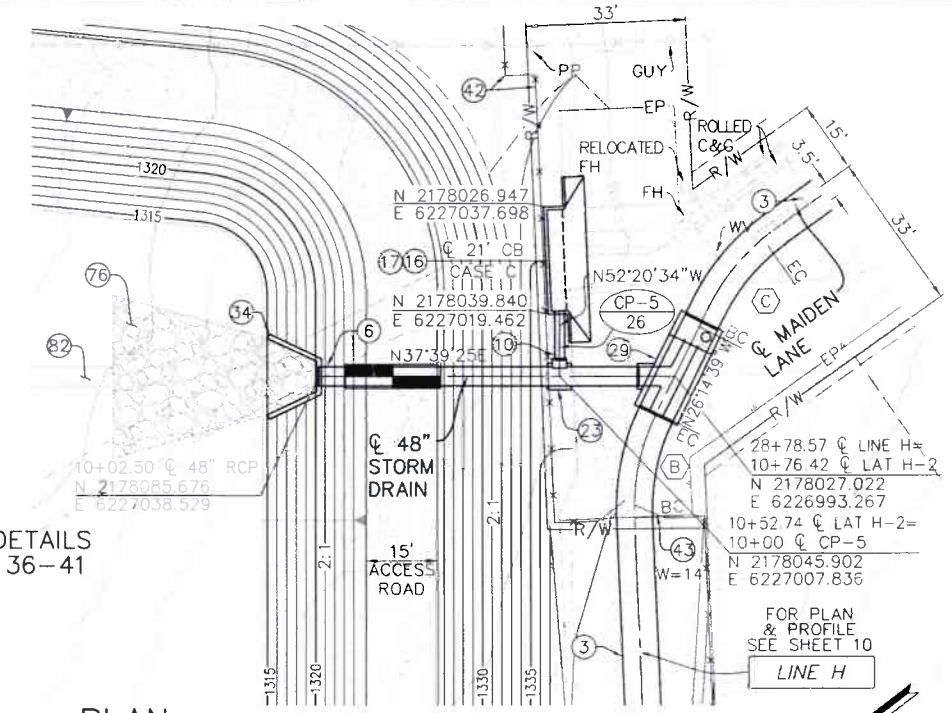

LATERAL H-2

PLAN

20' 0' 20'

SCALE 1"=20'

CONSTRUCTION NOTES

(3) CONSTRUCT 90" RCP
(6) CONSTRUCT 48" RCP
(10) CONSTRUCT 24" RCP
(16) CONSTRUCT CATCH BASIN NO.1 PER RCFC&WCD STD. CB100
(17) CONSTRUCT LOCAL DEPRESSION NO.2 PER RCFC&WCD STD. LD201
(23) CONSTRUCT JS NO.2 PER RCFC&WCD STD. JS227
(29) CONSTRUCT BIFURCATION STRUCTURE PER DETAIL ON SHEET 39
(34) CONSTRUCT CONCRETE HEADWALL & WINGWALL TYPE "A" PER CALTRANS STD. D90, L=11.3', ANGLE=25.6°
(35) PROTECT IN PLACE
(39) CONSTRUCT 96" RCP
(42) INSTALL 6' HIGH CHAIN LINK FENCE PER RCFC&WCD STD. M801
(43) INSTALL DOUBLE DRIVE GATE PER RCFC&WCD STD. M801, W PER PLAN
(54) CONSTRUCT 6'X6'X6" CLASS B CONCRETE SLAB AROUND MANHOLE PER DETAIL ON SHEET 9
(61) REMOVE & LEGALLY DISPOSE OF INTERFERING PORTIONS OF EXISTING FENCE
(76) PLACE 48" THICK CLASS VII (1/2 TON) ROCK SLOPE PROTECTION OVER 6" FILTER MATERIAL OVER FILTER FABRIC PER DETAIL ON SHEET 51
(82) CONSTRUCT LOW FLOW GRAVEL TRENCH 4'WIDE x 2'DEEP PER DETAIL ON SHEET 38
(88) CONSTRUCT BASIN OUTLET STRUCTURE PER DETAILS ON SHEETS 40 & 41

CONSTRUCTION DRAWING SET DATED 22 JUNE, 2021

MANHOLE / JUNCTION STRUCTURE DATA

LATERAL	℄ STATION	WALL STATION	STRUCTURE	A	B	C	D_1	D_2	E	F	G	L	ELEV S	ELEV R
LAT-H2	28+78.57	28+77.83	BIFURCATION	116°5'56"	48"	7.7'	90"	90"	–	–	–	–	1317.00	1316.92
CP-5	10+52.74	10+52.74	JS NO. 2	90°	24"	3.8	48"	48"	1.4'	1'	2'	2.8'	1319.28	1320.46

K&A ENGINEERING LAND PLANNING SURVEYING
Engineering, Inc.
357 N SHERIDAN STREET SUITE 117
CORONA, CALIFORNIA 92880
TEL (951) 279-1800
FAX (951) 279-4380

REGISTERED PROFESSIONAL ENGINEER DONALD W. BERGH No. 28949 CIVIL STATE OF CALIFORNIA

Donald Bergh 8/16/2021

ENGINEER R.C.E. 28949 DATE:

COUNTY FILE No. 970-B

COUNTY OF RIVERSIDE TRANSPORTATION DEPARTMENT

RECMD COUNTY OVERSIGHT ENGINEER 8/11/21

APPROVES AS TO COMPLIANCE WITH APPLICABLE COUNTY STANDARDS AND PRACTICES.

REGISTRATION # 76450 DATE SIGNED

Don't Dig...Until You Call U.S.A. Toll Free DIAL 811 for the location of buried utility lines. Don't disrupt vital services.

TWO WORKING DAYS BEFORE YOU DIG

BENCH MARK
NAD83 Epoch 2011, CCS83, ZONE 6-NAVD88(COH88)

RCFC B.M. Z 15502
SET MAG NAIL W/ RCFC WCD TAG FLUSH

E 6,226,565.52 N 2,177,350.50

ELEV.: 1,401.46 SURVEY DATE: 02/2013

REF	DESCRIPTION	APPR	DATE
	REVISIONS		

RIVERSIDE COUNTY FLOOD CONTROL AND WATER CONSERVATION DISTRICT

DESIGNED BY: K&A ENGINEERING
DRAWN BY: ADA
DATE DRAWN: JUNE 2021
PG NUMBER: 226078

RECOMMENDED FOR APPROVAL BY: DATE 7-27-2021

APPROVED BY: DATE 8/4/2021

LAKELAND VILLAGE MDP STORM DRAIN

LAT H1 STA 10+00 TO 11+13.40

LAT H2 STA 9+91.77 TO 10+74.92

PROJECT NO 3-0-00020

DRAWING NO. 3-0207

SHEET NO. 24 OF 65

NOTE: CONTRACTOR SHALL PROTECT IN PLACE ALL UTILITIES CROSSING OR PARALLELING THE STORM DRAIN UNLESS OTHERWISE NOTED.

CAUTION: OVERHEAD LINES

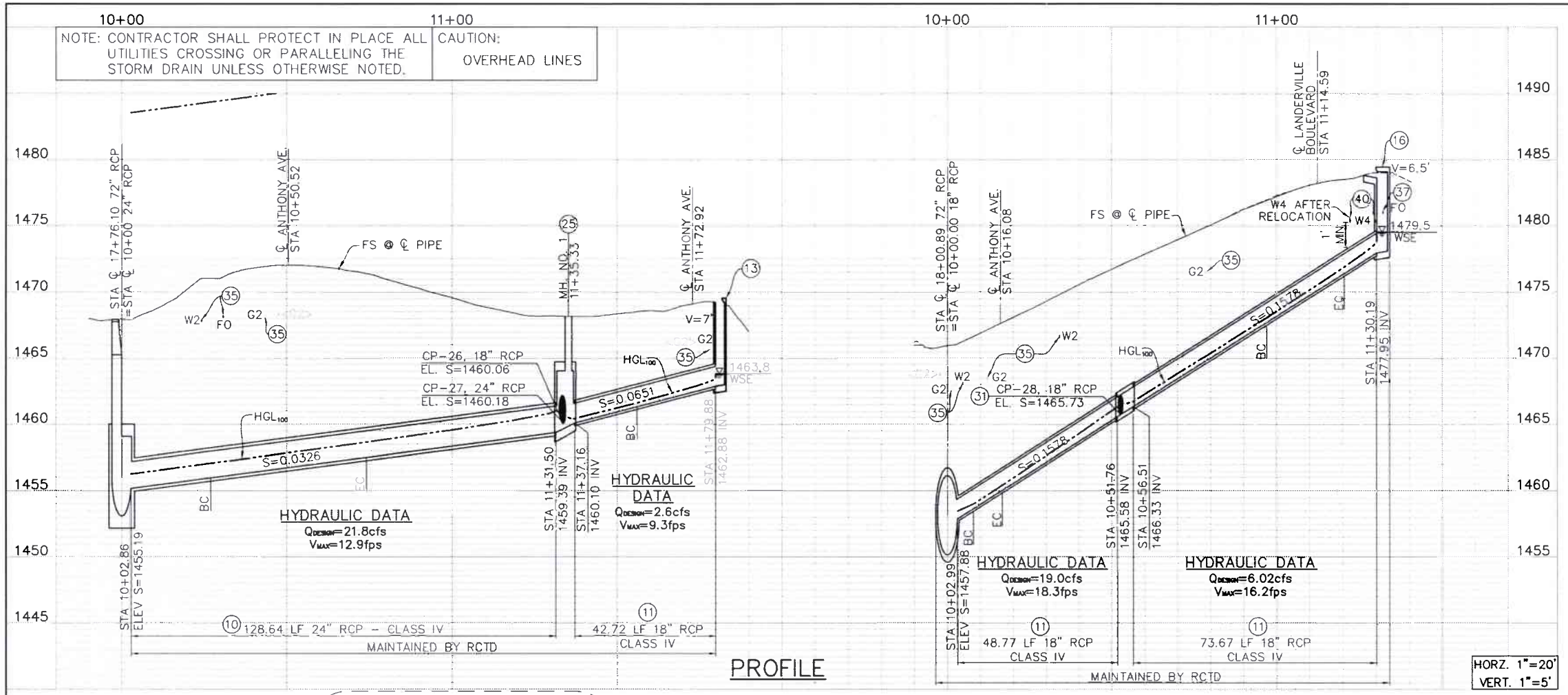

PROFILE

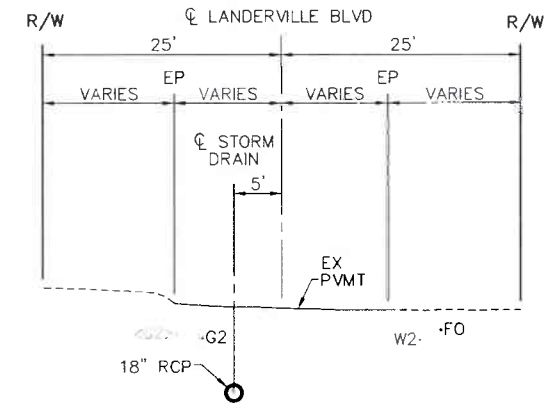

SECTION AT STA 10+85
TYPICAL FROM STA 10+16.68 TO STA 10+96.90
10' 0' 10'
SCALE 1"=10'

LEGEND

- B-X = SOIL BORING LOCATION
- PHX = POTHOLE LOCATION MARCH 2018
- PHX = MARKED FOR POTHOLE, NOTHING FOUND
- PHX = POTHOLE LOCATION JULY 2018
- PHX = MARKED FOR POTHOLE, NOTHING FOUND
- MX = POTHOLE LOCATION JUNE 2020
- CP-6 / 27 = CONNECTOR PIPE NUMBER / REFERENCE SHEET NUMBER

CURVE DATA		(A)	(B)	(C)	(D)
R		45'	22.5'	45'	22.5'
Δ		59°59'38"	60°40'11"	11°12'00"	60°
L		47.12'	23.82'	8.80'	23.56'
T		25.98'	13.17'	4.41	12.99'
B.C.		STA 10+26.95	STA 11+56.05	STA 10+07.89	STA 10+96.90
E.C.		STA 10+74.07	STA 11+79.88	STA 10+16.68	STA 11+20.47
P.I.	NORTHING	2176610.83	2176610.59	2176620.714	2176523.09
	EASTING	6226390.28	6226511.41	6226357.578	6226357.393

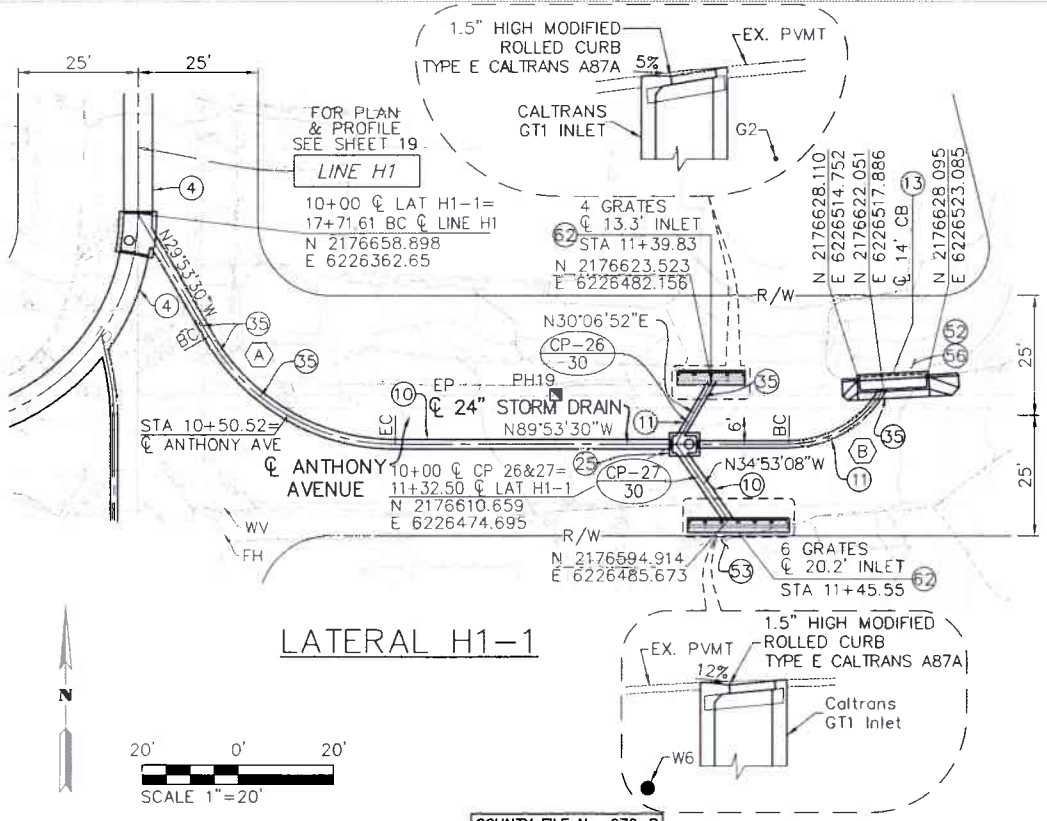

LATERAL H1-1

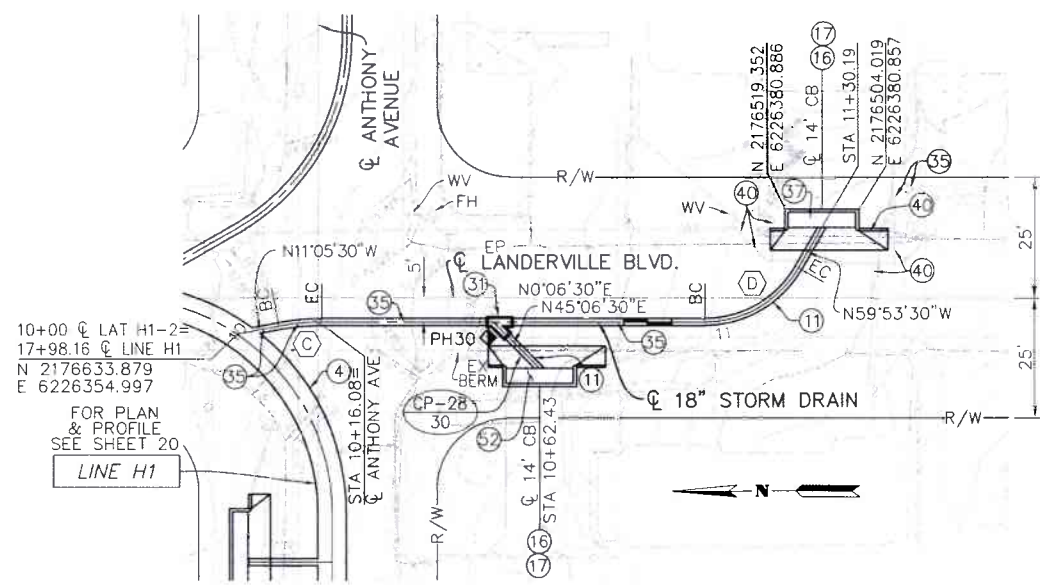

LATERAL H1-2

PLAN

CONSTRUCTION NOTES

- (4) CONSTRUCT 72" RCP
- (10) CONSTRUCT 24" RCP
- (11) CONSTRUCT 18" RCP
- (13) CONSTRUCT COBINATION INLET CATCH BASIN NO.2 PER RCTD STD. NO. 302 WITH GUTTER DEPRESSION FOR GRATED OPENING CATCH BASIN PER RCTD STD. NO. 312, CASE A
- (16) CONSTRUCT CATCH BASIN NO.1 PER RCFC&WCD STD. CB100
- (17) CONSTRUCT LOCAL DEPRESSION NO.2 PER RCFC&WCD STD. LD201
- (25) CONSTRUCT MANHOLE NO.1 PER RCFC&WCD STD. MH251
- (31) CONSTRUCT TS NO.3 PER RCFC&WCD STD. TS303
- (35) PROTECT IN PLACE
- (37) FIBER OPTIC TO BE RELOCATED BY FRONTIER PRIOR TO CONSTRUCTION
- (40) RELOCATE WATER (SIZE PER PLAN) PER WATER IMPROVEMENT PLAN ON SHEETS W1-W5
- (52) REMOVE INTERFERING PORTIONS OF VEGETATION WITHIN RIGHT-OF-WAY
- (53) REMOVE, LEGALLY DISPOSE OF & RECONSTRUCT INTERFERING PORTIONS OF DRIVEWAY PER PAVING PLAN
- (56) REMOVE & RELOCATE GARDEN FEATURES AS REQUIRED FOR CONSTRUCTION
- (62) CONSTRUCT DRAINAGE INLET TYPE "GT1" PER CALTRANS STD. D73D WITH TYPE "18-10" BICYCLE & PEDESTRIAN PROOF GRATES PER CALTRANS STD. D77B, USE MODIFIED ROLLED CURB PER CALTRANS STD. A87A WITH 1.5" HIGH CURB; CP-26 4 GRATES, CP-27 6 GRATES

CONSTRUCTION DRAWING SET DATED 22 JUNE, 2021

MANHOLE / JUNCTION STRUCTURE DATA

LATERAL	℄ STATION	WALL STATION	STRUCTURE	A	B	C	D	E	F	G	L	ELEV S	ELEV R
CP-26	11+32.50	11+33.51	MH NO. 1	60'	–	–	–	–	–	–	–	1460.06	–
CP-27	11+32.50	11+33.73	MH NO. 1	55'	–	–	–	–	–	–	–	1460.18	–
CP-28	10+52.76	10+53.51	TS NO. 3	45'	18"	4.4'	18"	–	–	–	–	1466.07	1467.65

COUNTY FILE No. 970-B

COUNTY OF RIVERSIDE TRANSPORTATION DEPARTMENT

RECMD COUNTY OVERSIGHT ENGINEER 8/11/21

APPROVES AS TO COMPLIANCE WITH APPLICABLE COUNTY STANDARDS AND PRACTICES.

REGISTRATION # 76450 DATE SIGNED

Don't Dig...Until You Call U.S.A. Toll Free DIAL 811 for the location of buried utility lines. Don't disrupt vital services.

TWO WORKING DAYS BEFORE YOU DIG

BENCH MARK
NAD83 Epoch 2011, CCS83, ZONE 6-NAVD88(COH88)

RCFC B.M. Z 15502
SET MAG NAIL W/ RCFC WCD TAG FLUSH

E 6,226,565.52 N 2,177,350.50

ELEV.: 1,401.46 SURVEY DATE: 02/2013

REVISIONS

REF.	DESCRIPTION	APPR	DATE

K&A ENGINEERING LAND PLANNING SURVEYING
Engineering, Inc.
357 N. SHERIDAN STREET SUITE 117 CORONA, CALIFORNIA 92880 TEL. (951) 279-1800 FAX (951) 279-4380

REGISTERED PROFESSIONAL ENGINEER DONALD W. BOYCE No. 28949 CIVIL STATE OF CALIFORNIA

Donald Boyce 8/16/2021

ENGINEER R.C.E. 28949 DATE

DESIGNED BY: K&A ENGINEERING
DRAWN BY: ADA
DATE DRAWN: JUNE 2021
P8 NUMBER: 226078

RIVERSIDE COUNTY FLOOD CONTROL AND WATER CONSERVATION DISTRICT

RECOMMENDED FOR APPROVAL BY: DATE 7-27-2021

APPROVED BY: DATE: 8/4/2021

LAKELAND VILLAGE MDP STORM DRAIN

LAT H1-1 STA 10+00 TO 11+82.25

LAT H1-2 STA 10+00 TO 11+30.19

PROJECT NO. 3-0-00020

DRAWING NO. 3-0207

SHEET NO. 25 OF 65

NOTE: CONTRACTOR SHALL PROTECT IN PLACE ALL UTILITIES CROSSING OR PARALLELING THE STORM DRAIN UNLESS OTHERWISE NOTED.

CAUTION: OVERHEAD LINES

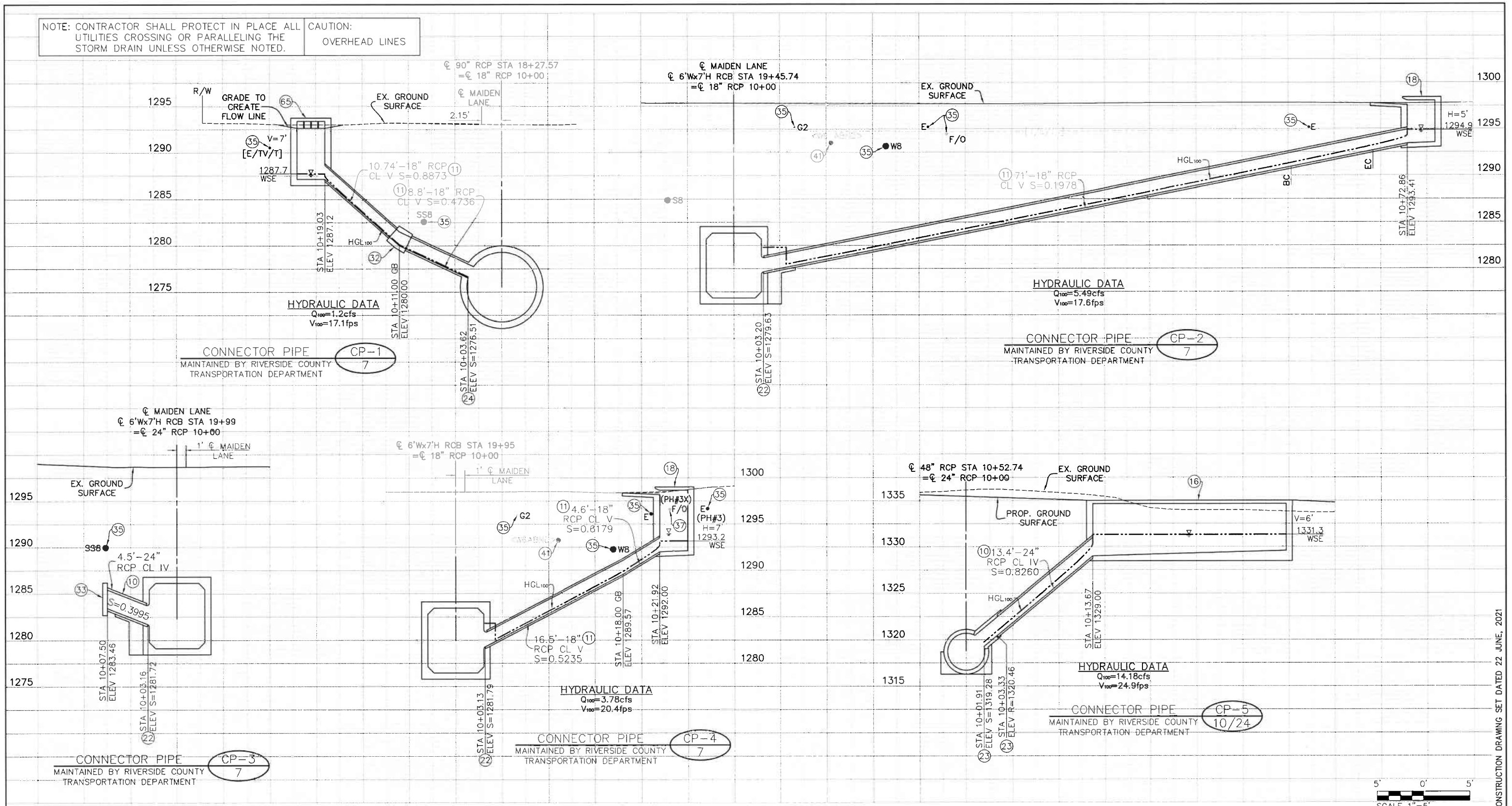

CONSTRUCTION DRAWING SET DATED 22 JUNE, 2021

CONSTRUCTION NOTES

(10) CONSTRUCT 24" RCP

(11) CONSTRUCT 18" RCP

(16) CONSTRUCT CATCH BASIN NO.1 PER RCFC&WCD STD. CB100

(18) CONSTRUCT CATCH BASIN PER RCTD STD. NO. 300 & PER DETAIL ON SHEET 3

(22) CONSTRUCT JS NO.3 PER RCFC&WCD STD. JS228

(23) CONSTRUCT JS NO.2 PER RCFC&WCD STD. JS227

(24) CONSTRUCT JS NO.4 PER RCFC&WCD STD. JS229

(32) CONSTRUCT CONCRETE COLLAR PER RCFC&WCD STD. M803

(33) CONSTRUCT CONCRETE BULKHEAD PER RCFC&WCD STD. M816

(35) PROTECT IN PLACE

(37) FIBER OPTIC TO BE RELOCATED BY FRONTIER PRIOR TO CONSTRUCTION

(41) VERIFY PLOTTED UTILITY IS IN THIS LOCATION, IF FOUND, VERIFY IF ABANDONED & REMOVE AS NEEDED

(65) CONSTRUCT CONCRETE DROP INLET PER RCFC&WCD STD. CB110

K&A Engineering, Inc.
ENGINEERING
LAND PLANNING
SURVEYING
357 N. SHERIDAN STREET
SUITE 117
CORONA, CALIFORNIA 92880
TEL. (951) 279-1800
FAX (951) 279-4380

REGISTERED PROFESSIONAL ENGINEER DONALD W. BERGH No. 28949 CIVIL STATE OF CALIFORNIA

Donald Bergh 8/16/2021
ENGINEER R.C.E. 28949 DATE

COUNTY FILE No. 970-B

COUNTY OF RIVERSIDE TRANSPOTATION DEPARTMENT

RECMD COUNTY OVERSIGHT ENGINEER 8/4/21

APPROVES AS TO COMPLIANCE WITH APPLICABLE COUNTY STANDARDS AND PRACTICES.

REGISTRATION # 76450 DATE SIGNED

Don't Dig...Until You Call U.S.A. Toll Free DIAL 811 for the location of buried utility lines. Don't disrupt vital services.

TWO WORKING DAYS BEFORE YOU DIG

BENCH MARK
NAD83 Epoch 2011, CCS83, ZONE 6-
NAVD88(COH88)
RCFC B.M. Z 15502
SET MAG NAIL W/ RCFC WCD TAG FLUSH
E 6,226,565.52 N 2,177,350.50
ELEV: 1,401.46 SURVEY DATE: 02/2013

REF	DESCRIPTION	APPR.	DATE
	REVISIONS		

RIVERSIDE COUNTY FLOOD CONTROL AND WATER CONSERVATION DISTRICT

DESIGNED BY: K&A ENGINEERING
DRAWN BY: ADA
DATE DRAWN: JUNE 2021
P8 NUMBER: 226078

RECOMMENDED FOR APPROVAL BY: DATE 7-27-2021

APPROVED BY: DATE 8/4/2021

LAKELAND VILLAGE MDP LINE H

STORM DRAIN CONNECTOR PIPE PROFILES

PROJECT NO. 3-0-00020

DRAWING NO. 3-0207

SHEET NO. 26 OF 65

NOTE: CONTRACTOR SHALL PROTECT IN PLACE ALL UTILITIES CROSSING OR PARALLELING THE STORM DRAIN UNLESS OTHERWISE NOTED.

CAUTION: OVERHEAD LINES

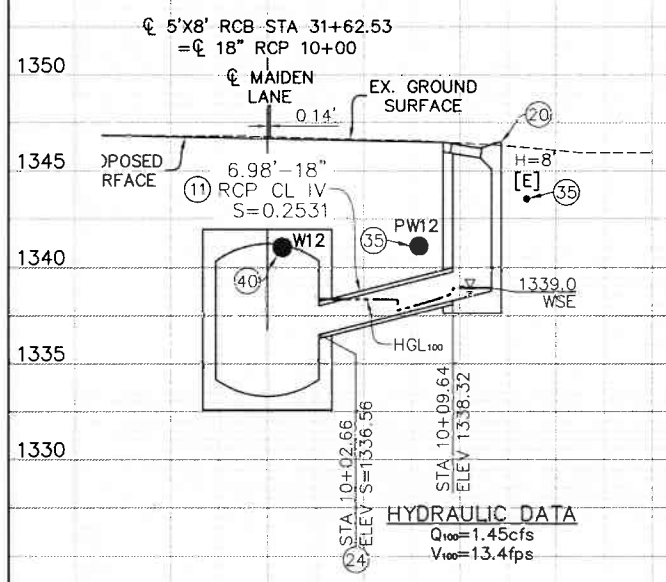

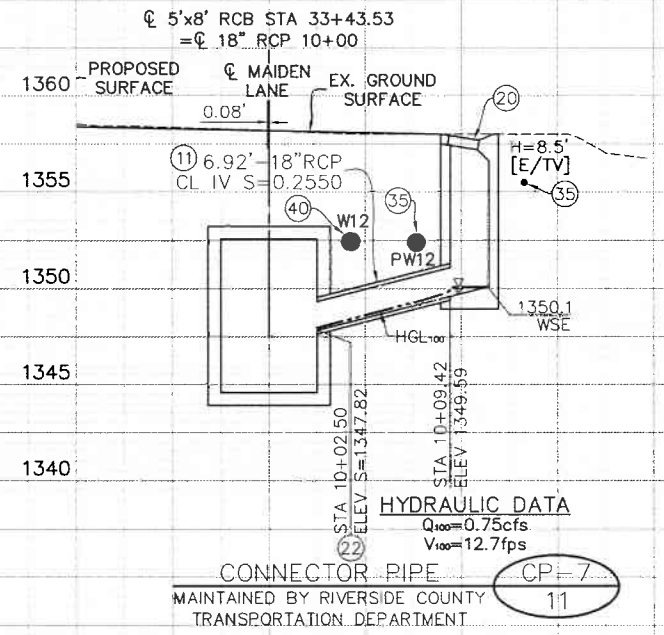

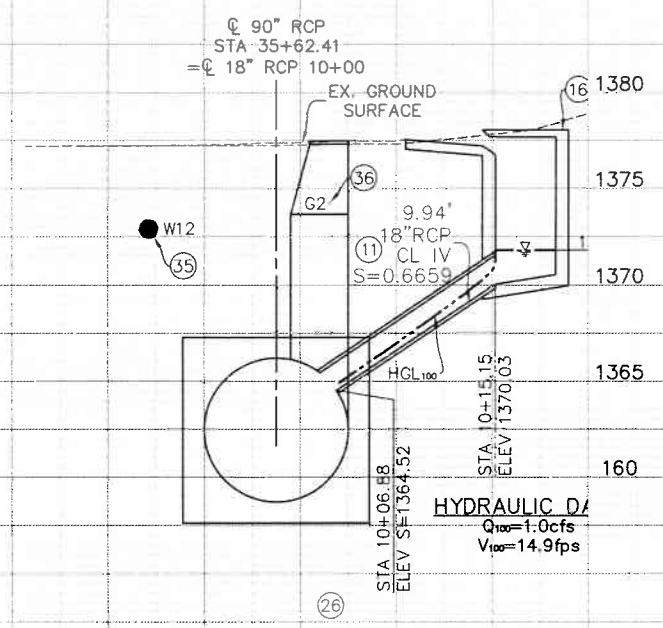

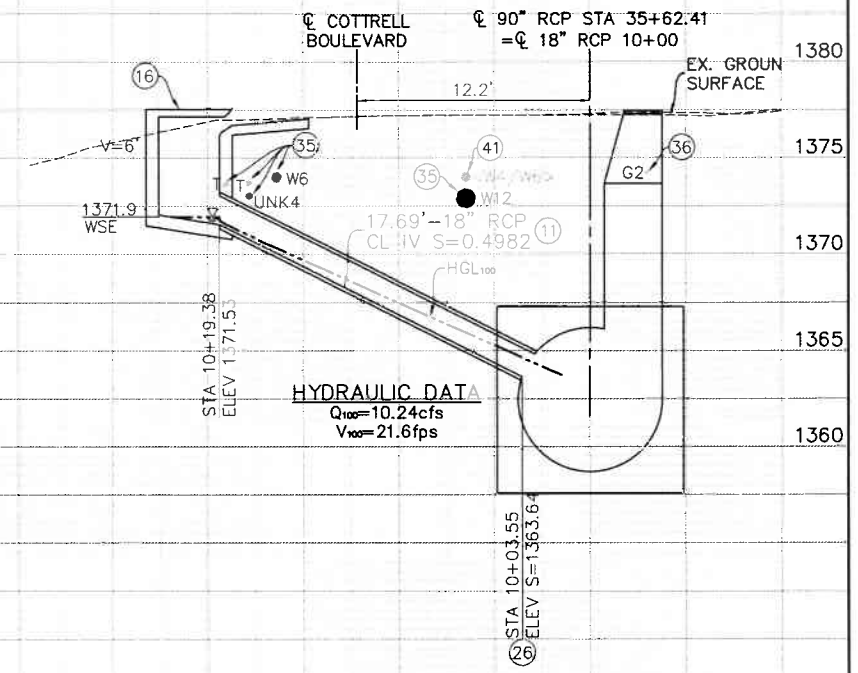

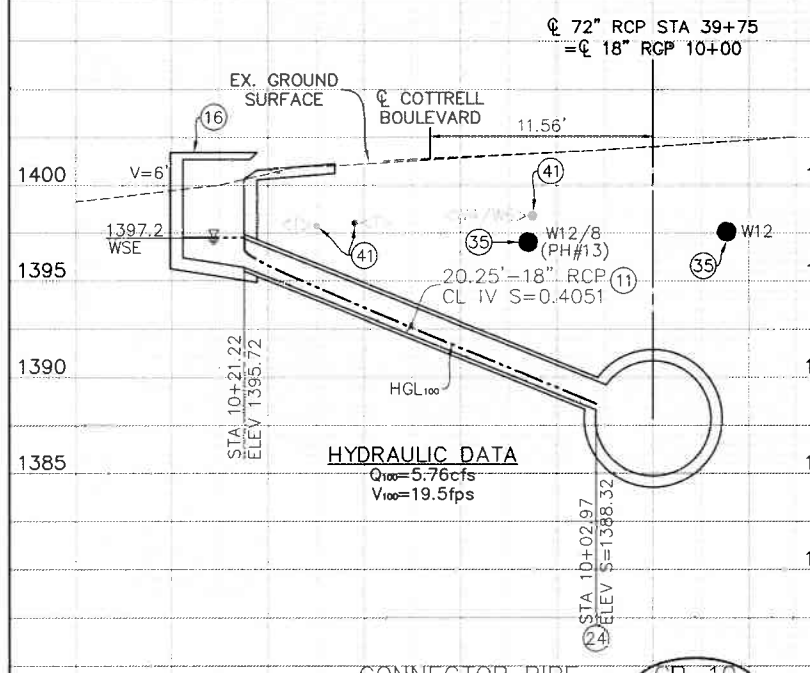

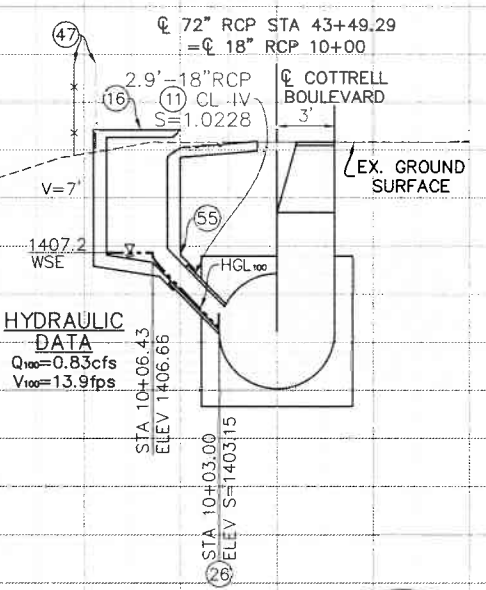

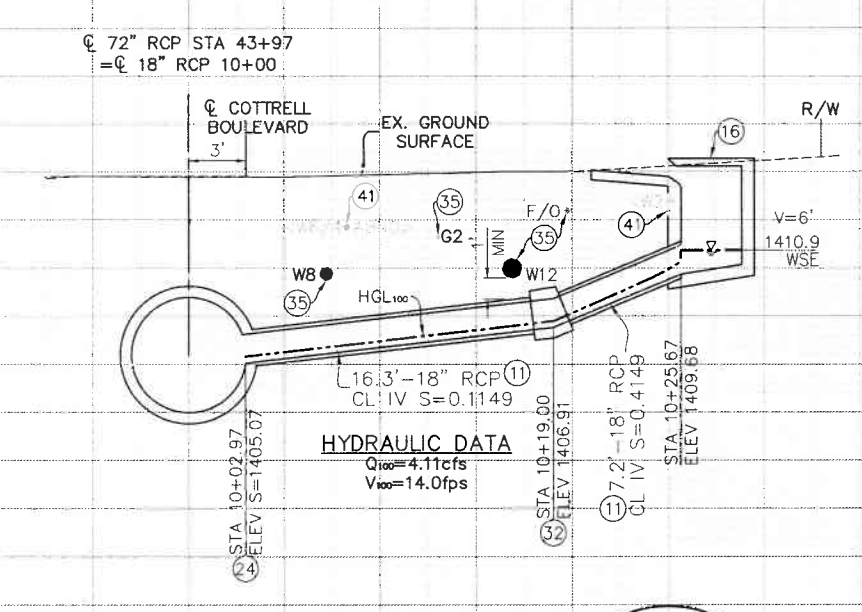

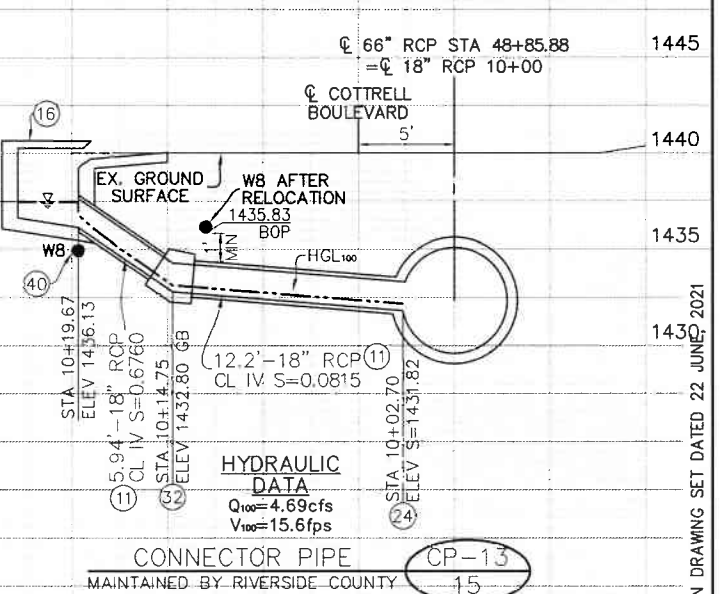

SCALE 1"=5'

CONSTRUCTION DRAWING SET DATED 22 JUNE, 2021

CONSTRUCTION NOTES

(11) CONSTRUCT 18" RCP

(16) CONSTRUCT CATCH BASIN NO.1 PER RCFC&WCD STD. CB100

(20) CONSTRUCT DRAINAGE INLET TYPE "G6" PER CALTRANS STD. D73B WITH TYPE "18-10" BICYCLE & PEDESTRIAN PROOF GRATE PER CALTRANS STD. D77B

(24) CONSTRUCT JS NO.4 PER RCFC&WCD STD. JS229

(26) CONSTRUCT MANHOLE NO.2 PER RCFC&WCD STD. MH252

(32) CONSTRUCT CONCRETE COLLAR PER RCFC&WCD STD. M803

(35) PROTECT IN PLACE

(36) EXISTING 2" GAS LINE (PROTECT IN PLACE)

(40) RELOCATE WATER PER WATER IMPROVEMENT PLAN ON SHEETS W1-W5

(41) VERIFY PLOTTED UTILITY IS IN THIS LOCATION, IF FOUND, VERIFY IF ABANDONED & REMOVE AS NEEDED

(47) FENCE TO BE SALVAGED OR REPLACED IN KIND (SEE NOTE ON PLAN)

(55) CONSTRUCT SPECIAL CONNECTION TO CATCH BASIN PER RCFC&WCD STD. CB109

K&A Engineering, Inc.
ENGINEERING
LAND PLANNING
SURVEYING
357 N. SHERIDAN STREET
SUITE 117
CORONA, CALIFORNIA 92880
TEL. (951) 279-1800
FAX (951) 279-4380

REGISTERED PROFESSIONAL ENGINEER DONALD W. BOYCH No. 28949 CIVIL STATE OF CALIFORNIA

Donald Boych 8/16/2021

ENGINEER R.C.E 28949 DATE

COUNTY FILE No. 970-B

COUNTY OF RIVERSIDE TRANSPOTATION DEPARTMENT

RECMD COUNTY OVERSIGHT ENGINEER 8/11/21

APPROVES AS TO COMPLIANCE WITH APPLICABLE COUNTY STANDARDS AND PRACTICES.

REGISTRATION # 76450 DATE SIGNED

Don't Dig...Until You Call U.S.A. Toll Free DIAL 811 for the location of buried utility lines. Don't disrupt vital services.

BURIED CABLE

TWO WORKING DAYS BEFORE YOU DIG

BENCH MARK
NAD83 Epoch 2011, CCS83, ZONE 6-
NAVD88(COH88)

RCFC B.M. Z 15502
SET MAG NAIL W/ RCFC WCD TAG FLUSH

E 6,226,565.52 N 2,177,350.50

ELEV: 1,401.46 SURVEY DATE: 02/2013

REF.	DESCRIPTION	APPR.	DATE

REVISIONS

RIVERSIDE COUNTY FLOOD CONTROL AND WATER CONSERVATION DISTRICT

DESIGNED BY: K&A ENGINEERING
DRAWN BY: ADA
DATE DRAWN: JUNE 2021
PB NUMBER: 226078

RECOMMENDED FOR APPROVAL BY: DATE 7-27-2021

APPROVED BY: DATE 8/4/2021

LAKELAND VILLAGE MDP LINE H

STORM DRAIN CONNECTOR PIPE PROFILES

PROJECT NO. 3-0-00020

DRAWING NO. 3-0207

SHEET NO. 27 OF 65

NOTE: CONTRACTOR SHALL PROTECT IN PLACE ALL UTILITIES CROSSING OR PARALLELING THE STORM DRAIN UNLESS OTHERWISE NOTED.

CAUTION: OVERHEAD LINES

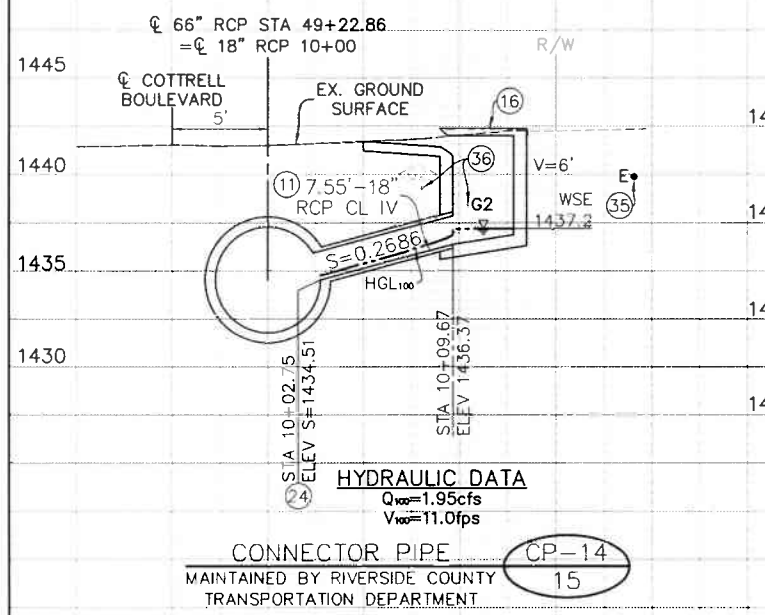

CONNECTOR PIPE CP-14 / 15
MAINTAINED BY RIVERSIDE COUNTY TRANSPORTATION DEPARTMENT

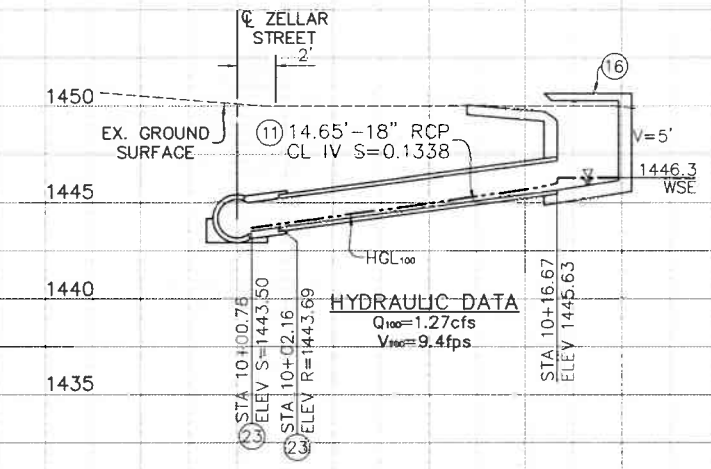

CONNECTOR PIPE CP-15 / 21
MAINTAINED BY RIVERSIDE COUNTY TRANSPORTATION DEPARTMENT

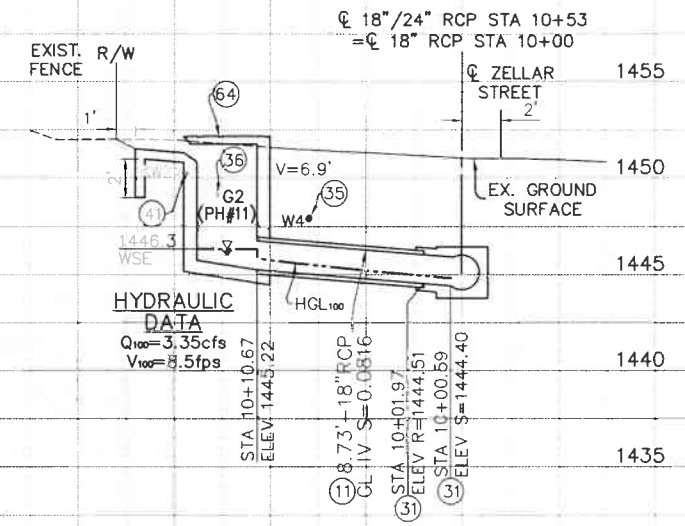

CONNECTOR PIPE CP-16 / 21
MAINTAINED BY RIVERSIDE COUNTY TRANSPORTATION DEPARTMENT

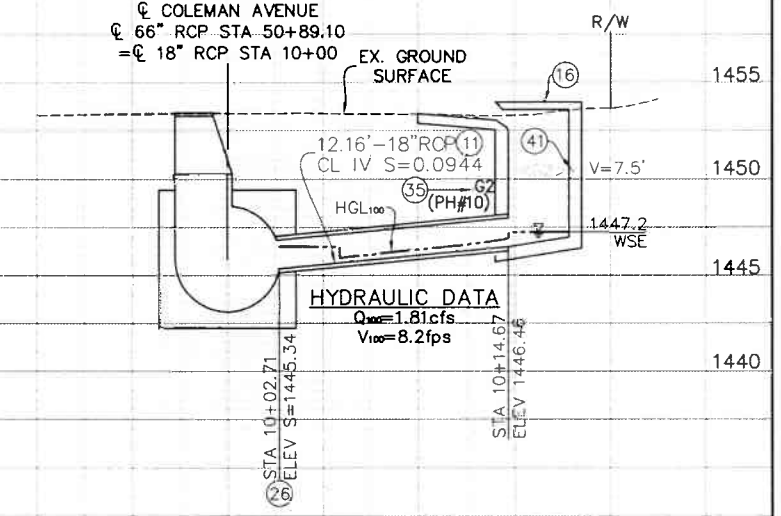

CONNECTOR PIPE CP-17 / 16
MAINTAINED BY RIVERSIDE COUNTY TRANSPORTATION DEPARTMENT

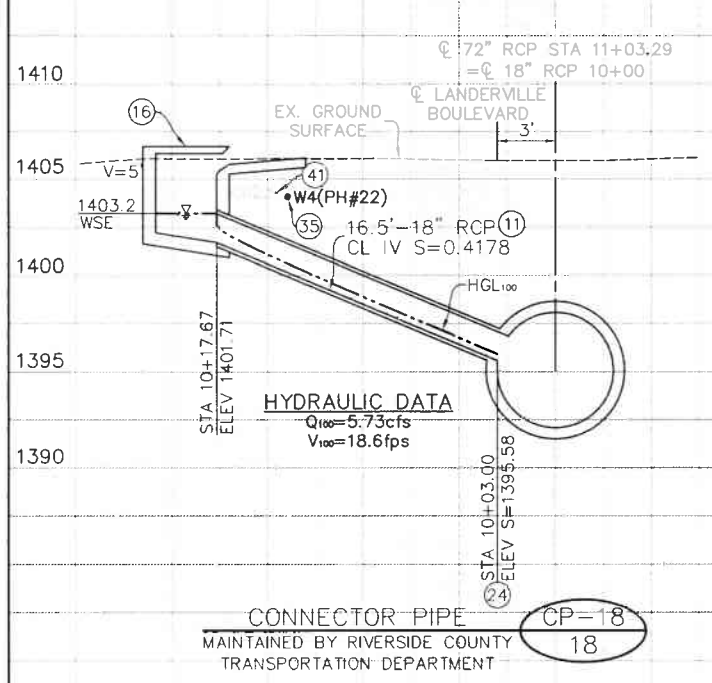

CONNECTOR PIPE CP-18 / 18
MAINTAINED BY RIVERSIDE COUNTY TRANSPORTATION DEPARTMENT

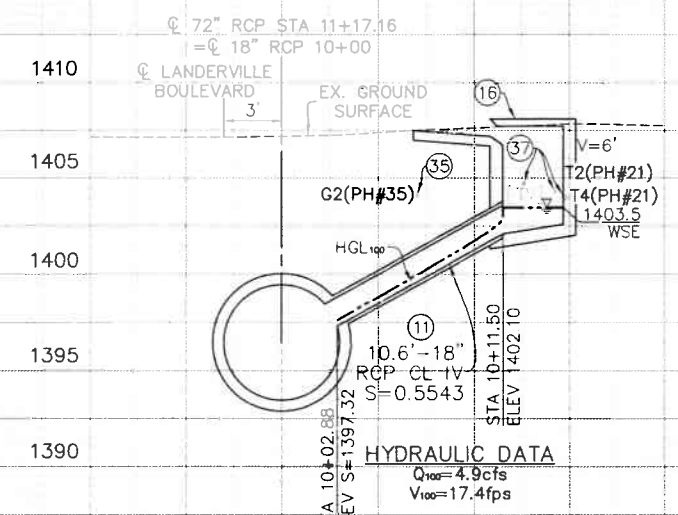

CONNECTOR PIPE CP-19 / 18
MAINTAINED BY RIVERSIDE COUNTY TRANSPORTATION DEPARTMENT

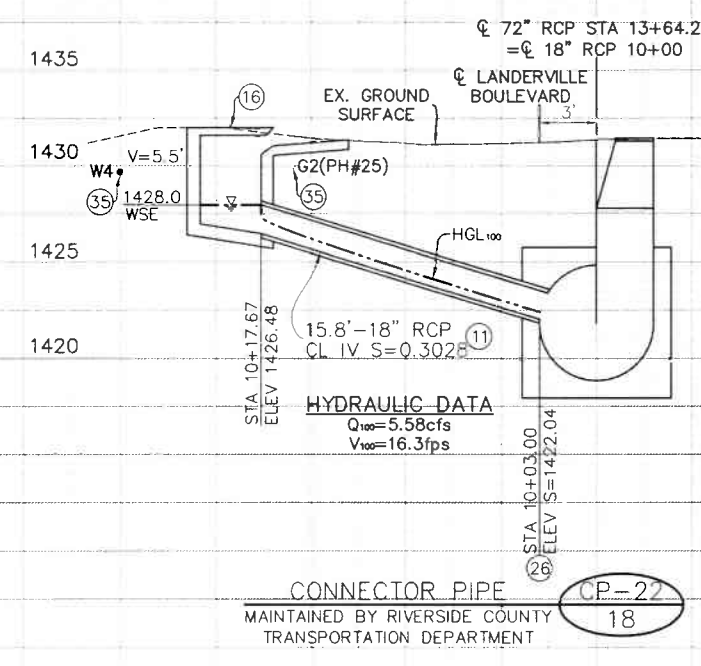

CONNECTOR PIPE CP-22 / 18
MAINTAINED BY RIVERSIDE COUNTY TRANSPORTATION DEPARTMENT

5' 0' 5'
SCALE 1"=5'

CONSTRUCTION DRAWING SET DATED 22 JUNE, 2021

CONSTRUCTION NOTES

(11) CONSTRUCT 18" RCP
(16) CONSTRUCT CATCH BASIN NO.1 PER RCFC&WCD STD. CB100
(23) CONSTRUCT JS NO.2 PER RCFC&WCD STD. JS227
(24) CONSTRUCT JS NO.4 PER RCFC&WCD STD. JS229
(26) CONSTRUCT MANHOLE NO.2 PER RCFC&WCD STD. MH252
(31) CONSTRUCT TS NO.3 PER RCFC&WCD STD. TS303
(35) PROTECT IN PLACE
(36) EXISTING 2" GAS LINE (PROTECT IN PLACE)
(37) FIBER OPTIC TO BE RELOCATED BY FRONTIER PRIOR TO CONSTRUCTION
(41) VERIFY PLOTTED UTILITY IS IN THIS LOCATION, IF FOUND, VERIFY IF ABANDONED & REMOVE AS NEEDED
(64) CONSTRUCT MODIFIED CATCH BASIN NO.1 PER RCFC&WCD STD. CB100 & LOCAL DEPRESSION NO.2 PER RCFC&WCD STD. LD201 & DETAIL ON SHEET 21

K&A Engineering, Inc.
ENGINEERING / LAND PLANNING / SURVEYING
357 N. SHERIDAN STREET SUITE 117
CORONA, CALIFORNIA 92880
TEL (951) 279-1800
FAX (951) 279-4380

REGISTERED PROFESSIONAL ENGINEER DONALD W. BERGH No. 28949 CIVIL STATE OF CALIFORNIA

Donald Bergh 8/16/2021
ENGINEER R.C.E 28949 DATE

COUNTY FILE No. 970-B
COUNTY OF RIVERSIDE TRANSPOTATION DEPARTMENT
RECMD COUNTY OVERSIGHT ENGINEER 8/11/21
APPROVES AS TO COMPLIANCE WITH APPLICABLE COUNTY STANDARDS AND PRACTICES.
REGISTRATION # 76450 DATE SIGNED

Don't Dig...Until You Call U.S.A. Toll Free DIAL 811 for the location of buried utility lines. Don't disrupt vital services.
BURIED CABLE
TWO WORKING DAYS BEFORE YOU DIG

BENCH MARK
NAD83 Epoch 2011, CCS83, ZONE 6-NAVD88(CORH88)
RCFC B.M. Z 15502
SET MAG NAIL W/ RCFC WCD TAG FLUSH
E 6,226,565.52 N 2,177,350.50
ELEV: 1,401.46 SURVEY DATE: 02/2013

REF.	DESCRIPTION	APPR.	DATE
	REVISIONS		

RIVERSIDE COUNTY FLOOD CONTROL AND WATER CONSERVATION DISTRICT
DESIGNED BY: K&A ENGINEERING
DRAWN BY: ADA
DATE DRAWN: JUNE 2021
P8 NUMBER: 226078
RECOMMENDED FOR APPROVAL BY: DATE 7-27-2021
APPROVED BY: DATE 8/4/2021

LAKELAND VILLAGE MDP LINE H & H1

STORM DRAIN CONNECTOR PIPE PROFILES

PROJECT NO. 3-0-00020
DRAWING NO. 3-0207
SHEET NO. 28 OF 65

NOTE: CONTRACTOR SHALL PROTECT IN PLACE ALL UTILITIES CROSSING OR PARALLELING THE STORM DRAIN UNLESS OTHERWISE NOTED.

CAUTION: OVERHEAD LINES

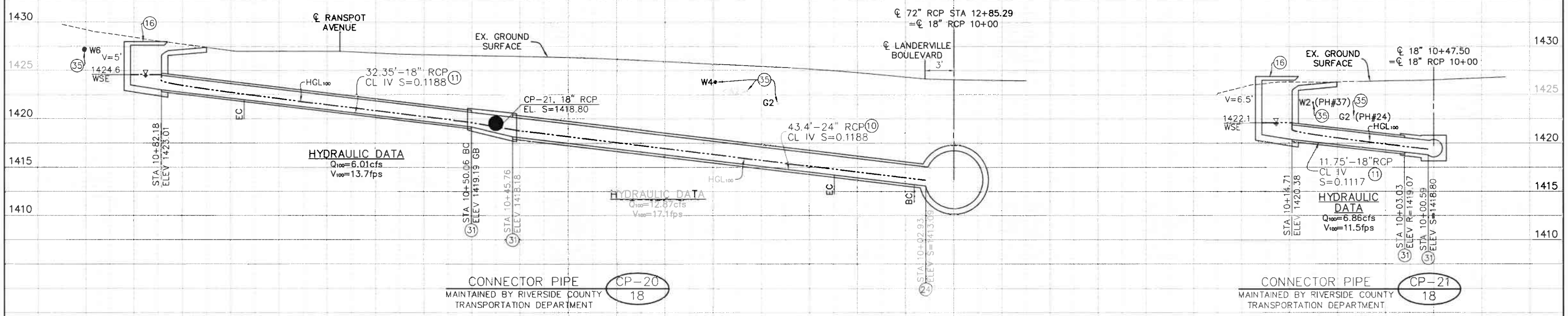

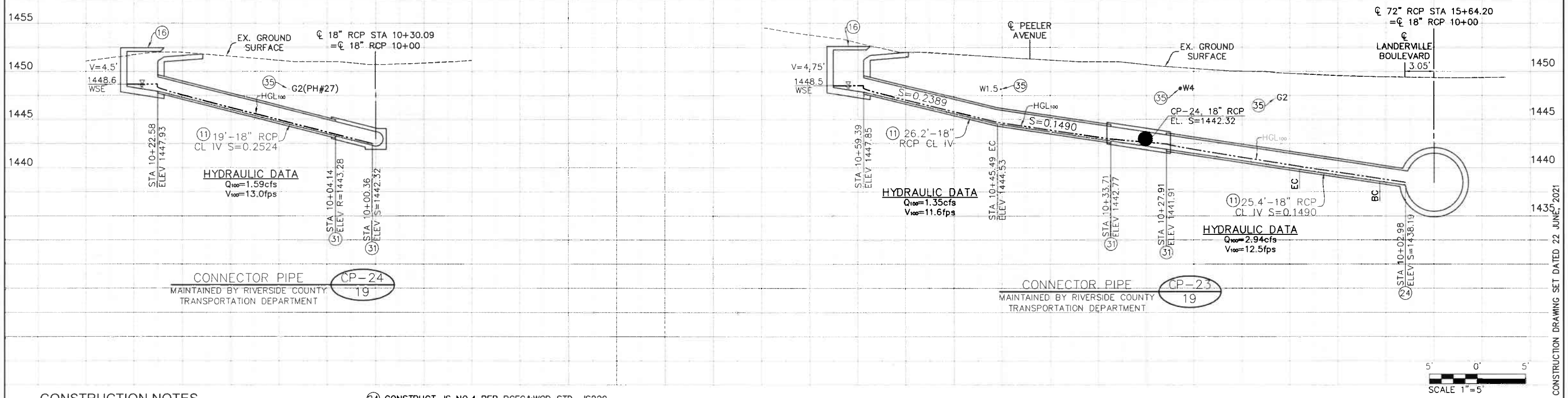

CONSTRUCTION DRAWING SET DATED 22 JUNE, 2021

CONSTRUCTION NOTES

(10) CONSTRUCT 24" RCP

(11) CONSTRUCT 18" RCP

(16) CONSTRUCT CATCH BASIN NO.1 PER RCFC&WCD STD. CB100

(24) CONSTRUCT JS NO.4 PER RCFC&WCD STD. JS229

(31) CONSTRUCT TS NO.3 PER RCFC&WCD STD. TS303

(35) PROTECT IN PLACE

COUNTY FILE No. 970-B

KA Engineering, Inc.
ENGINEERING
LAND PLANNING
SURVEYING
357 N. SHERIDAN STREET
SUITE 117
CORONA, CALIFORNIA 92880
TEL. (951) 279-1800
FAX (951) 279-4380

REGISTERED PROFESSIONAL ENGINEER DONALD W. BERGH No. 28949 CIVIL STATE OF CALIFORNIA

Donald Bergh 8/16/2021

ENGINEER R.C.E. 28949 DATE

COUNTY OF RIVERSIDE TRANSPOTATION DEPARTMENT

RECMD COUNTY OVERSIGHT ENGINEER 8/11/21

APPROVES AS TO COMPLIANCE WITH APPLICABLE COUNTY STANDARDS AND PRACTICES.

REGISTRATION # 76450 DATE SIGNED

Don't Dig...Until You Call U.S.A. Toll Free DIAL 811 for the location of buried utility lines. Don't disrupt vital services.

BURIED CABLE

TWO WORKING DAYS BEFORE YOU DIG

BENCH MARK
NAD83 Epoch 2011, CCS83, ZONE 6-NAVD88(COH88)

RCFC B.M. Z 15502
SET MAG NAIL W/ RCFC WCD TAG FLUSH

E 6,226,565.52 N 2,177,350.50

ELEV.: 1,401.46 SURVEY DATE: 02/2013

REF.	DESCRIPTION	APPR.	DATE
	REVISIONS		

RIVERSIDE COUNTY FLOOD CONTROL AND WATER CONSERVATION DISTRICT

DESIGNED BY: K&A ENGINEERING
DRAWN BY: ADA
DATE DRAWN: JUNE 2021
PB NUMBER: 226078

RECOMMENDED FOR APPROVAL BY: DATE 7-27-2021

APPROVED BY: DATE 8/4/2021

LAKELAND VILLAGE MDP LINE H1

STORM DRAIN CONNECTOR PIPE PROFILES

PROJECT NO. 3-0-00020

DRAWING NO. 3-0207

SHEET NO. 29 OF 65

NOTE: CONTRACTOR SHALL PROTECT IN PLACE ALL UTILITIES CROSSING OR PARALLELING THE STORM DRAIN UNLESS OTHERWISE NOTED.

CAUTION: OVERHEAD LINES

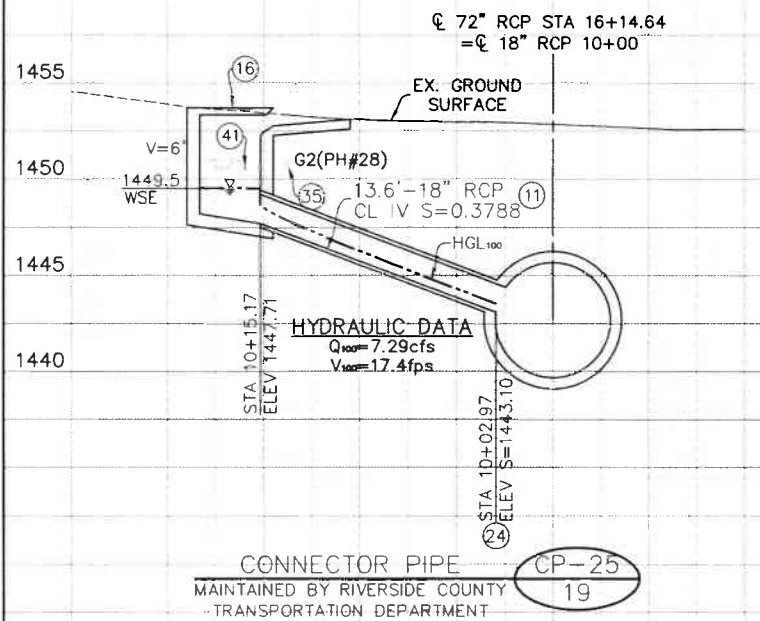

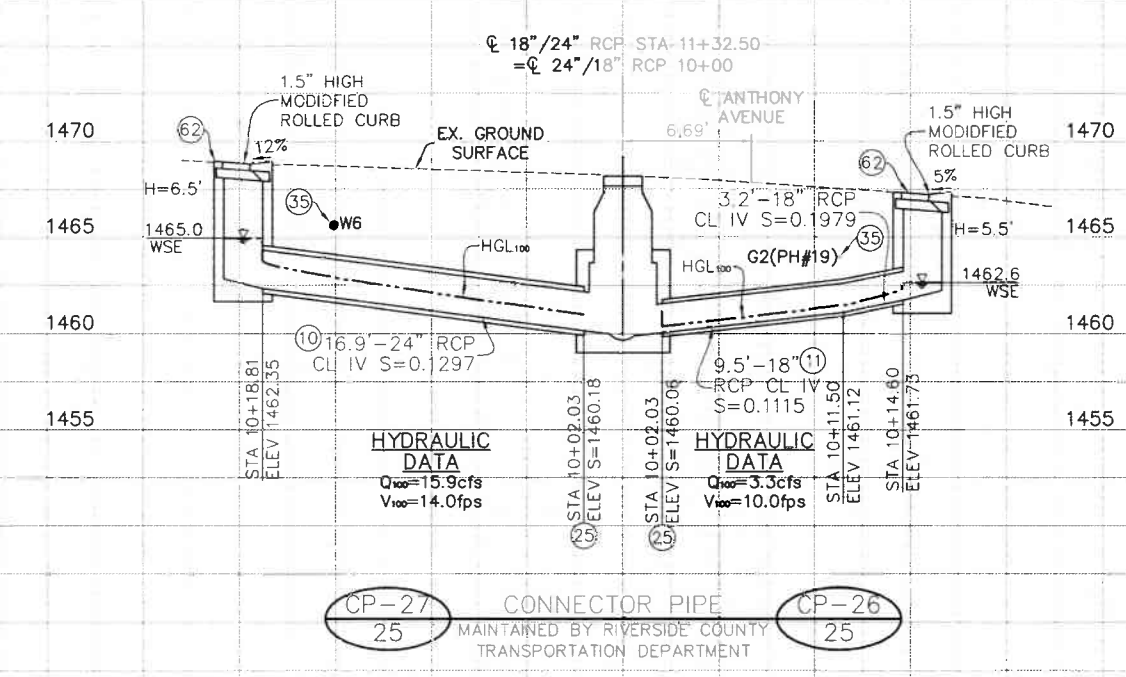

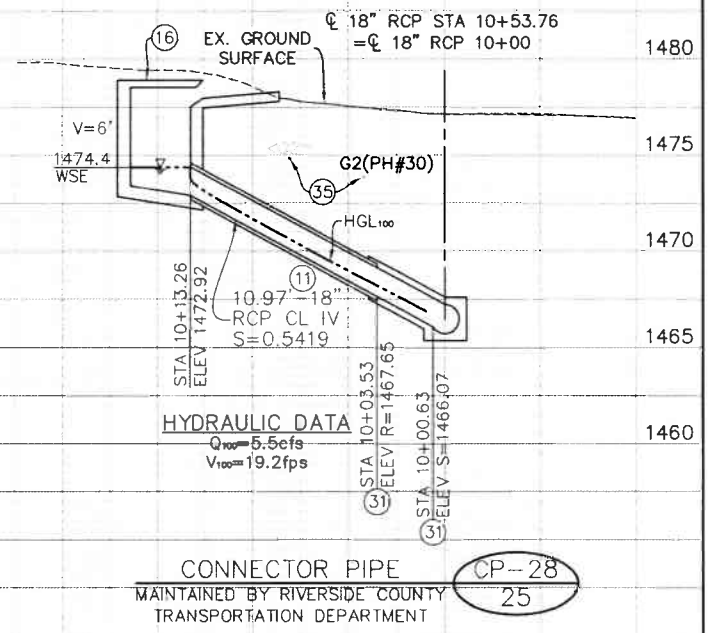

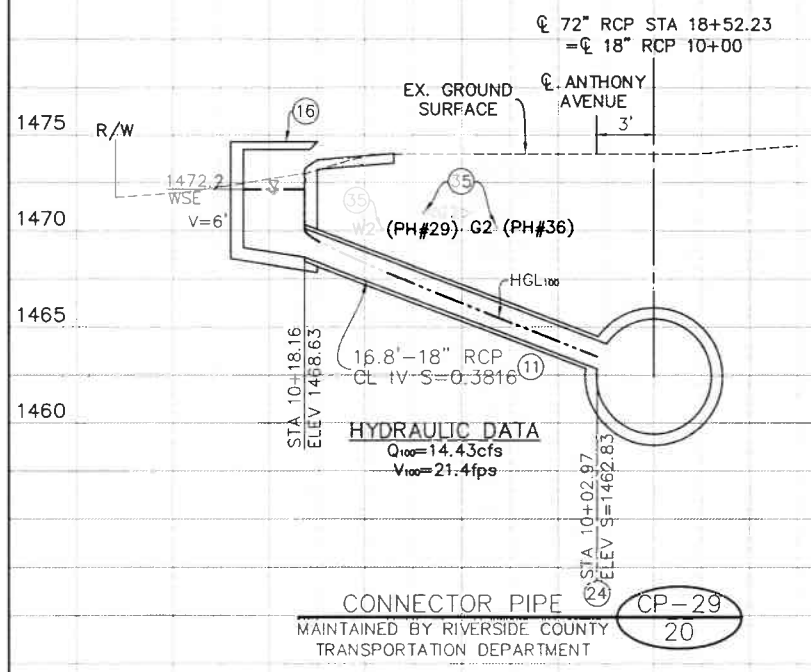

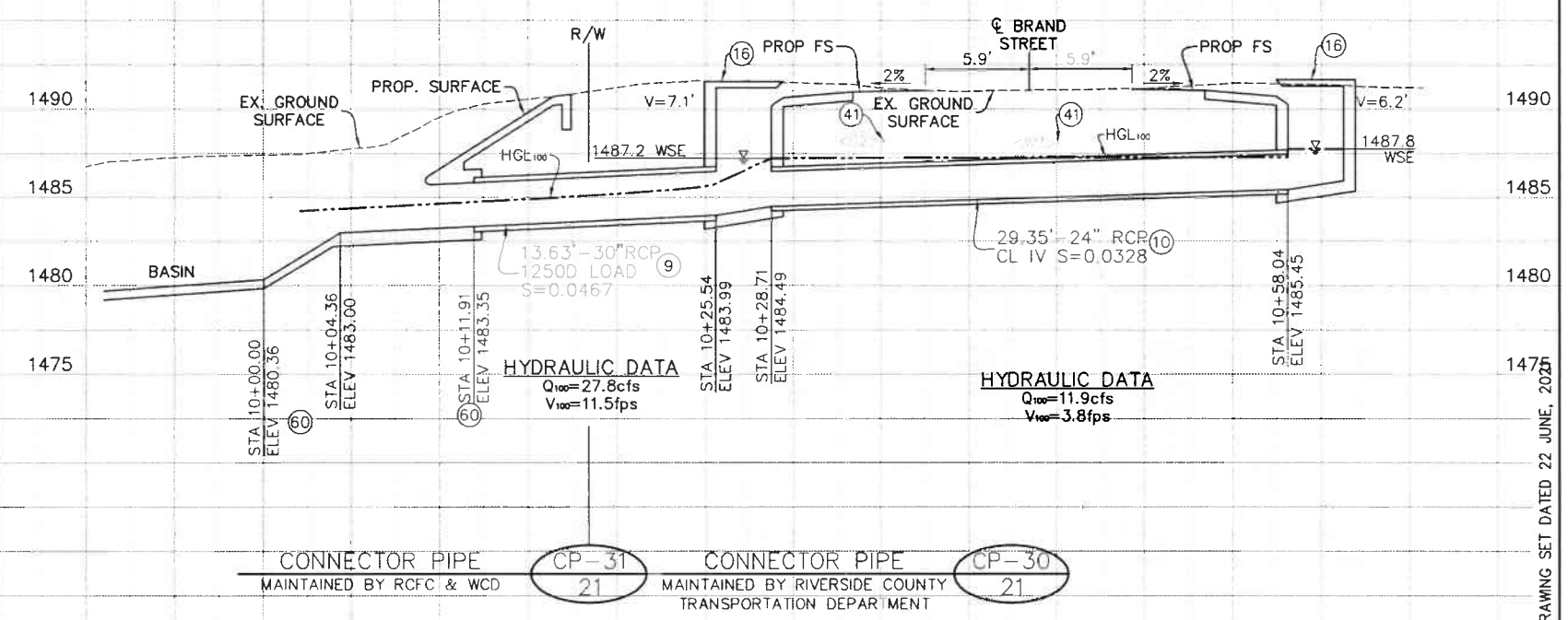

5' 0' 5'
SCALE 1"=5'

CONSTRUCTION DRAWING SET DATED 22 JUNE, 2021

CONSTRUCTION NOTES

(9) CONSTRUCT 30" RCP

(10) CONSTRUCT 24" RCP

(11) CONSTRUCT 18" RCP

(16) CONSTRUCT CATCH BASIN NO.1 PER RCFC&WCD STD. CB100

(23) CONSTRUCT JS NO.2 PER RCFC&WCD STD. JS227

(24) CONSTRUCT JS NO.4 PER RCFC&WCD STD. JS229

(25) CONSTRUCT MANHOLE NO.1 PER RCFC&WCD STD. MH251

(35) PROTECT IN PLACE

(41) VERIFY PLOTTED UTILITY IS IN THIS LOCATION, IF FOUND, VERIFY IF ABANDONED & REMOVE AS NEEDED

(60) CONSTRUCT JS NO.8 PER RCFC&WCD STD. JS233

(62) CONSTRUCT DRAINAGE INLET TYPE "GT1" PER CALTRANS STD. D73D WITH TYPE "18-10" BICYCLE & PEDESTRIAN PROOF GRATES PER CALTRANS STD. D77B, USE MODIFIED ROLLED CURB PER CALTRANS STD. A87A WITH 1.5" HIGH CURB; CP-26 4 GRATES, CP-27 6 GRATES

K&A Engineering, Inc.
ENGINEERING
LAND PLANNING
SURVEYING
357 N. SHERIDAN STREET
SUITE 117
CORONA, CALIFORNIA 92880
TEL. (951) 279-1800
FAX (951) 279-4380

REGISTERED PROFESSIONAL ENGINEER DONALD W. BERGH No. 28949 CIVIL STATE OF CALIFORNIA

Donald Bergh 8/16/2021

ENGINEER R.C.E. 28949 DATE:

COUNTY FILE No. 970-B

COUNTY OF RIVERSIDE TRANSPOTATION DEPARTMENT

RECMD COUNTY OVERSIGHT ENGINEER 8/4/21

APPROVES AS TO COMPLIANCE WITH APPLICABLE COUNTY STANDARDS AND PRACTICES

REGISTRATION # 76450 DATE SIGNED

Don't Dig...Until You Call U.S.A. Toll Free DIAL 811 for the location of buried utility lines. Don't disrupt vital services.

TWO WORKING DAYS BEFORE YOU DIG

BENCH MARK
NAD83 Epoch 2011, CCS83, ZONE 6-
NAVD88(COH88)

RCFC B.M. Z 15502
SET MAG NAIL W/ RCFC WCD TAG FLUSH

E 6,226,565.52 N 2,177,350.50

ELEV.: 1,401.46 SURVEY DATE: 02/2013

REF	DESCRIPTION	APPR	DATE
	REVISIONS		

RIVERSIDE COUNTY FLOOD CONTROL AND WATER CONSERVATION DISTRICT

DESIGNED BY: K&A ENGINEERING
DRAWN BY: ADA
DATE DRAWN: JUNE 2021
PB NUMBER: 226078

RECOMMENDED FOR APPROVAL BY: DATE 7-27-2021

APPROVED BY: DATE: 8/4/2021

LAKELAND VILLAGE MDP LINE H1

STORM DRAIN CONNECTOR PIPE PROFILES

PROJECT NO. 3-0-00020

DRAWING NO. 3-0207

SHEET NO. 30 OF 65

NOTE: CONTRACTOR SHALL PROTECT IN PLACE ALL UTILITIES CROSSING OR PARALLELING THE STORM DRAIN UNLESS OTHERWISE NOTED.

CAUTION: OVERHEAD LINES

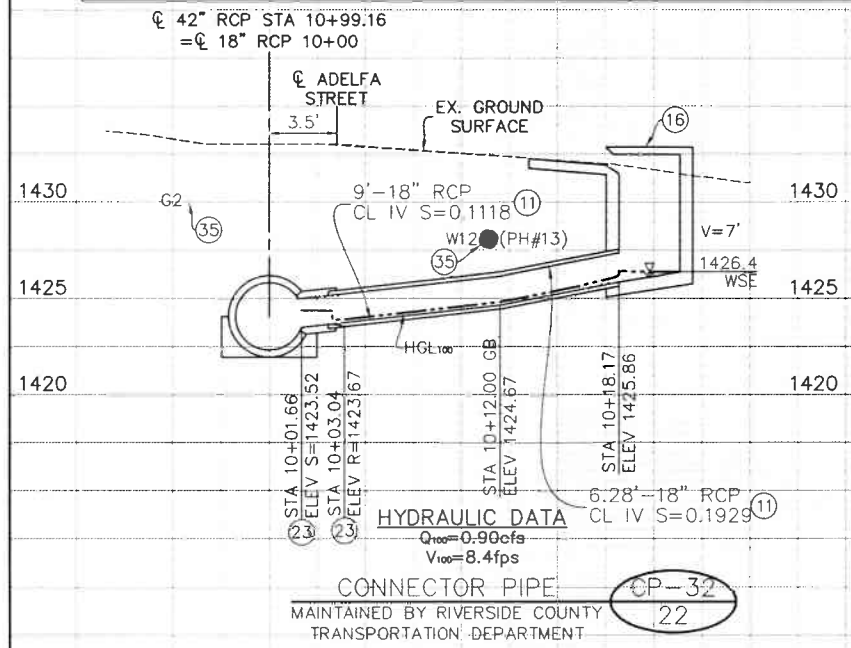

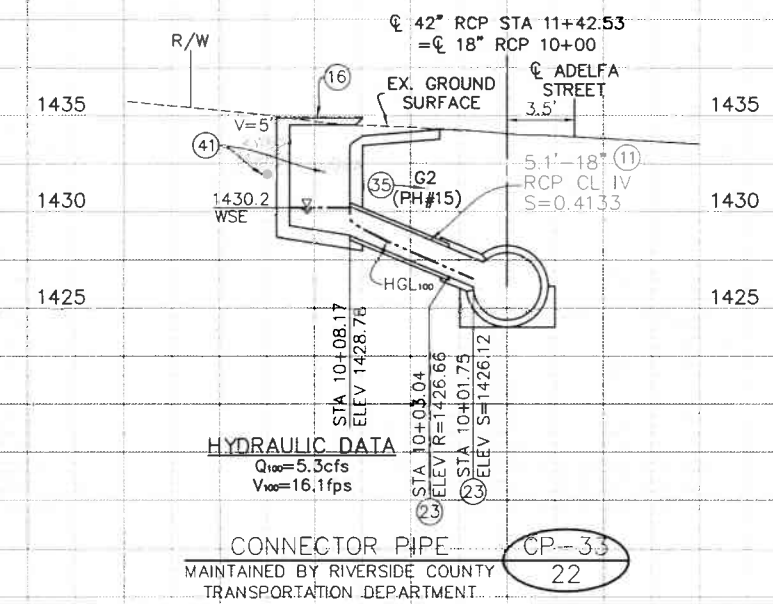

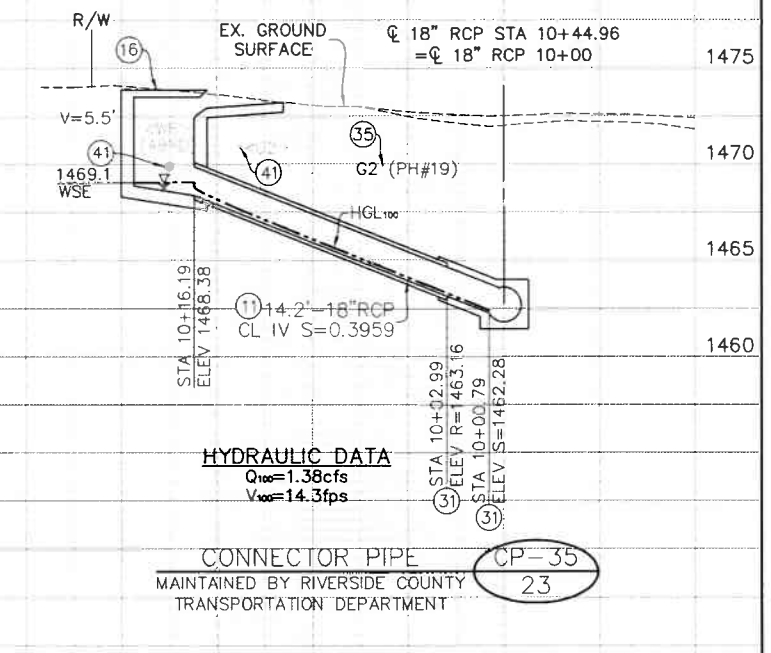

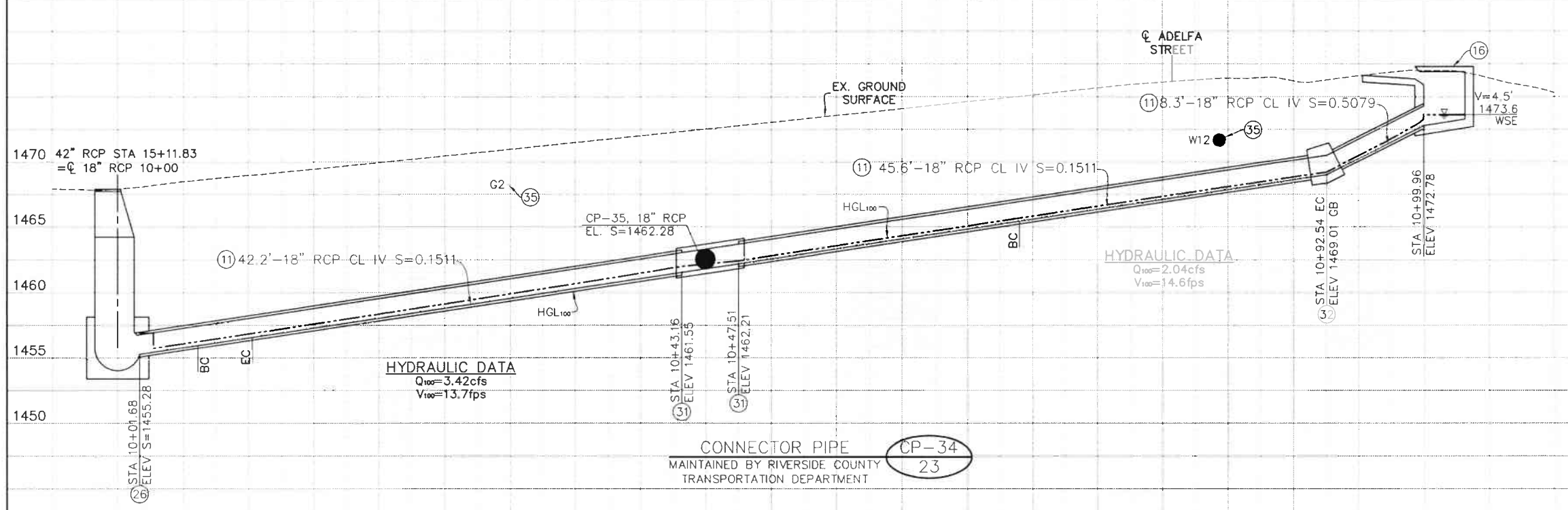

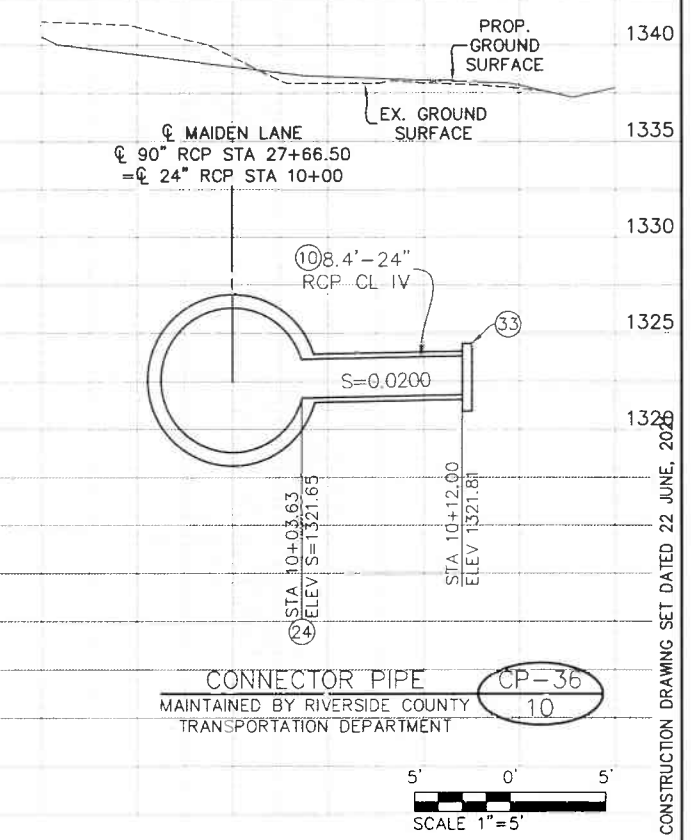

CONSTRUCTION DRAWING SET DATED 22 JUNE, 2021

CONSTRUCTION NOTES

(10) CONSTRUCT 24" RCP

(11) CONSTRUCT 18" RCP

(16) CONSTRUCT CATCH BASIN NO.1 PER RCFC&WCD STD. CB100

(23) CONSTRUCT JS NO.2 PER RCFC&WCD STD. JS227

(24) CONSTRUCT JS NO.4 PER RCFC&WCD STD. JS229

(26) CONSTRUCT MANHOLE NO.2 PER RCFC&WCD STD. MH252

(31) CONSTRUCT TS NO.3 PER RCFC&WCD STD. TS303

(32) CONSTRUCT CONCRETE COLLAR PER RCFC&WCD STD. M803

(33) CONSTRUCT CONCRETE BULKHEAD PER RCFC&WCD STD. M816

(35) PROTECT IN PLACE

(41) VERIFY PLOTTED UTILITY IS IN THIS LOCATION, IF FOUND, VERIFY IF ABANDONED & REMOVE AS NEEDED

K&A Engineering, Inc.
ENGINEERING
LAND PLANNING
SURVEYING
357 N. SHERIDAN STREET
SUITE 117
CORONA, CALIFORNIA 92880
TEL. (951) 279-1860
FAX (951) 279-4380

REGISTERED PROFESSIONAL ENGINEER DONALD W. BOYCE No. 28949 CIVIL STATE OF CALIFORNIA

Donald Boyce 8/16/2021
ENGINEER R.C.E. 28949 DATE

COUNTY FILE No. 970-B

COUNTY OF RIVERSIDE
TRANSPOTATION DEPARTMENT
RECMD COUNTY OVERSIGHT ENGINEER 8/11/21
APPROVES AS TO COMPLIANCE WITH APPLICABLE COUNTY STANDARDS AND PRACTICES.
REGISTRATION # 76450 DATE SIGNED

Don't Dig...Until You Call U.S.A. Toll Free
DIAL 811
for the location of buried utility lines.
Don't disrupt vital services.
TWO WORKING DAYS BEFORE YOU DIG

BENCH MARK
NAD83 Epoch 2011, CCS83, ZONE 6-
NAVD88(COH88)
RCFC B.M. Z 15502
SET MAG NAIL W/ RCFC WCD TAG FLUSH
E 6,226,565.52 N 2,177,350.50
ELEV: 1,401.46 SURVEY DATE: 02/2013

REF.	REVISIONS DESCRIPTION	APPR.	DATE

RIVERSIDE COUNTY FLOOD CONTROL AND WATER CONSERVATION DISTRICT

DESIGNED BY: K&A ENGINEERING
DRAWN BY: ADA
DATE DRAWN: JUNE 2021
PB NUMBER: 226078

RECOMMENDED FOR APPROVAL BY: DATE 7-27-2021
APPROVED BY: DATE 8/4/2021

LAKELAND VILLAGE MDP LINE H & H2

STORM DRAIN CONNECTOR PIPE PROFILES

PROJECT NO. 3-0-00020
DRAWING NO. 3-0207
SHEET NO. 31 OF 65

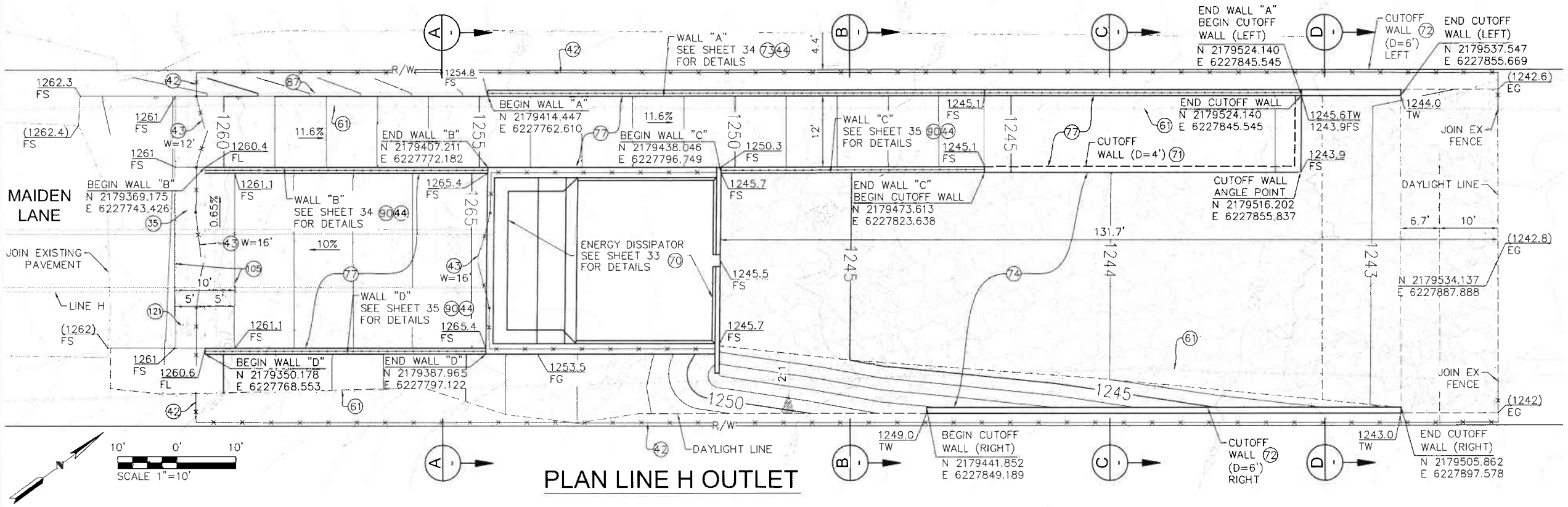

PLAN LINE H OUTLET

CONSTRUCTION NOTES

- (35) PROTECT IN PLACE
- (42) INSTALL 6' HIGH CHAIN LINK FENCE PER RCFC&WCD STD. M801
- (43) INSTALL DOUBLE DRIVE GATE PER RCFC&WCD STD. M801, W PER PLAN
- (44) INSTALL CABLE RAILING PER CALTRANS STD. B11-47
- (61) REMOVE & LEGALLY DISPOSE OF INTERFERING PORTIONS OF EXISTING FENCE
- (70) CONSTRUCT ENERGY DISSIPATOR – IMPACT BASIN WITH VERTICAL BAFFLE WALL PER SPPWC STD. PLAN 384-3 (W=28', STRENGTH DESIGN) DETAILS ON SHEET 33
- (71) CONSTRUCT 4' CUTOFF WALL WITH SLAB TIE-IN PER DETAIL ON SHEET 51
- (72) CONSTRUCT 6' CUTOFF WALL PER DETAIL ON SHEET 51
- (73) CONSTRUCT RETAINING WALL TYPE "6A" (CASE1) PER CALTRANS STD. B3-7A
- (74) PLACE 36" THICK CLASS V (1/4 TON) ROCK SLOPE PROTECTION OVER 6" FILTER MATERIAL OVER FILTER FABRIC PER DETAIL ON SHEET 51
- (77) CONSTRUCT 6" CONCRETE ACCESS ROAD WITH #4@12" O.C. EACH WAY 2" CLEAR ON TOP
- (87) CONSTRUCT TYPE "D" CURB PER RCTD STD. NO. 204
- (90) CONSTRUCT RETAINING WALL TYPE "1A" (CASE 1) PER CALTRANS STD. B3-3A
- (105) CONSTRUCT CONCRETE CROSS GUTTER PER RCTD STD. NO. 209
- (121) EXISTING SEWER MANHOLE – ADJUST TO GRADE

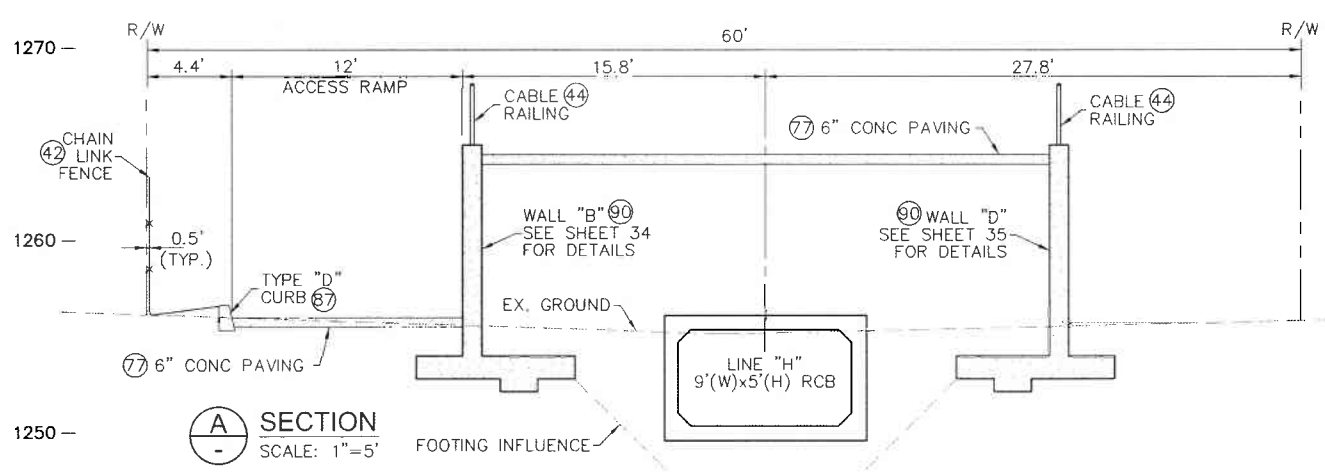

A SECTION
SCALE: 1"=5'

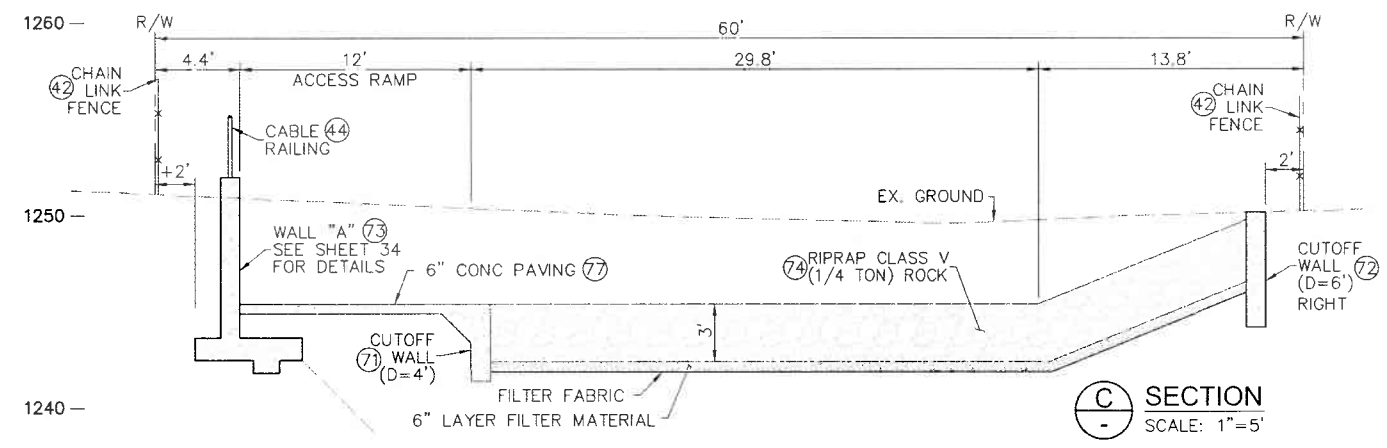

C SECTION
SCALE: 1"=5'

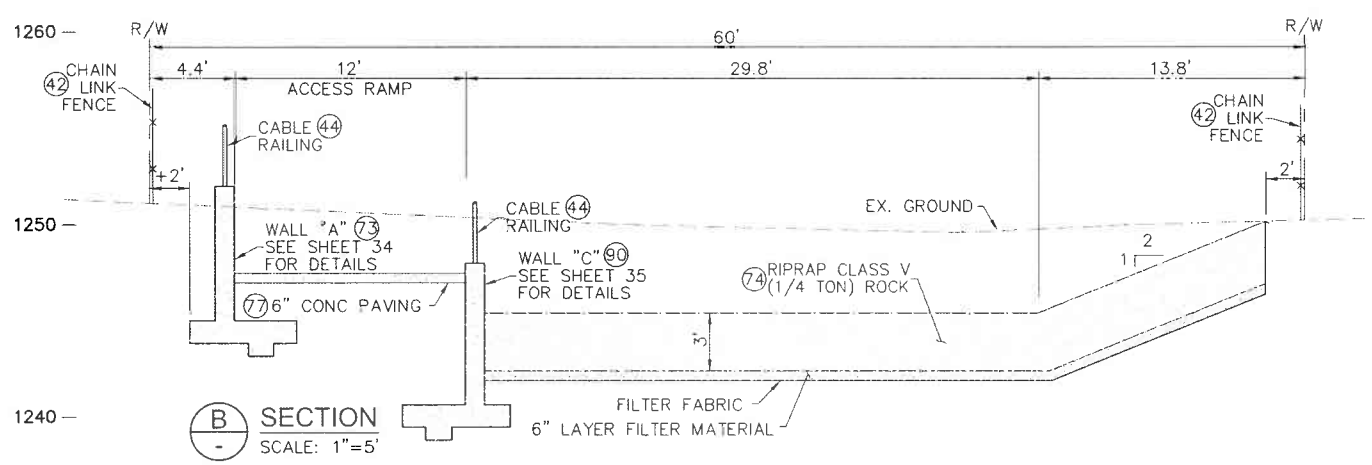

B SECTION
SCALE: 1"=5'

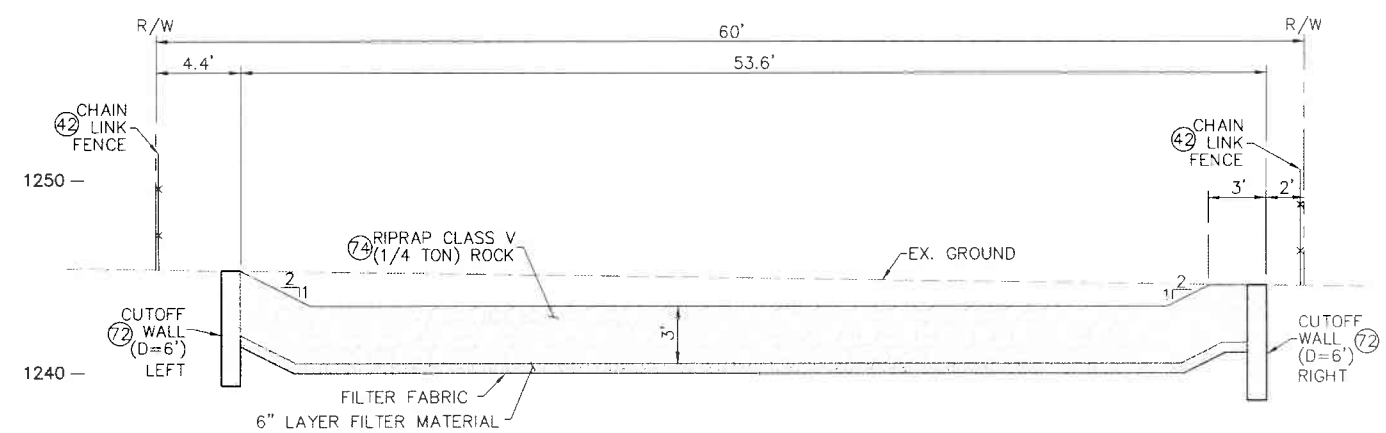

D SECTION
SCALE: 1"=5'

CONSTRUCTION DRAWING SET DATED 22 JUNE, 2021

K&A Engineering, Inc. — ENGINEERING / LAND PLANNING / SURVEYING
357 N. SHERIDAN STREET, SUITE 117, CORONA, CALIFORNIA 92880, TEL. (951) 279-1800, FAX (951) 279-4390
ENGINEER R.C.E. 28949 — DATE: 8/16/2021

COUNTY FILE No. 970-B
COUNTY OF RIVERSIDE TRANSPORTATION DEPARTMENT
RECMD COUNTY OVERSIGHT ENGINEER 8/11/21
APPROVES AS TO COMPLIANCE WITH APPLICABLE COUNTY STANDARDS AND PRACTICES.
REGISTRATION # 76450 DATE SIGNED

Don't Dig...Until You Call U.S.A. Toll Free DIAL 811 for the location of buried utility lines. Don't disrupt vital services.
TWO WORKING DAYS BEFORE YOU DIG

BENCH MARK
NAD83 Epoch 2011, CCS83, ZONE 6-NAVD88(COH88)
RCFC B.M. Z 15502
SET MAG NAIL W/ RCFC WCD TAG FLUSH
E 6,226,565.52 N 2,177,350.50
ELEV.: 1,401.46 SURVEY DATE: 02/2013

REF	DESCRIPTION	APPR	DATE
	REVISIONS		

RIVERSIDE COUNTY FLOOD CONTROL AND WATER CONSERVATION DISTRICT
DESIGNED BY: K&A ENGINEERING
DRAWN BY: ADA
DATE DRAWN: JUNE 2021
PB NUMBER: 226078
RECOMMENDED FOR APPROVAL BY: DATE 7-27-2021
APPROVED BY: DATE 8/4/2021

LAKELAND VILLAGE MDP
STORM DRAIN
LINE H OUTLET
OUTLET GRADING AND SECTIONS

PROJECT NO. 3-0-00020
DRAWING NO. 3-0207
SHEET NO. 32 OF 65

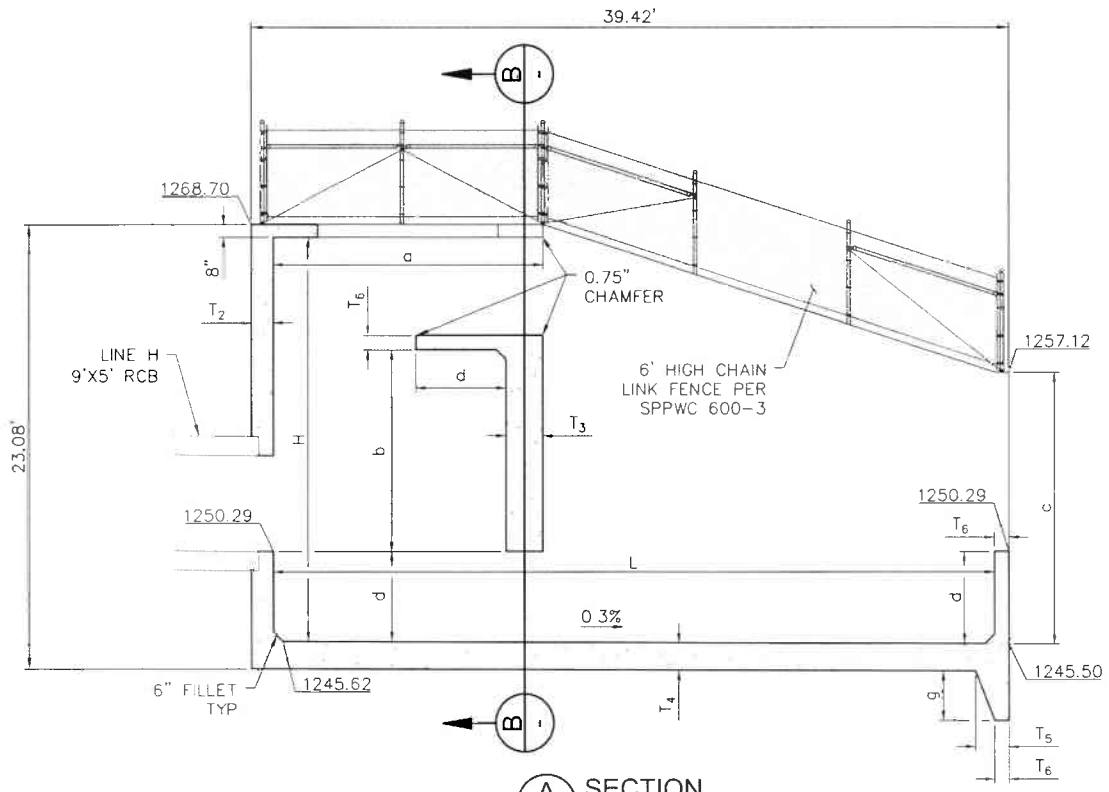

A SECTION
SCALE: 1" = 5'

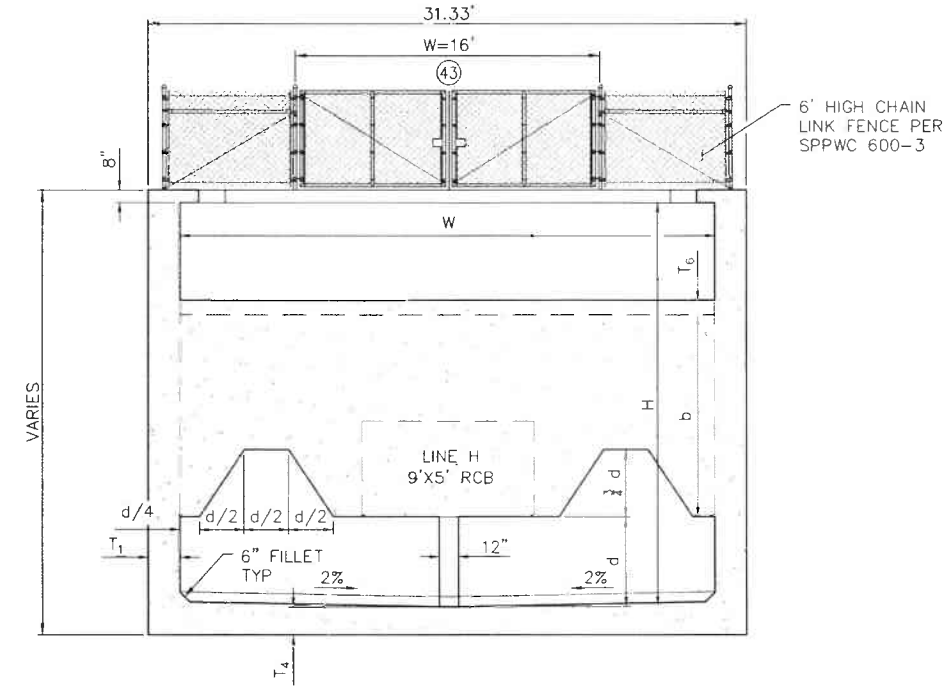

B SECTION
SCALE: 1" = 5'

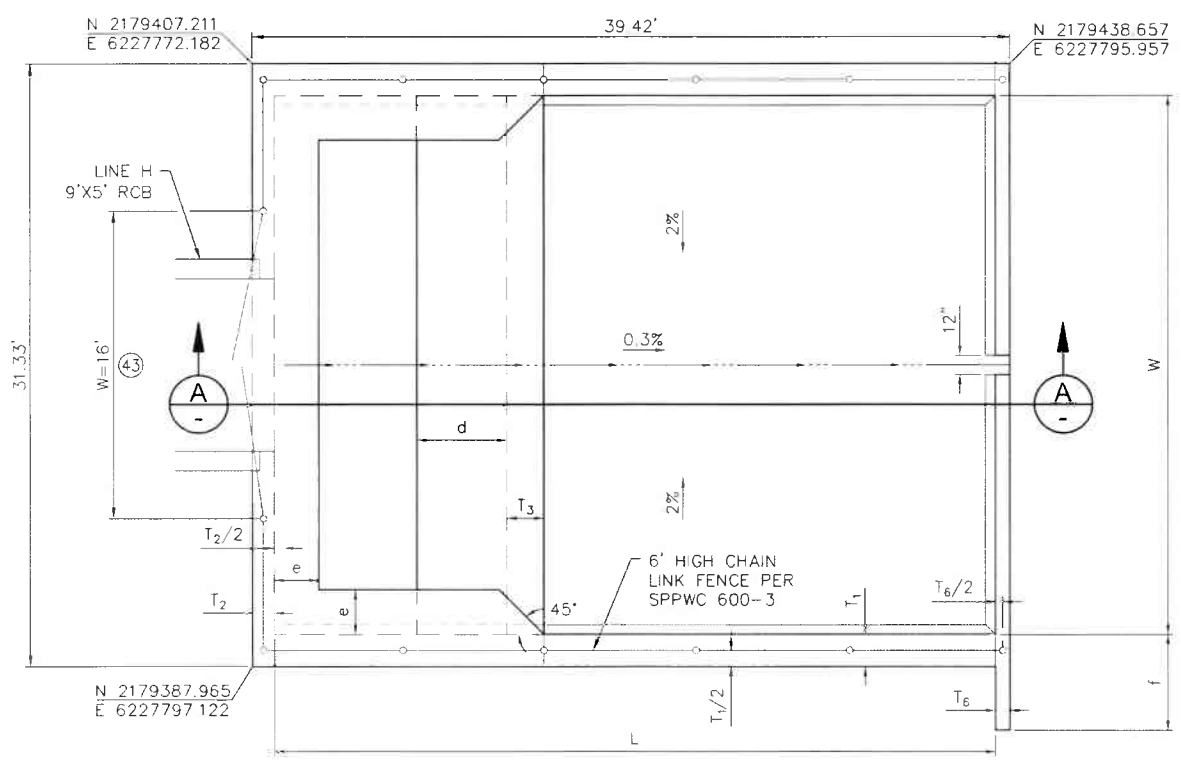

5' 0' 5'
SCALE 1"=5'

70 ENERGY DISSIPATOR DETAIL
SCALE: 1" = 5'

CONSTRUCTION NOTES

43 INSTALL DOUBLE DRIVE GATE PER RCFC&WCD STD. M801, W PER PLAN

70 CONSTRUCT ENERGY DISSIPATOR – IMPACT BASIN WITH VERTICAL BAFFLE WALL PER SPPWC STD. PLAN 384-3 (W=28') & DETAILS HEREON

70 ENERGY DISSIPATOR

SPPWC STANDARD PLAN 384-3
(STRENGTH DESIGN)

W = 28'	T_1 = 20"
H = 21'	T_2 = 14"
L = 37'-6"	T_3 = 23"
a = 14'-6"	T_4 = 17"
b = 10'-6"	T_5 = 21"
c = 14'	T_6 = 9"
d = 4'-8"	
e = 2'-4"	
f = 5'	
g = 4' (CUTOFF WALL)	

CONSTRUCTION DRAWING SET DATED 22 JUNE, 2021

K&A ENGINEERING LAND PLANNING SURVEYING
Engineering, Inc.
357 N. SHERIDAN STREET
SUITE 117
CORONA, CALIFORNIA 92880
TEL (951) 279-1800
FAX (951) 279-4381

REGISTERED PROFESSIONAL ENGINEER DONALD W. BERGH No. 28949 CIVIL STATE OF CALIFORNIA

Donald Bergh 8/16/2021
ENGINEER R.C.E. 28949 DATE

COUNTY FILE No. 970-B

COUNTY OF RIVERSIDE
TRANSPORTATION DEPARTMENT
RECMD COUNTY OVERSIGHT ENGINEER 8/11/21
APPROVED AS TO COMPLIANCE WITH APPLICABLE COUNTY STANDARDS AND PRACTICES
REGISTRATION # 70450 DATE SIGNED

Don't Dig...Until You Call U.S.A. Toll Free
DIAL 811
for the location of buried utility lines.
Don't disrupt vital services.
TWO WORKING DAYS BEFORE YOU DIG

BENCH MARK
NAD83 Epoch 2011, CCS83, ZONE 6-NAVD88(GOH88)
RCFC BM: Z 15502
SET MAG NAIL W/ RCFC WCD TAG FLUSH
E 6,226,565.52 N 2,177,350.50
ELEV: 1,401.46 SURVEY DATE: 02/2013

REF	DESCRIPTION	APPR	DATE
	REVISIONS		

RIVERSIDE COUNTY FLOOD CONTROL AND WATER CONSERVATION DISTRICT
DESIGNED BY: K&A ENGINEERING
DRAWN BY: AQA
DATE DRAWN: JUNE 2021
P8 NUMBER: 226078
RECOMMENDED FOR APPROVAL BY: DATE 7-27-2021
APPROVED BY: DATE 8/4/2021

LAKELAND VILLAGE MDP
STORM DRAIN
LINE H OUTLET STRUCTURE
ENERGY DISSIPATOR

PROJECT NO 3-0-00020
DRAWING NO 3-0207
SHEET NO. 33 OF 65

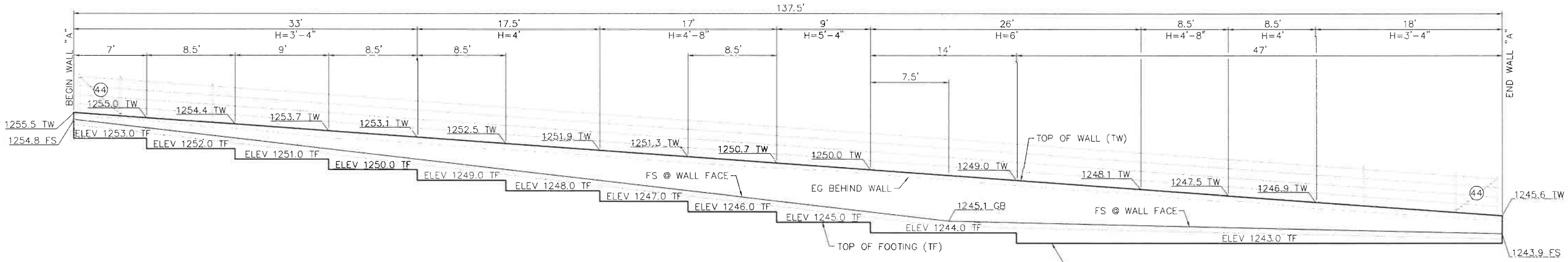

WALL "A" ELEVATION

SCALE: 1" = 5'

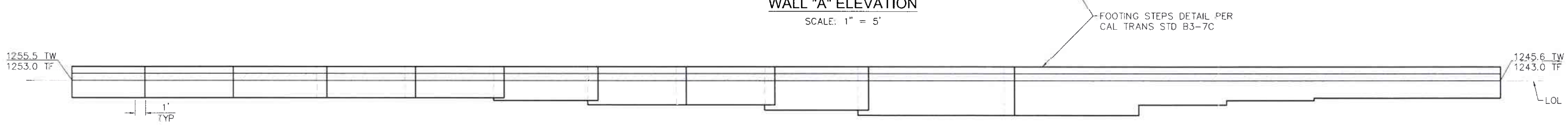

WALL "A" FOOTING PLAN

SCALE: 1" = 5'

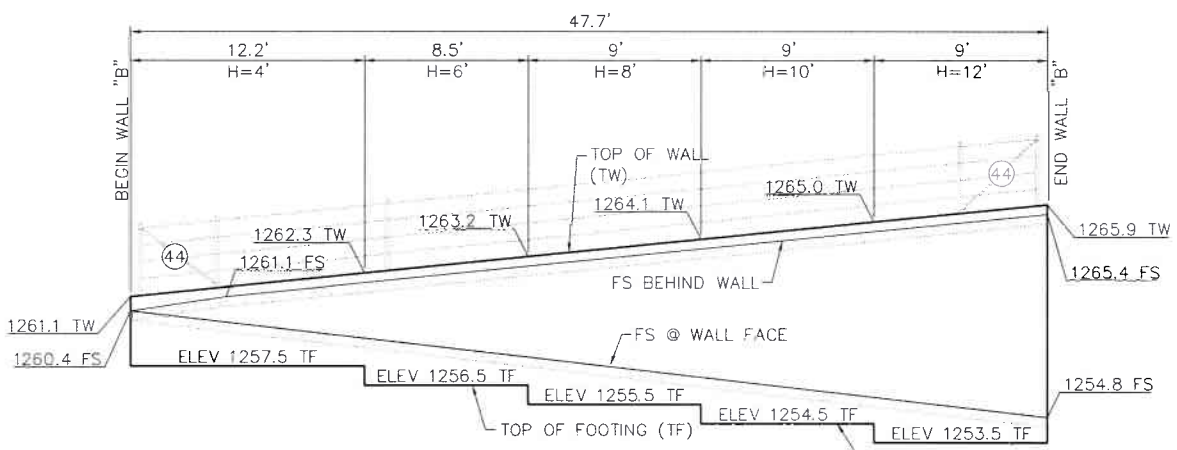

WALL "B" ELEVATION

SCALE: 1" = 5'

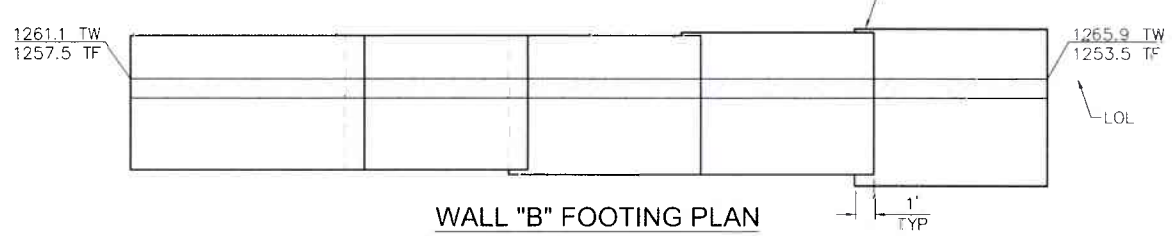

WALL "B" FOOTING PLAN

SCALE: 1" = 5'

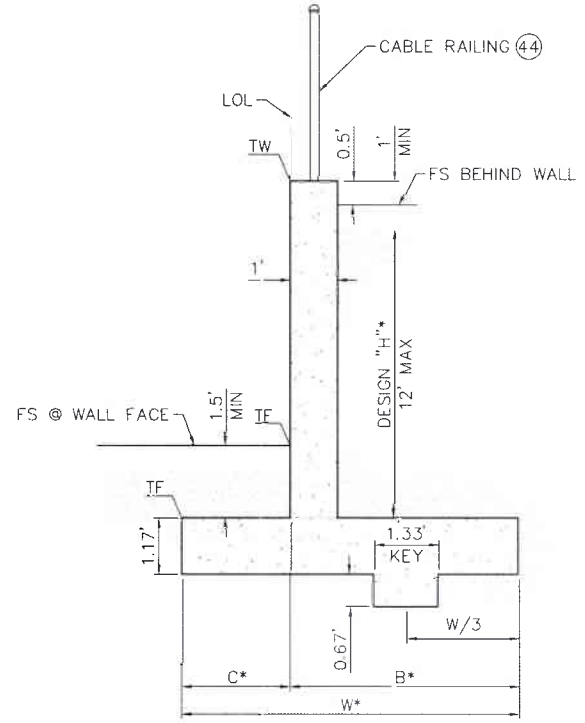

90 WALL "B" TYPICAL SECTION

CALTRANS STD. PLAN B3-3A
RETAINING WALL TYPE 1A (CASE 1)
SCALE: 1" = 2'

WALL NOTES:

H SHOWN IS DESIGN "H" FOR USE IN DETERMINING DIMENSIONS AND REINFORCEMENT STEEL PER REFERENCED CALTRANS STD.

* W, C, B & STEEL REINFORCEMENT PER DESIGN "H" IN CHART ON CALTRANS STD B3-3A OR B3-7A.

RETAINING WALL CONSTRUCTION NOTES

44 INSTALL CABLE RAILING PER CALTRANS STD. B11-47

73 CONSTRUCT RETAINING WALL TYPE "6A" (CASE1) PER CALTRANS STD. B3-7A

90 CONSTRUCT RETAINING WALL TYPE "1A" (CASE 1) PER CALTRANS STD. B3-3A

GENERAL NOTES:

1. CONSTRUCT WALL EXPANSION JOINTS (WITH WATERSTOPS), WEAKENED PLANES, WEEP HOLES AND PERVIOUS BACKFILL IN ACCORDANCE WITH CALTRANS STANDARD PLAN B0-3.
2. AT BEGIN AND END WALL, PROVIDE 1" EXPANSION JOINT FILLER MATERIAL BETWEEN WALL AND ANY ADJOINING PORTION OF AN ADJACENT STRUCTURE.

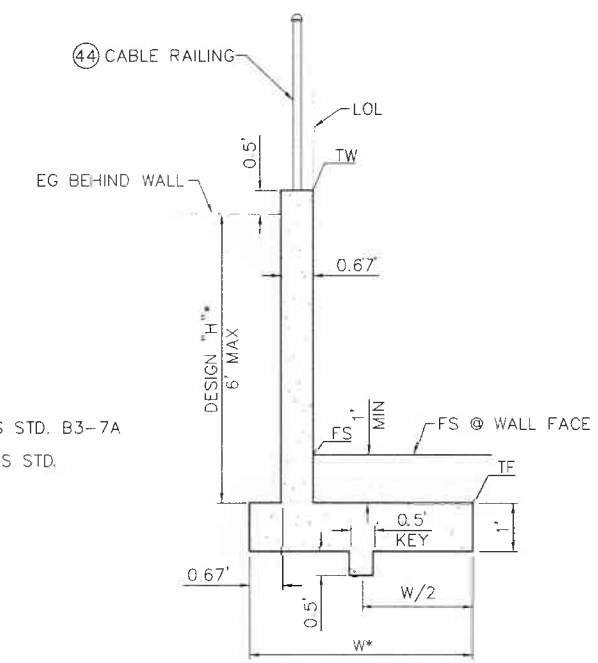

73 WALL "A" TYPICAL SECTION

CALTRANS STD. PLAN B3-7A
RETAINING WALL TYPE 6A (CASE 1)
REINFORCED CONCRETE STEM
SCALE: 1" = 2'

CONSTRUCTION DRAWING SET DATED 22 JUNE, 2021

K&A Engineering, Inc.
ENGINEERING LAND PLANNING SURVEYING
357 N. SHERIDAN STREET SUITE 117
CORONA, CALIFORNIA 92880
TEL (951) 279-1800
FAX (951) 279-4380

REGISTERED PROFESSIONAL ENGINEER DONALD W. BERST No. 28949 CIVIL STATE OF CALIFORNIA

Donald Berst 8/16/2021
ENGINEER R.C.E. 28949 DATE

COUNTY FILE No. 970-B
COUNTY OF RIVERSIDE
TRANSPORTATION DEPARTMENT
RECMD COUNTY OVERSIGHT ENGINEER 8/11/21
APPROVES AS TO COMPLIANCE WITH APPLICABLE COUNTY STANDARDS AND PRACTICES
REGISTRATION # 76450 DATE SIGNED

Don't Dig...Until You Call U.S.A. Toll Free DIAL 811 for the location of buried utility lines. Don't disrupt vital services.
BURIED CABLE
TWO WORKING DAYS BEFORE YOU DIG

BENCH MARK
NAD83 Epoch 2011, CCS83, ZONE 6-NAVD88(CC488)
RCFC B.M. Z 13502
SET MAG NAIL W/ RCFC WCD TAG FLUSH
E 6,226,565.52 N 2,177,350.50
ELEV: 1,401.46 SURVEY DATE: 02/2013

REF	REVISIONS	APPR	DATE

RIVERSIDE COUNTY FLOOD CONTROL AND WATER CONSERVATION DISTRICT

DESIGNED BY: K&A ENGINEERING
DRAWN BY: ADA
DATE DRAWN: JUNE 2021
P.B. NUMBER: 226078

RECOMMENDED FOR APPROVAL BY: DATE 7-27-2021
APPROVED BY: DATE 8/4/2021

LAKELAND VILLAGE MDP

STORM DRAIN
LINE H OUTLET STRUCTURE
WALL PROFILES

PROJECT NO. 3-0-00020
DRAWING NO. 3-0207
SHEET NO. 34 OF 65

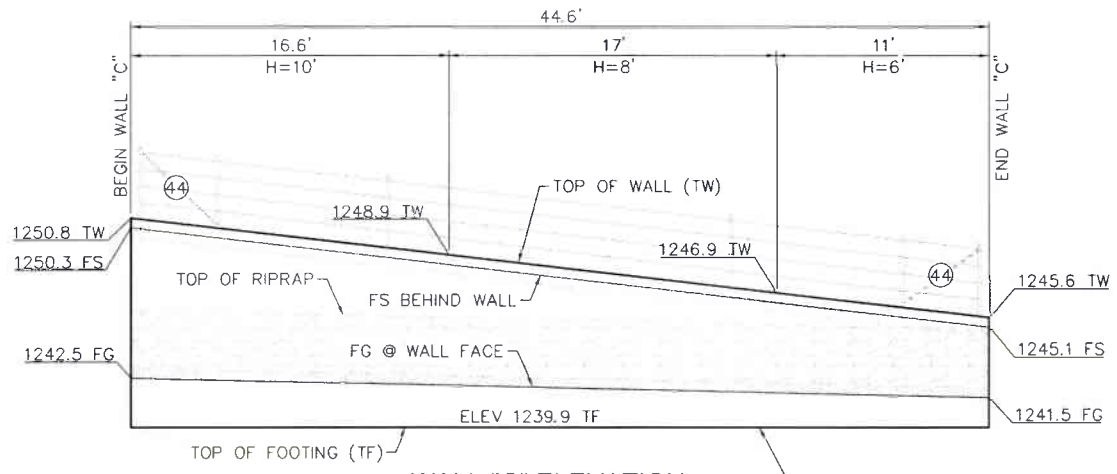

WALL "C" ELEVATION

SCALE: 1" = 5'

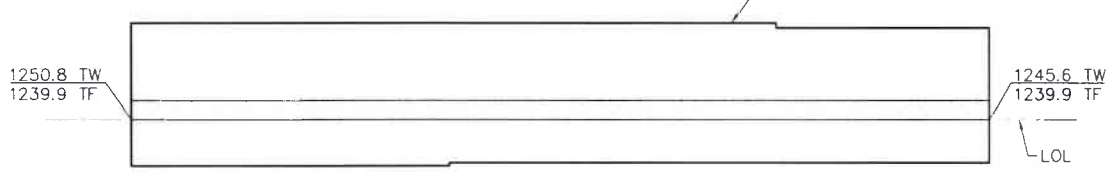

WALL "C" FOOTING PLAN

SCALE: 1" = 5'

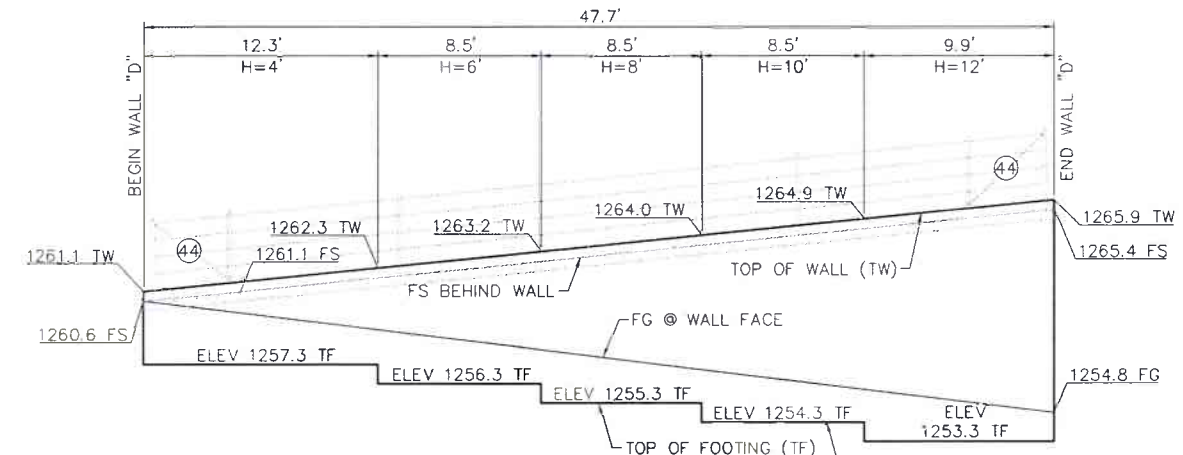

WALL "D" ELEVATION

SCALE: 1" = 5'

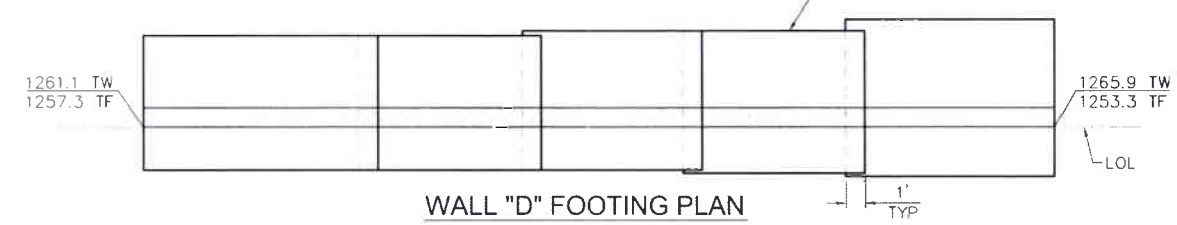

WALL "D" FOOTING PLAN

SCALE: 1" = 5'

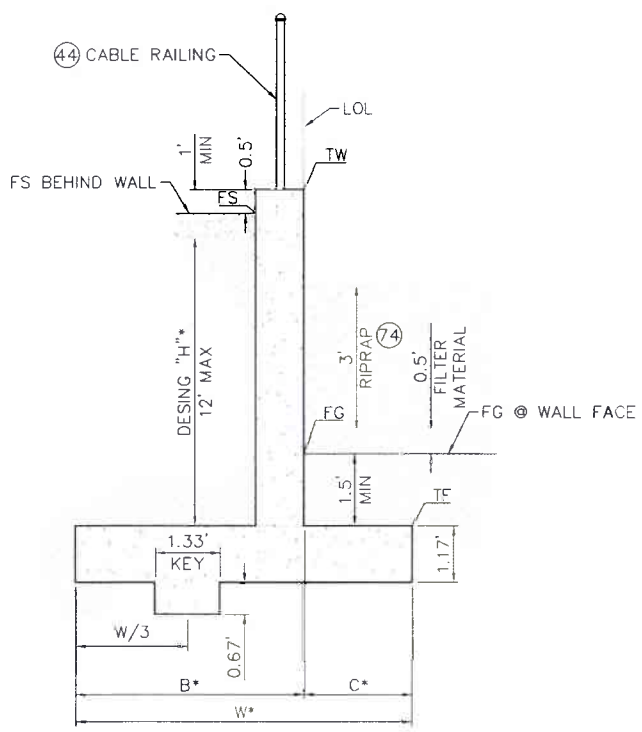

90 WALL "C" TYPICAL SECTION

CALTRANS STD. PLAN B3-3A
RETAINING WALL TYPE 1A (CASE 1)
REINFORCED CONCRETE STEM
SCALE: 1" = 2'

WALL NOTES:

H SHOWN IS DESIGN "H" FOR USE IN DETERMINING DIMENSIONS AND REINFORCEMENT STEEL PER REFERENCED CALTRANS STD.

* W, C, B & STEEL REINFORCEMENT PER DESIGN "H" IN CHART ON CALTRANS STD B3-3A.

RETAINING WALL CONSTRUCTION NOTES

44 INSTALL CABLE RAILING PER CALTRANS STD. B11-47

74 PLACE 36" THICK CLASS V (1/4 TON) ROCK SLOPE PROTECTION OVER 6" FILTER MATERIAL OVER FILTER FABRIC PER DETAIL ON SHEET 51

90 CONSTRUCT RETAINING WALL TYPE "1A" (CASE 1) PER CALTRANS STD. B3-3A

GENERAL NOTES:

1. CONSTRUCT WALL EXPANSION JOINTS (WITH WATERSTOPS), WEAKENED PLANES, WEEP HOLES AND PERVIOUS BACKFILL IN ACCORDANCE WITH CALTRANS STANDARD PLAN B0-3.
2. AT BEGIN AND END WALL, PROVIDE 1" EXPANSION JOINT FILLER MATERIAL BETWEEN WALL AND ANY ADJOINING PORTION OF AN ADJACENT STRUCTURE.

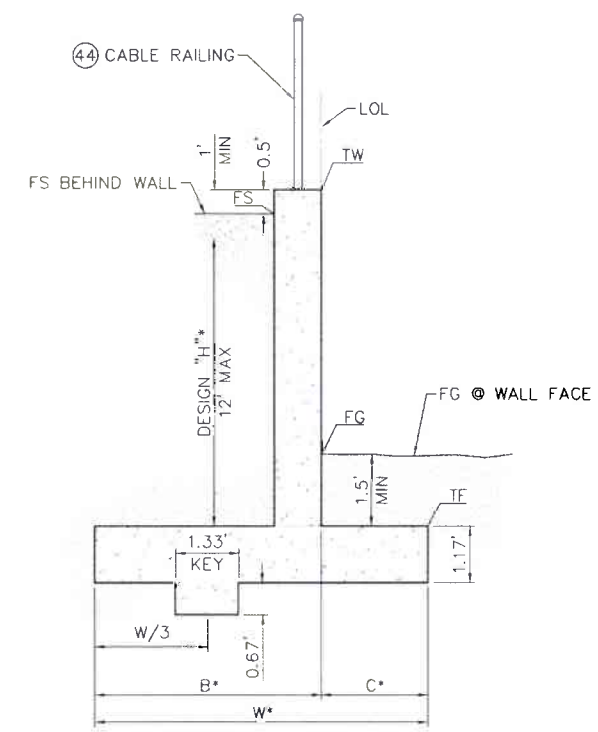

90 WALL "D" TYPICAL SECTION

CALTRANS STD. PLAN B3-3A
RETAINING WALL TYPE 1A (CASE 1)
REINFORCED CONCRETE STEM
SCALE: 1" = 2'

CONSTRUCTION DRAWING SET DATED 22 JUNE, 2021

K&A Engineering, Inc.
ENGINEERING / LAND PLANNING / SURVEYING
357 N. SHERIDAN STREET
SUITE 117
CORONA, CALIFORNIA 92880
TEL. (951) 279-1800
FAX (951) 279-4380

REGISTERED PROFESSIONAL ENGINEER DONALD W. BERGH No. 28949 CIVIL STATE OF CALIFORNIA

Donald Bergh 8/16/2021
ENGINEER R.C.E. 28949 DATE

COUNTY FILE No. 970-B
COUNTY OF RIVERSIDE
TRANSPORTATION DEPARTMENT
RECMD COUNTY OVERSIGHT ENGINEER 8/11/21
APPROVES AS TO COMPLIANCE WITH APPLICABLE COUNTY STANDARDS AND PRACTICES
REGISTRATION # 76450 DATE SIGNED

Don't Dig...Until You Call U.S.A. Toll Free
DIAL 811
for the location of buried utility lines.
Don't disrupt vital services.
TWO WORKING DAYS BEFORE YOU DIG

BENCH MARK
NAD83 Epoch 2011, CCS83, ZONE 6-
NAVD88(COHB8)
RCFC B.M. Z 15502
SET MAG NAIL W/ RCFC WCD TAG FLUSH
E 6,226,565.52 N 2,177,350.50
ELEV: 1,401.46 SURVEY DATE: 02/2013

REF.	REVISIONS	APPR	DATE

RIVERSIDE COUNTY FLOOD CONTROL AND WATER CONSERVATION DISTRICT

DESIGNED BY: K&A ENGINEERING
DRAWN BY: ADA
DATE DRAWN: JUNE 2021
PB NUMBER: 226078

RECOMMENDED FOR APPROVAL BY: DATE 7-27-2021
APPROVED BY: DATE 8/4/2021

LAKELAND VILLAGE MDP

STORM DRAIN
LINE H OUTLET STRUCTURE
WALL PROFILES

PROJECT NO. 3-0-00020
DRAWING NO. 3-0207
SHEET NO. 35 OF 65

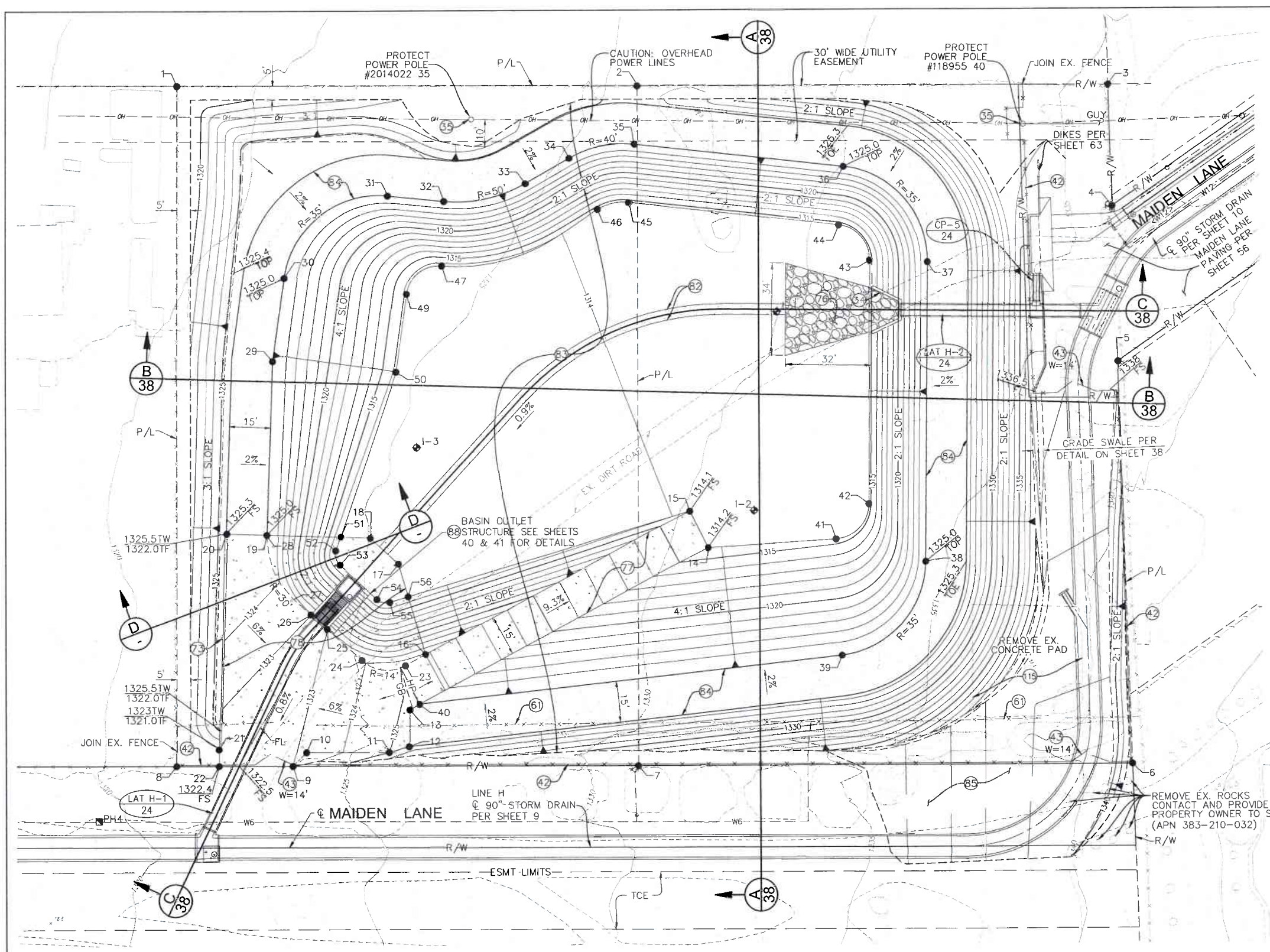

INLET AND OULET STRUCTURES CONSTRUCTION NOTES

(34) CONSTRUCT CONCRETE HEADWALL & WINGWALL TYPE "A" PER CALTRANS STD. D90, L=11.3', ANGLE=25.6°

(35) PROTECT IN PLACE

(42) INSTALL 6' HIGH CHAIN LINK FENCE PER RCFC&WCD STD. M801

(43) INSTALL DOUBLE DRIVE GATE PER RCFC&WCD STD. M801, W PER PLAN

(61) REMOVE & LEGALLY DISPOSE OF INTERFERING PORTIONS OF EXISTING FENCE

(73) CONSTRUCT RETAINING WALL TYPE "6A" (CASE1) PER CALTRANS STD. B3-7A

(76) PLACE 48" THICK CLASS VII (1/2 TON) ROCK SLOPE PROTECTION OVER 6" FILTER MATERIAL OVER FILTER FABRIC PER DETAIL ON SHEET 51

(77) CONSTRUCT 6" CONCRETE ACCESS ROAD WITH #4@12" O.C. EACH WAY 2" CLEAR ON TOP

(78) CONSTRUCT 6" CONCRETE SLOPE PAVING WITH #4@12" O.C. EACH WAY 2" CLEAR ON TOP PER DETAIL HEREON

(82) CONSTRUCT LOW FLOW GRAVEL TRENCH 4'WIDE x 2'DEEP PER DETAIL ON SHEET 38

(83) GRADE SEDIMENT BASIN; GRADE AREA AS SHOWN WITHIN GRADING LIMITS OR AS DIRECTED BY THE ENGINEER

(84) GRADE MAINTENANCE ROAD; WITHIN LIMITS AND TO GRADE AS SHOWN OR AS DIRECTED BY THE ENGINEER, PAVE WITH 3" CRUSHED ROCK OVER COMPACTED NATIVE

(85) GRADE MAIDEN LANE AS SHOWN WITHIN LIMITS OR AS DIRECTED BY ENGINEER

(88) CONSTRUCT BASIN OUTLET STRUCTURE PER DETAILS ON SHEETS 40 & 41

(115) REMOVE & LEGALLY DISPOSE OF EXISTING CONCRETE CURB, GUTTER, SIDEWALK, DRIVEWAY & MISC. CONCRETE, AS REQUIRED FOR CONSTRUCTION

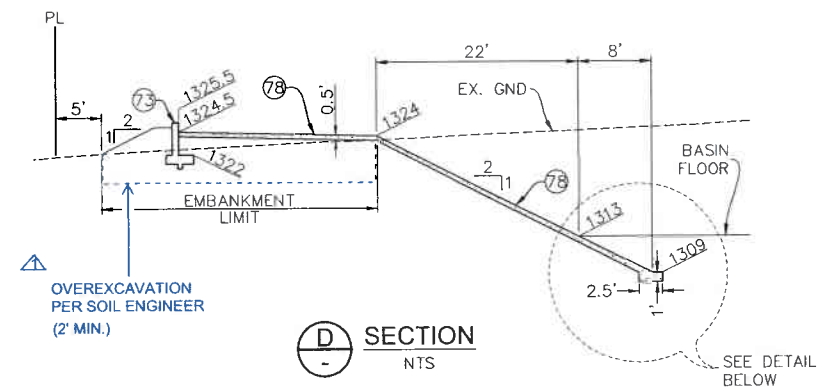

(D) SECTION
NTS

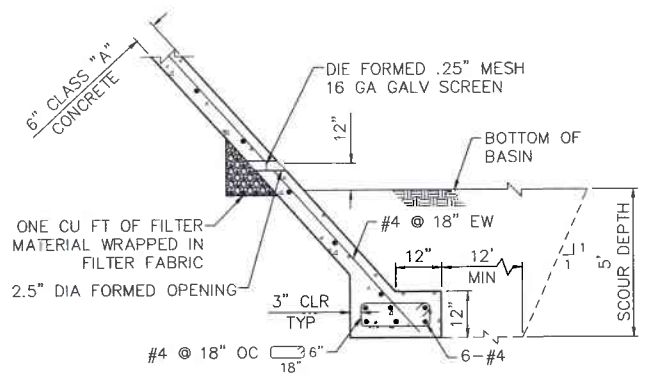

(78) SLOPE PAVING CUTOFF WALL DETAIL
NTS

CONSTRUCTION DRAWING SET DATED 22 JUNE, 2021

LEGEND

- B-X = SOIL BORING LOCATION
- PHX = POTHOLE LOCATION MARCH 2018
- PHX = MARKED FOR POTHOLE, NOTHING FOUND
- PHX = POTHOLE LOCATION JULY 2018
- PHX = MARKED FOR POTHOLE, NOTHING FOUND
- 57 = SURVEY CONTROL POINT
- CP-6 / 27 = CONNECTOR PIPE NUMBER / REFERENCE SHEET NUMBER

SCALE 1"=20'

COUNTY FILE No. 970-B

K&A ENGINEERING LAND PLANNING SURVEYING
Engineering, Inc.
357 N. SHERIDAN STREET
SUITE 117
CORONA, CALIFORNIA 92880
TEL. (951) 279-1800
FAX (951) 279-4380

REGISTERED PROFESSIONAL ENGINEER DONALD W. BIRCH No. 28949 CIVIL STATE OF CALIFORNIA

Donald Birch 8/16/2021
ENGINEER R.C.E. 28949 DATE:

COUNTY OF RIVERSIDE TRANSPOTATION DEPARTMENT
RECMD. COUNTY OVERSIGHT ENGINEER 8/11/21
APPROVES AS TO COMPLIANCE WITH APPLICABLE COUNTY STANDARDS AND PRACTICES.
REGISTRATION # 76450 DATE SIGNED

Don't Dig...Until You Call U.S.A. Toll Free DIAL 811 for the location of buried utility lines. Don't disrupt vital services.
TWO WORKING DAYS BEFORE YOU DIG

BENCH MARK
NAD83 Epoch 2011, CCS83, ZONE 6-NAVD88(COH88)
RCFC B.M. Z 15502
SET MAG NAIL W/ RCFC WCD TAG FLUSH
E 6,226,565.52 N 2,177,350.50
ELEV: 1,401.46 SURVEY DATE: 02/2013

REF.	REVISIONS	APPR.	DATE
1	OVEREXCAVATION LIMIT AND MIN. DEPTH ADDED TO SECTION D-D	E.A.	10/13/21

RIVERSIDE COUNTY FLOOD CONTROL AND WATER CONSERVATION DISTRICT
DESIGNED BY: K&A ENGINEERING
DRAWN BY: ADA
DATE DRAWN: JUNE 2021
PW NUMBER: 226078
RECOMMENDED FOR APPROVAL BY: Amadh Gangwani DATE 7-27-2021
APPROVED BY: Chad Parks DATE: 8/4/2021

LAKELAND VILLAGE MDP
LINE H
STORM DRAIN
LINE H SEDIMENT BASIN
BASIN GRADING

PROJECT NO. 3-0-00020
DRAWING NO. 0-0000
SHEET NO. 36 OF 65

Drawing: R:\234638\Final\Storm Drain\638 - PLN - SD - LAKELAND - 036.dwg Layout: 36 GRADING Saved: 1/20/2021 12:37 PM Plotted: 8/16/2021 12:28 PM By: Patrick Brown

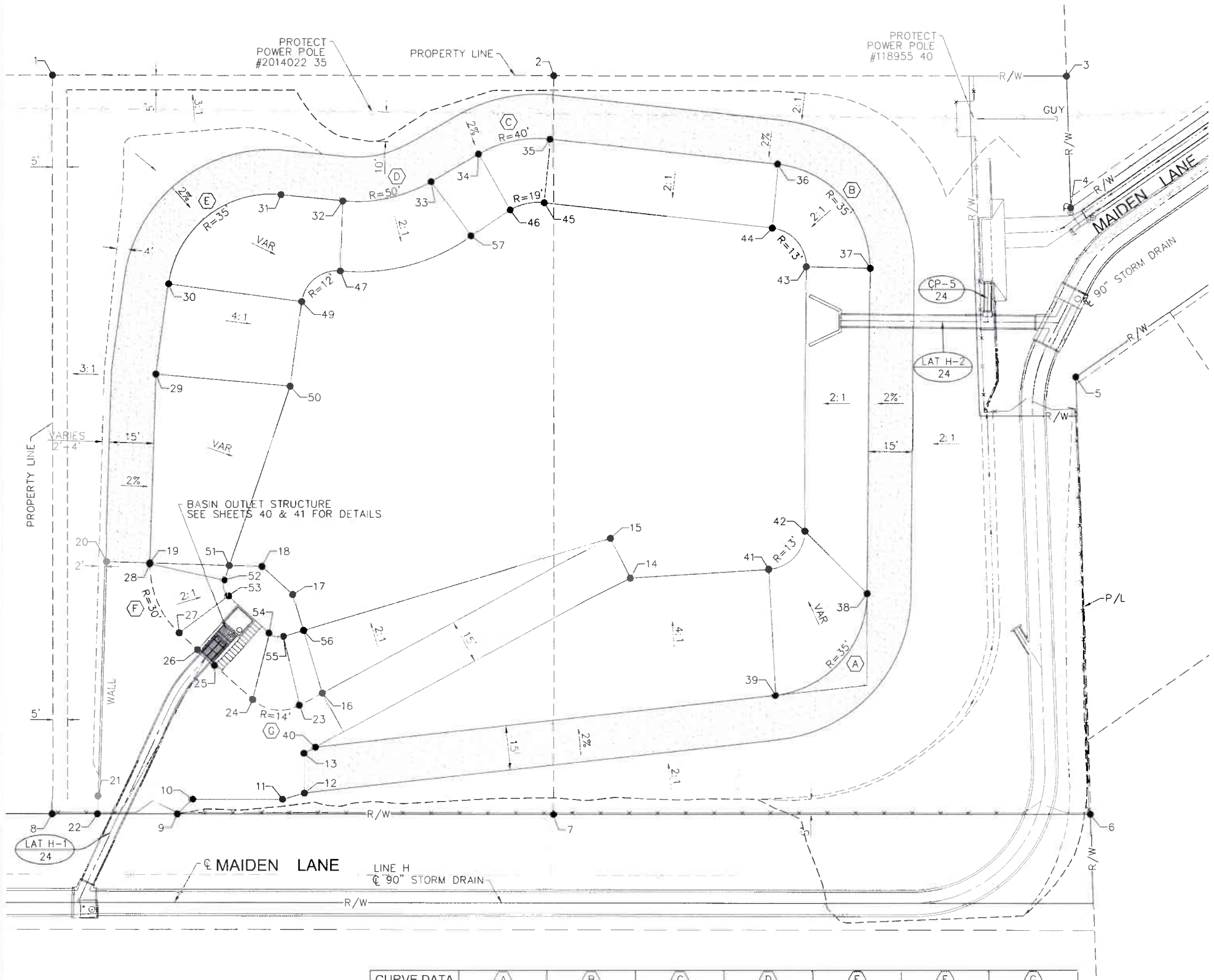

PROJECT LIMITS		
PT.	NORTHING	EASTING
1	2178248.69	6227266.09
2	2178113.21	6227163.34
3	2177974.52	6227058.15
4	2178000.29	6227021.70
5	2178033.34	6226974.95
6	2178118.72	6226854.20
7	2178264.11	6226964.12
8	2178399.52	6227066.81

BASIN SURVEY CONTROL				
PT.	NORTHING	EASTING	EL.	DESCRIPTION
9	2178365.73	6227041.19	1323.0	EDGE PCC PAVEMENT
10	2178358.72	6227042.15	1323.2	EDGE PCC PAVEMENT
11	2178334.33	6227023.65	1325.0	EDGE PCC PAVEMENT
12	2178327.19	6227020.85	1325.3	EDGE PCC PAVEMENT
13	2178319.05	6227031.57	1325.0	PCC MAINTENANCE ROAD
14	2178195.17	6227012.23	1314.2	PCC MAINTENANCE ROAD
15	2178192.48	6227026.98	1314.1	PCC MAINTENANCE ROAD
16	2178301.97	6227044.14	1324.1	PCC MAINTENANCE ROAD
17	2178289.79	6227076.77	1313.1	EDGE PCC PAVEMENT
18	2178292.37	6227090.57	1313.1	EDGE PCC PAVEMENT
19	2178321.98	6227114.49	1325.0	EDGE PCC PAVEMENT
20	2178333.43	6227123.75	1325.0	EDGE PCC PAVEMENT
21	2178383.56	6227062.36	1322.8	EDGE PCC PAVEMENT
22	2178387.24	6227057.50	1322.4	EDGE PCC PAVEMENT
23	2178310.54	6227045.44	1324.8	EDGE PCC PAVEMENT
24	2178322.19	6227056.70	1323.9	EDGE PCC PAVEMENT
25	2178325.36	6227073.62	1323.0	EDGE PCC PAVEMENT
26	2178326.84	6227081.48	1323.0	EDGE PCC PAVEMENT
27	2178328.39	6227089.78	1323.5	EDGE PCC PAVEMENT
28	2178322.20	6227114.21	1325.0	EDGE PCC PAVEMENT
29	2178281.70	6227164.13	1325.0	EDGE MAINTENANCE ROAD
30	2178259.88	6227186.01	1325.0	EDGE MAINTENANCE ROAD
31	2178211.30	6227186.97	1325.0	EDGE MAINTENANCE ROAD
32	2178195.89	6227172.69	1325.0	EDGE MAINTENANCE ROAD
33	2178168.06	6227159.74	1325.0	EDGE MAINTENANCE ROAD
34	2178149.62	6227157.45	1325.0	EDGE MAINTENANCE ROAD
35	2178127.06	6227146.81	1325.0	EDGE MAINTENANCE ROAD
36	2178070.63	6227093.42	1325.0	EDGE MAINTENANCE ROAD
37	2178066.97	6227046.61	1325.0	EDGE MAINTENANCE ROAD
38	2178134.24	6226959.44	1325.0	EDGE MAINTENANCE ROAD
39	2178179.83	6226950.74	1325.0	EDGE MAINTENANCE ROAD
40	2178314.76	6227030.92	1325.0	EDGE MAINTENANCE ROAD
41	2178155.95	6226986.20	1314.5	TOE
42	2178138.38	6226989.06	1314.6	TOE
43	2178083.82	6227060.11	1314.5	TOE
44	2178085.19	6227077.47	1314.5	TOE
45	2178141.77	6227130.98	1314.5	TOE
46	2178152.48	6227136.04	1314.5	TOE
47	2178210.81	6227154.32	1313.5	TOE
49	2178227.44	6227153.97	1313.5	TOE
50	2178247.87	6227133.48	1313.5	TOE
51	2178301.07	6227097.60	1313.1	EDGE PCC PAVEMENT
52	2178305.34	6227094.72	1313.1	EDGE PCC PAVEMENT
53	2178307.46	6227089.65	1313.1	EDGE PCC PAVEMENT
54	2178304.00	6227071.20	1313.1	EDGE PCC PAVEMENT
55	2178300.84	6227067.44	1313.1	EDGE PCC PAVEMENT
56	2178294.20	6227064.96	1313.1	EDGE PCC PAVEMENT
57	2178168.29	6227136.99	1314.0	TOE

CURVE DATA		Ⓐ	Ⓑ	Ⓒ	Ⓓ	Ⓔ	Ⓕ	Ⓖ
R		35'	35'	40'	50'	35'	30'	14'
Δ		83°03'42"	84°14'49"	36°19'55"	35°45'09"	87°55'18"	49°41'03"	70°43'02"
L		50.74'	51.46'	25.36'	31.20'	53.71'	26.01'	17.28'
T		31'	31.65'	13.13'	16.13'	33.75'	13.89'	9.93'
BC PT.		39	37	35	33	31	28	24
EC PT.		38	36	34	32	30	27	23
P.I.	NORTHING	2178153.178	2178047.634	2178136.599	2178184.063	2178236.053	2178330.956	2178320.357
	EASTING	6226934.901	6227071.670	6227155.830	6227161.724	6227209.919	6227103.429	6227046.937

N

20' 0' 20'

SCALE 1"=20'

K&A Engineering, Inc.
ENGINEERING LAND PLANNING SURVEYING
357 N. SHERIDAN STREET
SUITE 117
CORONA, CALIFORNIA 92880
TEL (951) 279-1800
FAX (951) 279-4380

REGISTERED PROFESSIONAL ENGINEER DONALD W. BERST No. 28949 CIVIL STATE OF CALIFORNIA

Donald Berst 8/16/2021

ENGINEER R.C.E. 28949 DATE

COUNTY FILE No. 970-B

COUNTY OF RIVERSIDE
TRANSPOTATION DEPARTMENT

RECMD COUNTY OVERSIGHT ENGINEER 8/11/21

APPROVES AS TO COMPLIANCE WITH APPLICABLE COUNTY STANDARDS AND PRACTICES

REGISTRATION # 76450 DATE SIGNED

Don't Dig...Until You Call U.S.A. Toll Free
DIAL 811
for the location of buried utility lines.
Don't disrupt vital services.
TWO WORKING DAYS BEFORE YOU DIG

BENCH MARK
NAD83 Epoch 2011, CCS83, ZONE 6-
NAVD88(CDH88)

RCFC B.M. Z 15502
SET MAG NAIL W/ RCFC WCD TAG FLUSH

E 6,226,565.52 N 2,177,350.50

ELEV.: 1,401.46 SURVEY DATE: 02/2013

REF	DESCRIPTION	APPR	DATE
	REVISIONS		

RIVERSIDE COUNTY FLOOD CONTROL AND WATER CONSERVATION DISTRICT

DESIGNED BY: K&A ENGINEERING
DRAWN BY: ADA
DATE DRAWN: JUNE 2021
P8 NUMBER: 226078

RECOMMENDED FOR APPROVAL BY: DATE 7-27-2021

APPROVED BY: DATE 8/4/2021

LAKELAND VILLAGE MDP
LINE H
STORM DRAIN
LINE H SEDIMENT BASIN
SURVEY CONTROL

PROJECT NO. 3-0-00020

DRAWING NO. 0-0000

SHEET NO. 37 OF 65

CONSTRUCTION DRAWING SET DATED 22 JUNE, 2021

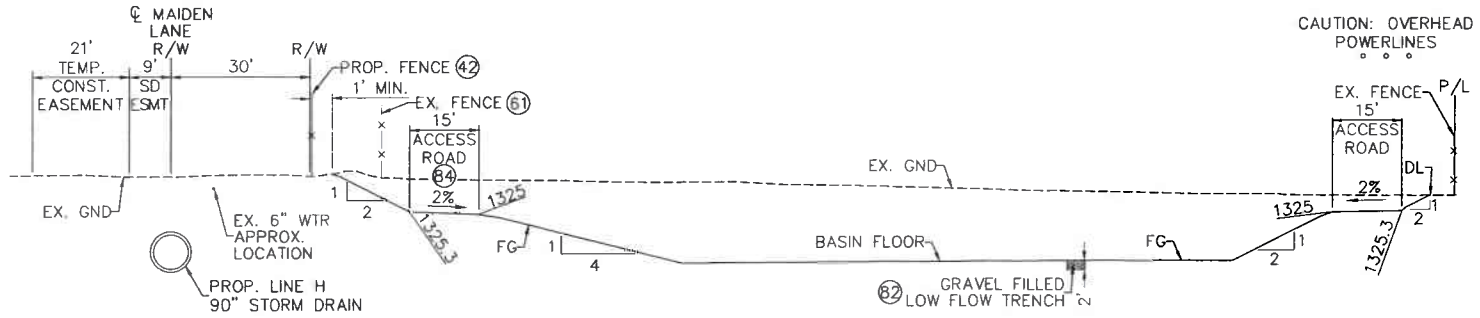

(A/36) SECTION
SCALE: 1"=20'

CONSTRUCTION NOTES

(42) INSTALL 6' HIGH CHAIN LINK FENCE PER RCFC&WCD STD. MB01

(61) REMOVE & LEGALLY DISPOSE OF INTERFERING PORTIONS OF EXISTING FENCE

(76) PLACE 48" THICK CLASS VII (1/2 TON) ROCK SLOPE PROTECTION OVER 6" FILTER MATERIAL OVER FILTER FABRIC PER DETAIL ON SHEET 51

(82) CONSTRUCT LOW FLOW GRAVEL TRENCH 4'WIDE x 2'DEEP PER DETAIL ON SHEET 38

(84) GRADE MAINTENANCE ROAD; WITHIN LIMITS AND TO GRADE AS SHOWN OR AS DIRECTED BY THE ENGINEER, PAVE WITH 3" CRUSHED ROCK OVER COMPACTED NATIVE

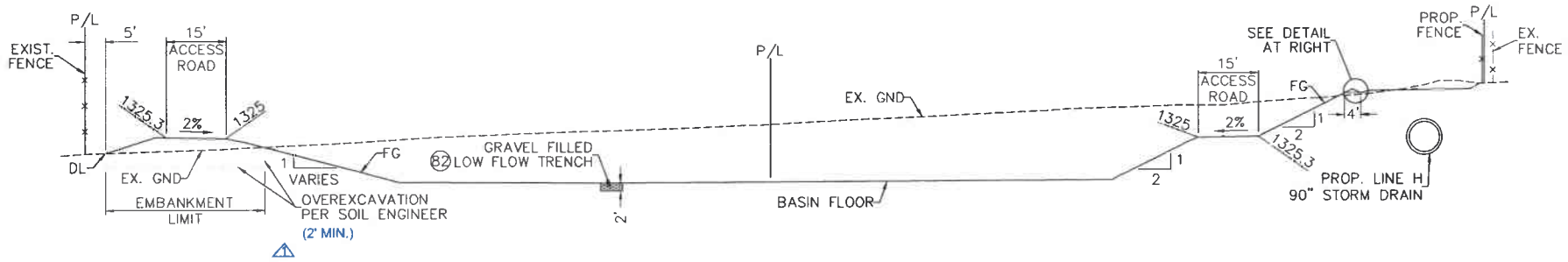

(B/36) SECTION
SCALE: 1"=20'

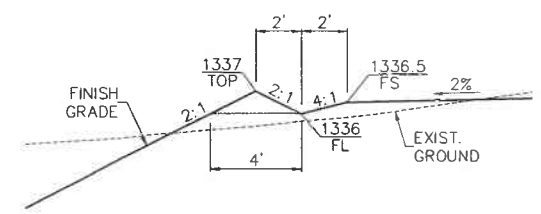

TOP OF SLOPE DETAIL
NTS

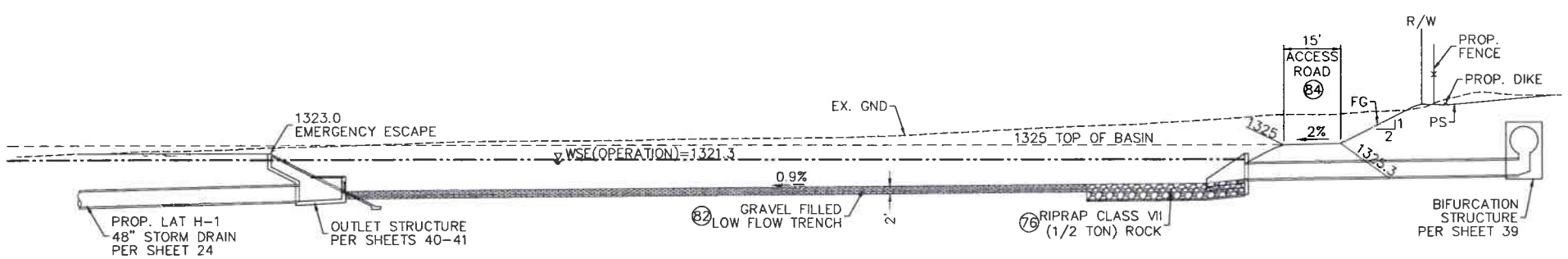

(C/36) SECTION
SCALE: 1"=20'

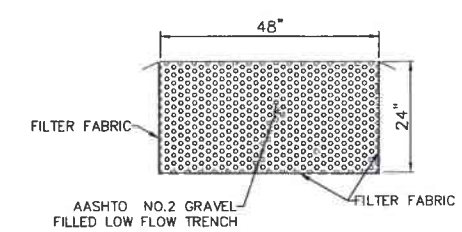

(82) LOW FLOW DITCH
NTS

20' 0' 20'
SCALE 1"=20'

COUNTY FILE No. 970-B

K&A Engineering, Inc.
ENGINEERING
LAND PLANNING
SURVEYING
357 N. SHERIDAN STREET
SUITE 117
CORONA, CALIFORNIA 92880
TEL. (951) 279-1800
FAX (951) 279-4380

REGISTERED PROFESSIONAL ENGINEER DONALD W. BEACH No. 28949 CIVIL STATE OF CALIFORNIA

ENGINEER R.C.E. 28949 DATE 8/16/2021

COUNTY OF RIVERSIDE
TRANSPORTATION DEPARTMENT
RECMD COUNTY OVERSIGHT ENGINEER 8/4/21
APPROVES AS TO COMPLIANCE WITH APPLICABLE COUNTY STANDARDS AND PRACTICES.
REGISTRATION # 76450 DATE SIGNED

Don't Dig...Until You Call U.S.A. Toll Free
DIAL 811
for the location of buried utility lines.
Don't disrupt vital services.
TWO WORKING DAYS BEFORE YOU DIG

BENCH MARK
NAD83 Epoch 2011, CCS83, ZONE 6-
NAVD88(COH88)
RCFC B.M. Z 15502
SET MAG NAIL W/ RCFC WCD TAG FLUSH
E 6,226,565.52 N 2,177,350.50
ELEV.: 1,401.46 SURVEY DATE: 02/2013

REF.	DESCRIPTION	APPR.	DATE
1	OVEREXCAVATION MIN. DEPTH ADDED TO SECTION B-B	E.A.	10/13/21

REVISIONS

RIVERSIDE COUNTY FLOOD CONTROL AND WATER CONSERVATION DISTRICT
DESIGNED BY: K&A ENGINEERING
DRAWN BY: ADA
DATE DRAWN: JUNE 2021
PB NUMBER: 226078
RECOMMENDED FOR APPROVAL BY: DATE 7-27-2021
APPROVED BY: DATE 8/4/2021

LAKELAND VILLAGE MDP
SEDIMENT BASIN
STORM DRAIN
LINE H SEDIMENT BASIN
SECTIONS

PROJECT NO. 3-0-00020
DRAWING NO. 3-0207
SHEET NO. 38 OF 65

CONSTRUCTION DRAWING SET DATED 22 JUNE, 2021

Drawing: R:\234638\Final\Storm Drain\038 - PLN - SD - LAKELAND - 038.dwg Layout: 38 SECTIONS Saved: 1/20/2021 12:36 PM Plotted: 8/16/2021 12:29 PM By: Patrick Brown

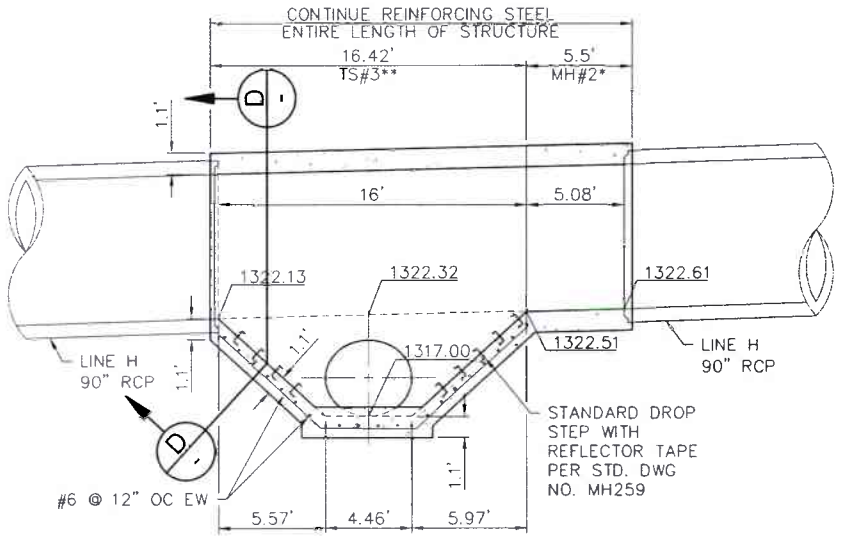

A SECTION
SCALE: 1" = 5'

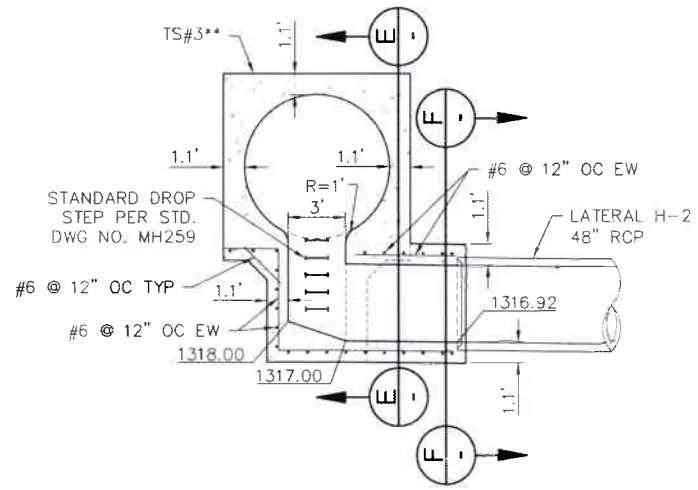

B SECTION
SCALE: 1" = 5'

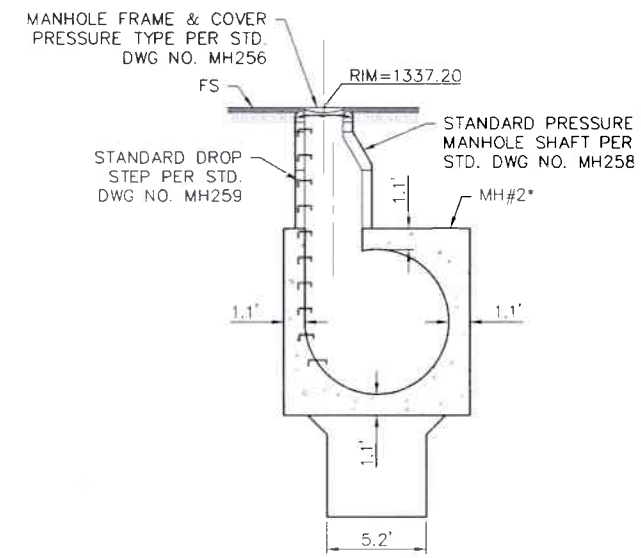

C SECTION
SCALE: 1" = 5'

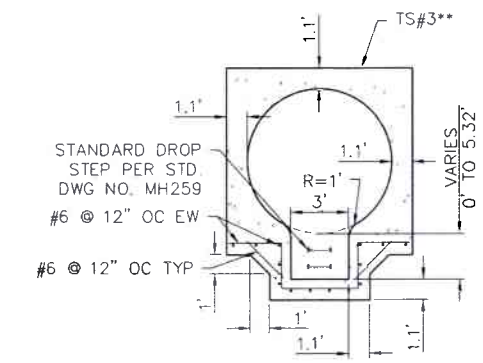

D SECTION
SCALE: 1" = 5'

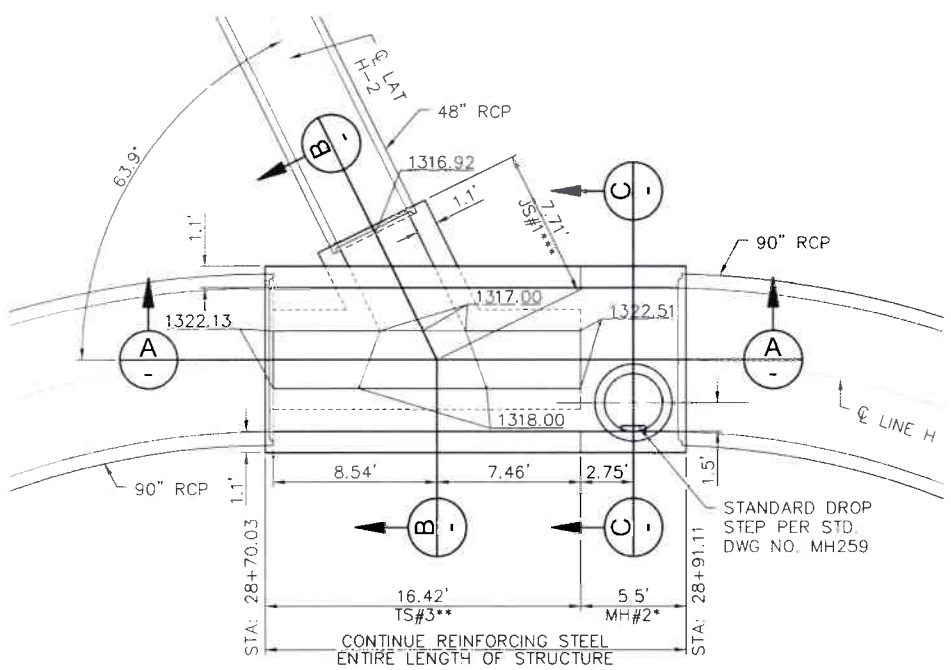

29 BIFURCATION STRUCTURE

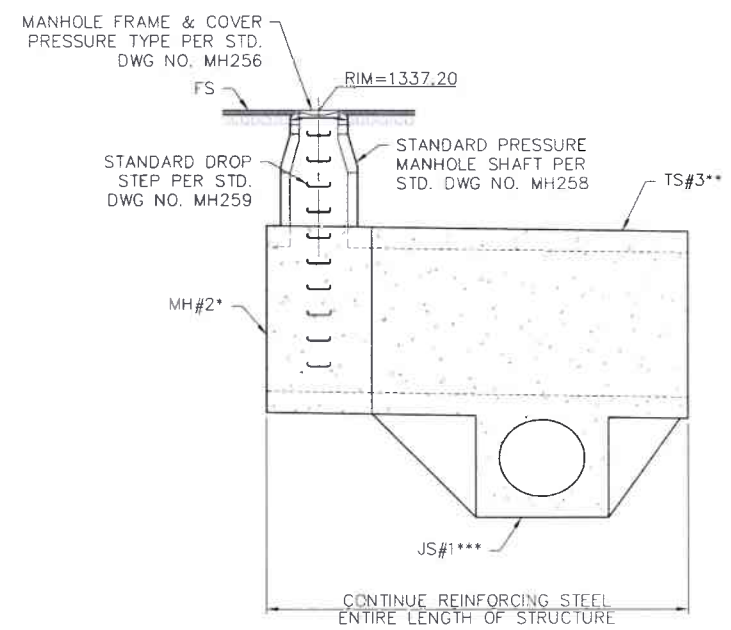

E SECTION
SCALE: 1" = 5'

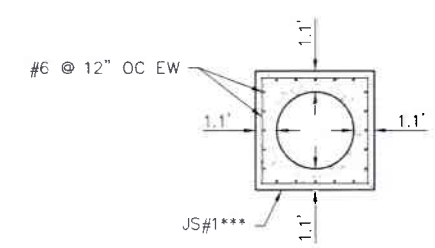

F SECTION
SCALE: 1" = 5'

5' 0' 5'
SCALE 1"=5'

ENGINEER'S NOTICE TO CONTRACTOR:

1. DETAILS & SECTIONS SHOWN FOR BIFURCATION STRUCTURE ARE MODIFICATIONS TO RCFC&WCD STANDARDS;
   - MH#2* – MH252
   - TS#3** – TS303
   - JS#1*** – JS226
2. FOR CONCRETE THICKNESS & REINFORCING STEEL NOT SHOWN, REFER TO THE APPROPRIATE STANDARD DRAWING.

CONSTRUCTION NOTES

29 CONSTRUCT BIFURCATION STRUCTURE PER DETAIL HEREON

CONSTRUCTION DRAWING SET DATED 22 JUNE, 2021

K&A Engineering, Inc.
ENGINEERING
LAND PLANNING
SURVEYING
357 N. SHERIDAN STREET
SUITE 117
CORONA, CALIFORNIA 92880
TEL. (951) 279-1800
FAX. (951) 279-4320

REGISTERED PROFESSIONAL ENGINEER DONALD W. BERSH No. 28949 CIVIL STATE OF CALIFORNIA

Donald Bersh 8/16/2021
ENGINEER R.C.E. 28949 DATE

COUNTY FILE No. 970-B
COUNTY OF RIVERSIDE
TRANSPORTATION DEPARTMENT
RECMD. COUNTY OVERSIGHT ENGINEER 8/11/21
APPROVES AS TO COMPLIANCE WITH APPLICABLE COUNTY STANDARDS AND PRACTICES
REGISTRATION # 76450 DATE SIGNED

Don't Dig...Until You Call U.S.A. Toll Free
DIAL 811
for the location of buried utility lines.
Don't disrupt vital services.
BURIED CABLE
TWO WORKING DAYS BEFORE YOU DIG

BENCH MARK
(NAD83 Epoch 2011, CCS83, ZONE 6-NAVD88(CON88))
RCFC B.M. Z 15502
SET MAG NAIL W/ RCFC WCD TAG FLUSH
E 6,226,565.52 N 2,177,350.50
ELEV.: 1,401.46 SURVEY DATE: 02/2013

REF	DESCRIPTION	APPR.	DATE
	REVISIONS		

RIVERSIDE COUNTY FLOOD CONTROL AND WATER CONSERVATION DISTRICT
DESIGNED BY: K&A ENGINEERING
DRAWN BY: ADA
DATE DRAWN: JUNE 2021
P8 NUMBER: 226078
RECOMMENDED FOR APPROVAL BY: DATE 7-27-2021
APPROVED BY: DATE 8/4/2021

LAKELAND VILLAGE MDP
STORM DRAIN
LINE H SEDIMENT BASIN
BIFURCATION STRUCTURE DETAILS

PROJECT NO 3-0-00020
DRAWING NO 3-0207
SHEET NO. 39 OF 65

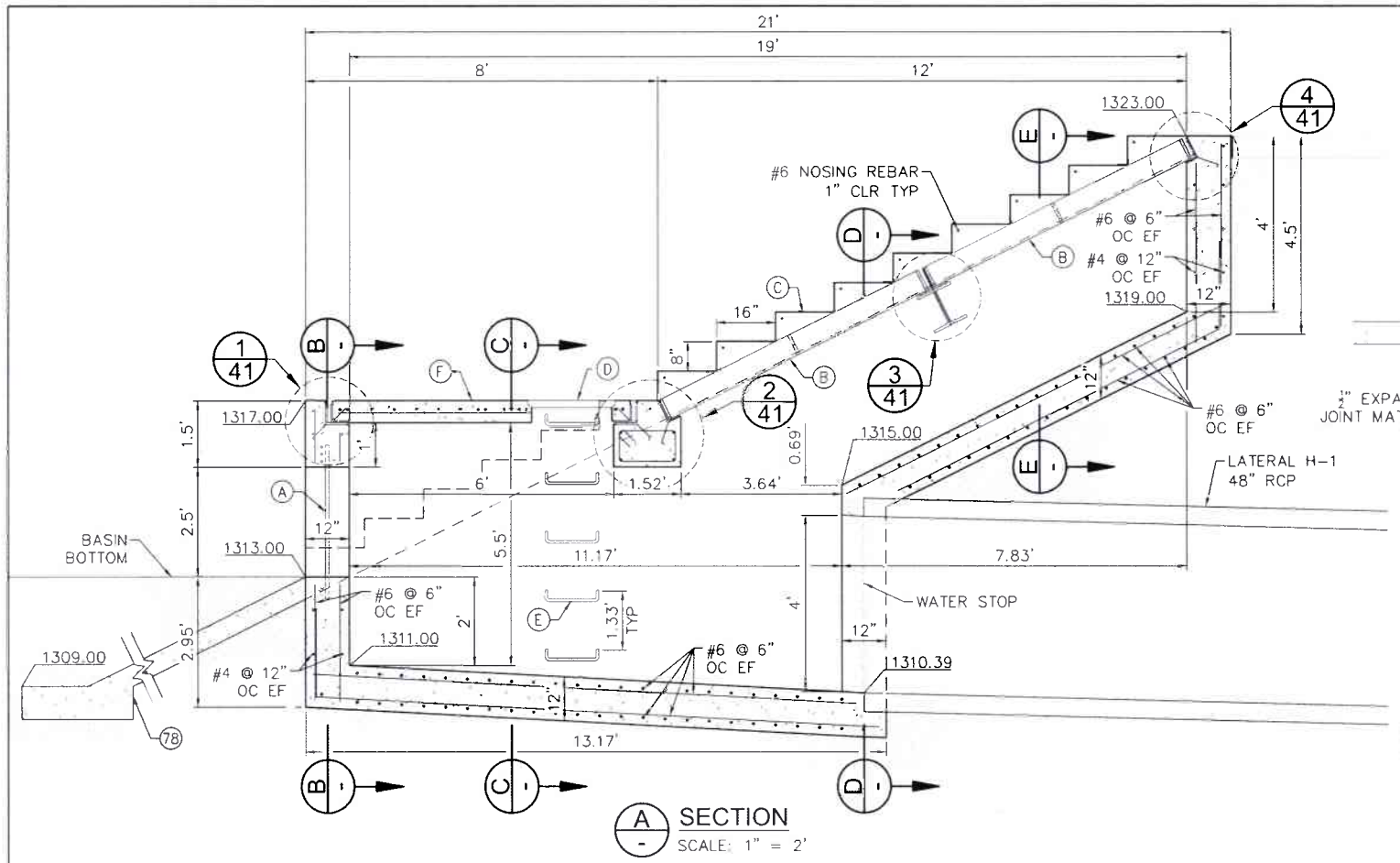

A SECTION
SCALE: 1" = 2'

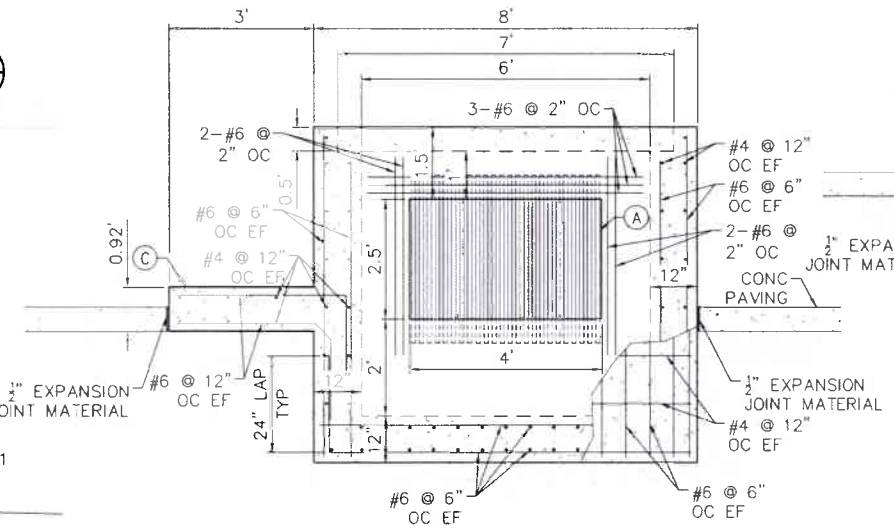

B SECTION
SCALE: 1" = 2'

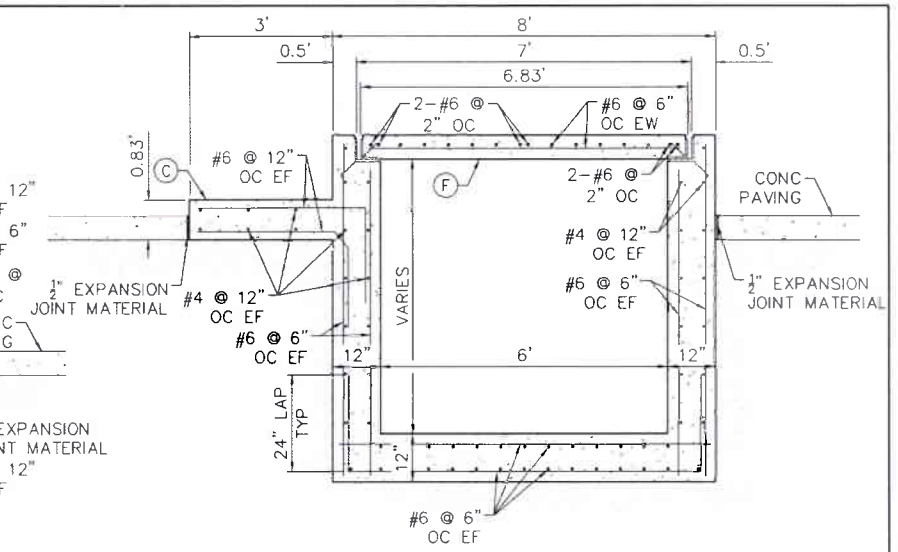

C SECTION
SCALE: 1" = 2'

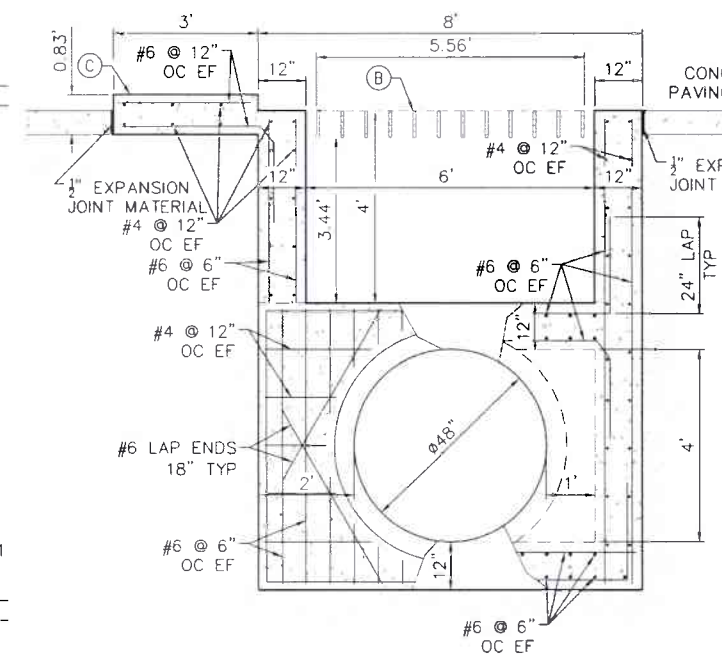

D SECTION
SCALE: 1" = 2'

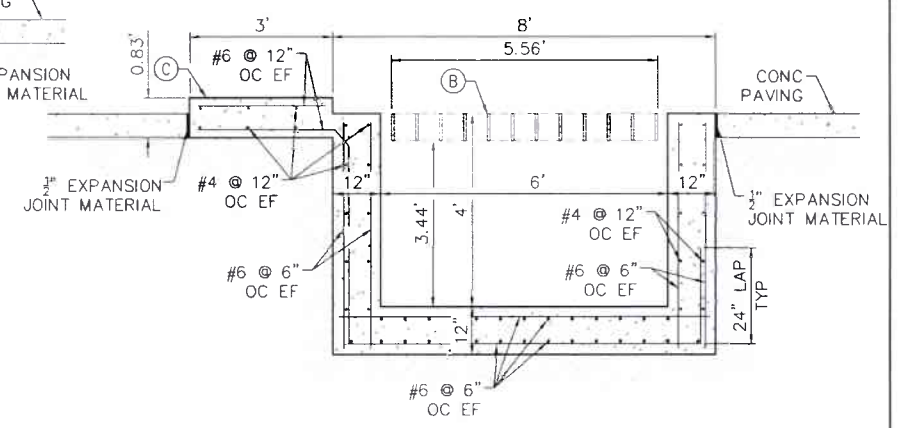

E SECTION
SCALE: 1" = 2'

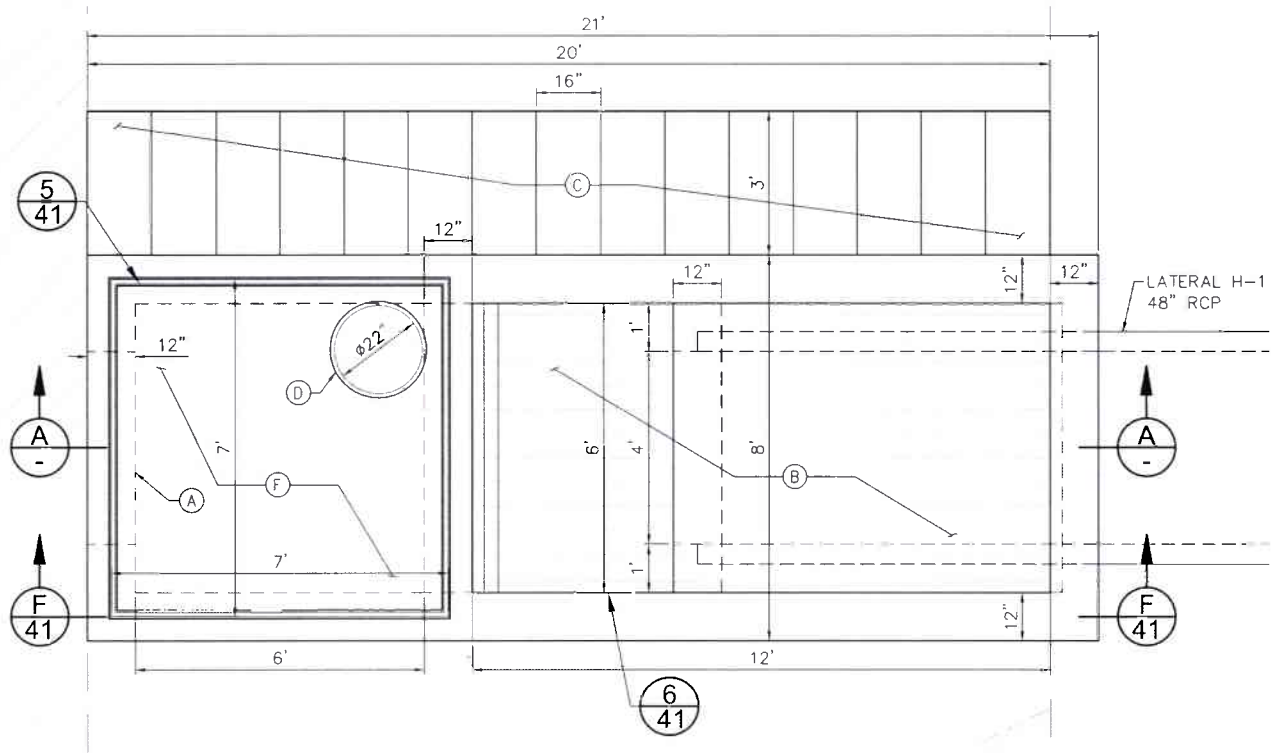

2' 0' 2'
SCALE 1"=2'

(88) BASIN OUTLET STRUCTURE PLAN

CONSTRUCTION NOTES

(78) CONSTRUCT 6" CONCRETE SLOPE PAVING WITH #4@12" O.C. EACH WAY 2" CLEAR ON TOP PER DETAIL ON SHEET 36

(88) CONSTRUCT BASIN OUTLET STRUCTURE PER DETAILS HEREON

(A) CONSTRUCT 48"W X 30"H SOUTH SIDE OPENING WITH 1" ø BARS @ 2" O.C. PER RCFC&WCD STD. CB110 & DETAILS HEREON

(B) CONSTRUCT BASIN OUTLET STRUCTURE GRATING PER DETAILS HEREON

(C) CONSTRUCT 8"x16" CONCRETE STEPS, 36" WIDE, ROUGH BROOM FINNISH PER DETAILS HEREON

(D) INSTALL MANHOLE FRAME & COVER PER RCFC&WCD STD. CB103

(E) INSTALL STANDARD DROP STEPS PER RCFC&WCD STD. CB110 & STD. MH259

(F) CONSTRUCT BASIN OUTLET STRUCTURE LID PER DETAILS ON SHEET 41

CONSTRUCTION DRAWING SET DATED 22 JUNE, 2021

K&A Engineering, Inc.
ENGINEERING
LAND PLANNING
SURVEYING
357 N. SHERIDAN STREET
SUITE 117
CORONA, CALIFORNIA 92880
TEL (951) 279-1800
FAX (951) 279-4380
Donald Bergh 8/16/2021
ENGINEER R.C.E. 28949 DATE
REGISTERED PROFESSIONAL ENGINEER DONALD C. BERGH No. 28949 CIVIL STATE OF CALIFORNIA

COUNTY FILE No. 970-B

COUNTY OF RIVERSIDE
TRANSPORTATION DEPARTMENT
RECMD COUNTY OVERSIGHT ENGINEER 8/11/21
APPROVES AS TO COMPLIANCE WITH APPLICABLE COUNTY STANDARDS AND PRACTICES
REGISTRATION # 70450 DATE SIGNED

Don't Dig...Until You Call U.S.A. Toll Free
DIAL 811
for the location of buried utility lines.
Don't disrupt vital services.
TWO WORKING DAYS BEFORE YOU DIG

BENCH MARK
NAD83 Epoch 2011, CCS83, ZONE 6-
NAVD88(COH88)
RCFC B.M. Z 15502
SET MAG NAIL W/ RCFC WCD TAG FLUSH
E 6,226,565.52 N 2,177,350.50
ELEV: 1,401.46 SURVEY DATE: 02/2013

REF	DESCRIPTION	APPR	DATE
	REVISIONS		

RIVERSIDE COUNTY FLOOD CONTROL AND WATER CONSERVATION DISTRICT

DESIGNED BY: K&A ENGINEERING
DRAWN BY: ADA
DATE DRAWN: JUNE 2021
PB NUMBER: 226078
RECOMMENDED FOR APPROVAL BY: DATE 7-27-2021
APPROVED BY: DATE 8/4/2021

LAKELAND VILLAGE MDP

STORM DRAIN
LINE H SEDIMENT BASIN
OUTLET STRUCTURE DETAILS

PROJECT NO. 3-0-00020
DRAWING NO. 3-0207
SHEET NO. 40 OF 65

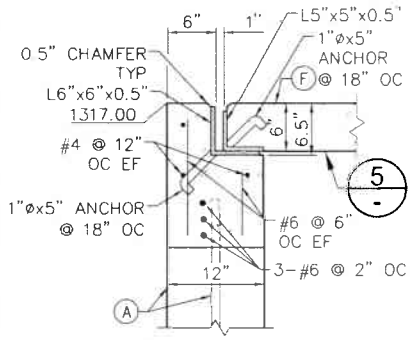

1/40 DETAIL
SCALE: 1" = 1'

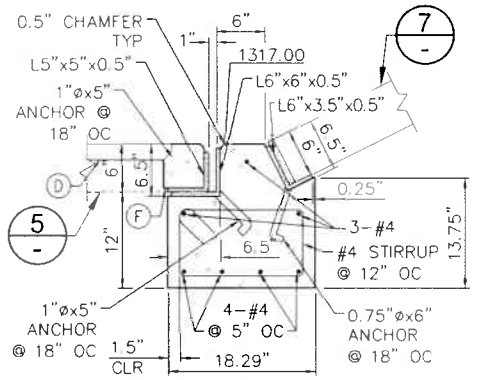

2/40 DETAIL
SCALE: 1" = 1'

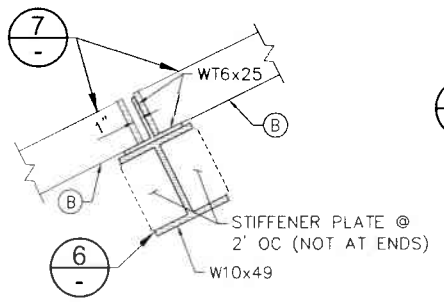

3/40 DETAIL
SCALE: 1" = 1'

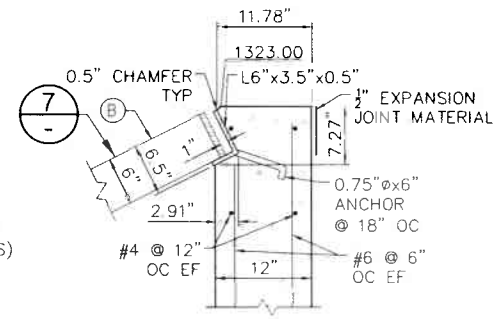

4/40 DETAIL
SCALE: 1" = 1'

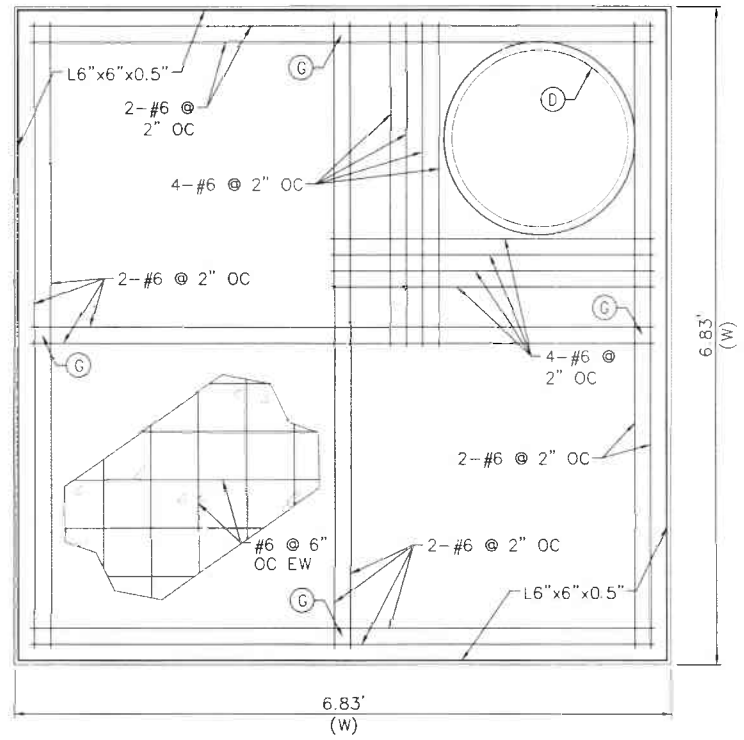

5/40 CONCRETE LID DETAIL
SCALE: 1" = 1'

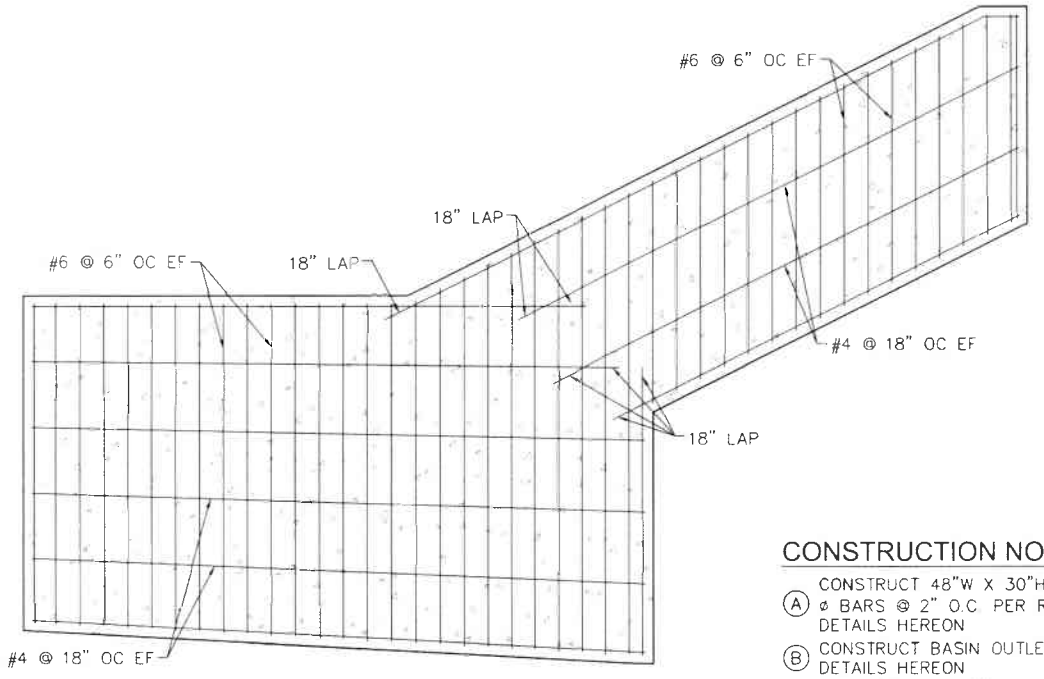

F/40 SECTION
SCALE: 1" = 2'

CONSTRUCTION NOTES

- (A) CONSTRUCT 48"W X 30"H SOUTH SIDE OPENING WITH 1" ø BARS @ 2" O.C. PER RCFC&WCD STD. CB110 & DETAILS HEREON
- (B) CONSTRUCT BASIN OUTLET STRUCTURE GRATING PER DETAILS HEREON
- (C) CONSTRUCT 8"x16" CONCRETE STEPS, 36" WIDE, ROUGH BROOM FINNISH PER DETAILS HEREON
- (D) INSTALL MANHOLE FRAME & COVER PER RCFC&WCD STD. CB103
- (E) INSTALL STANDARD DROP STEPS PER RCFC&WCD STD. CB110 & STD. MH259
- (F) CONSTRUCT BASIN OUTLET STRUCTURE LID PER DETAILS HEREON
- (G) CONSTRUCT LIFT FOR BASIN OUTLET STRUCTURE LID PER DETAIL HEREON

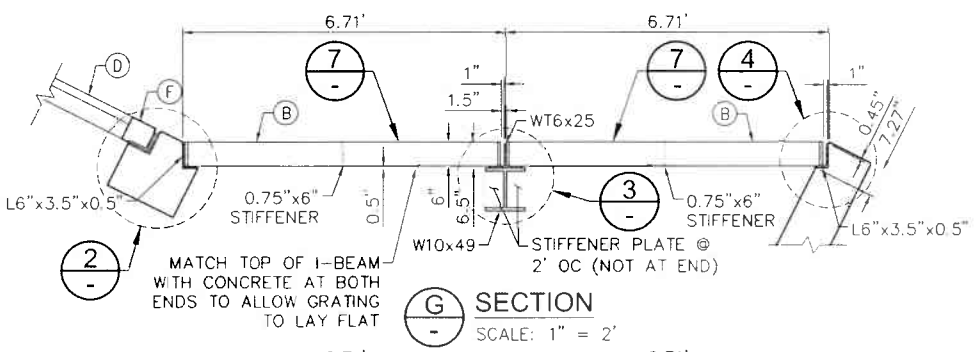

G/- SECTION
SCALE: 1" = 2'

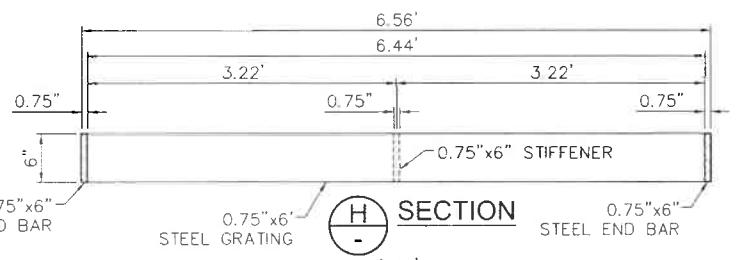

H/- SECTION
SCALE: 1" = 1'

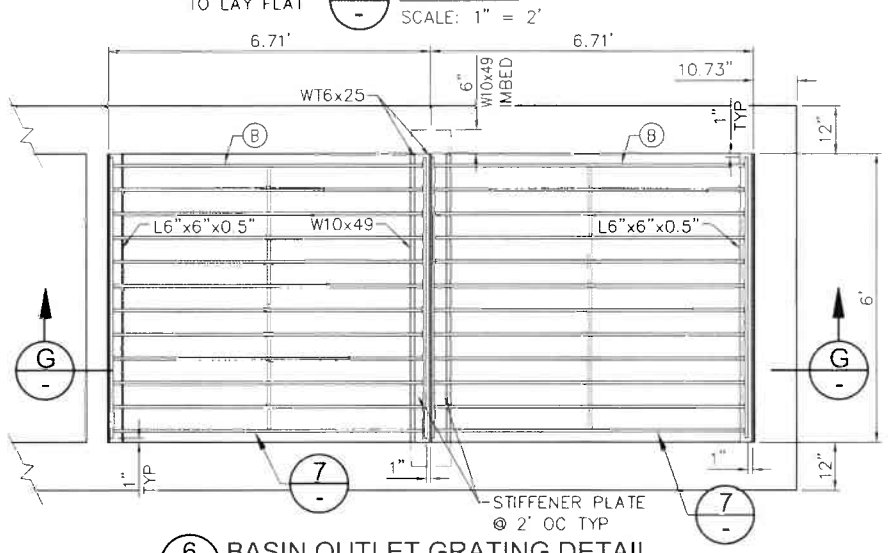

6/40 BASIN OUTLET GRATING DETAIL
SCALE: 1" = 2'

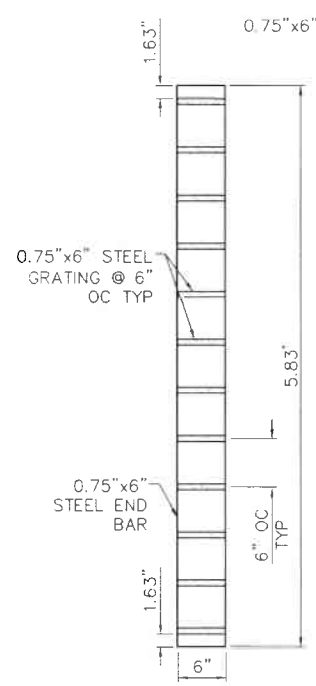

I/- SECTION
SCALE: 1" = 1'

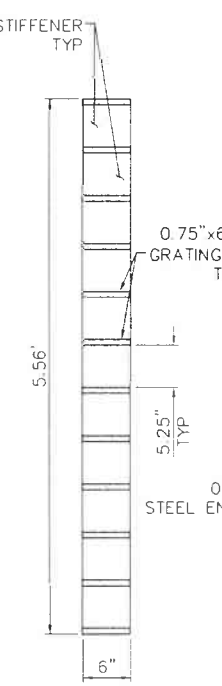

J/- SECTION
SCALE: 1" = 1'

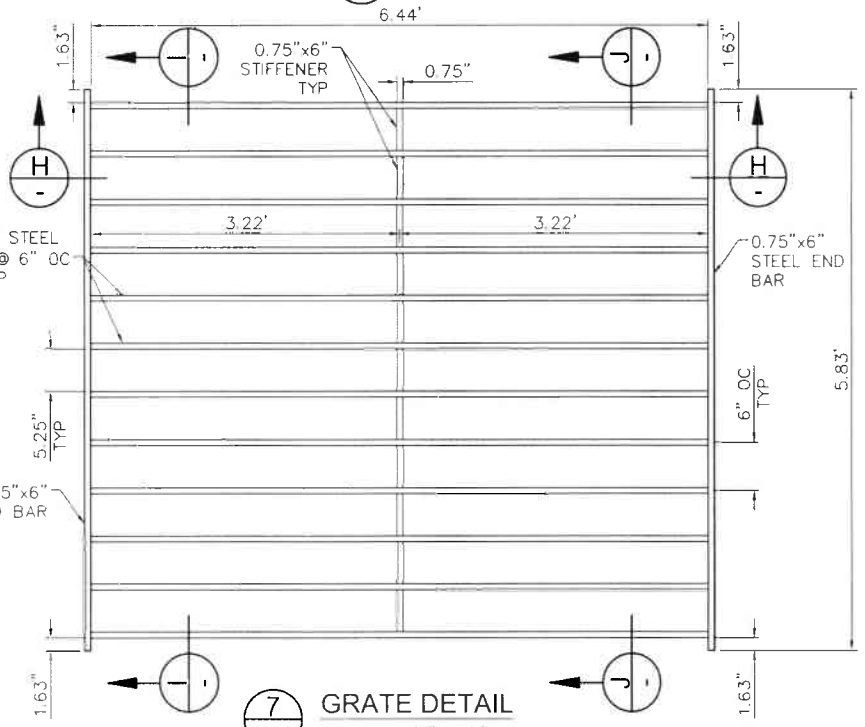

7/- GRATE DETAIL
SCALE: 1" = 1'

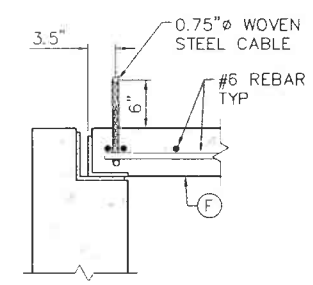

K/- SECTION
SCALE: 1" = 1'

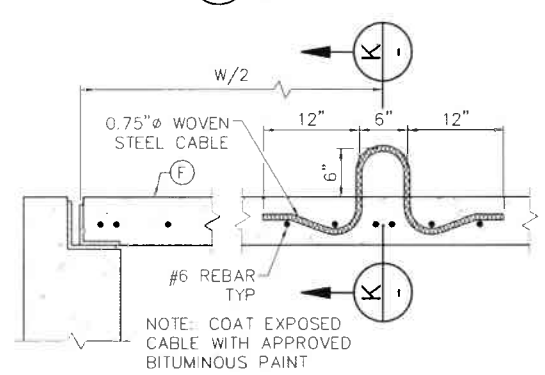

G LIFT DETAIL
SCALE: 1" = 1'

CONSTRUCTION DRAWING SET DATED 22 JUNE, 2021

K&A Engineering, Inc.
ENGINEERING
LAND PLANNING
SURVEYING
357 N. SHERIDAN STREET
SUITE 117
CORONA, CALIFORNIA 92880
TEL (951) 279-1800
FAX (951) 279-4380

REGISTERED PROFESSIONAL ENGINEER DONALD A. BERSCH No. 28949 CIVIL STATE OF CALIFORNIA

Donald Bersch 8/16/2021
ENGINEER R.C.E. 28949 DATE:

COUNTY FILE No. 970-B
COUNTY OF RIVERSIDE
TRANSPORTATION DEPARTMENT
RECMD COUNTY OVERSIGHT ENGINEER 8/11/21
APPROVES AS TO COMPLIANCE WITH APPLICABLE COUNTY STANDARDS AND PRACTICES
REGISTRATION # 76450 DATE SIGNED

Don't Dig...Until You Call U.S.A. Toll Free
DIAL 811
for the location of buried utility lines.
Don't disrupt vital services.
BURIED CABLE
TWO WORKING DAYS BEFORE YOU DIG

BENCH MARK
NAD83 Epoch 2011, CCS83, ZONE 6-
NAVD88(CGH88)
RCFC B.M. Z 15502
SET MAG NAIL W/ RCFC WCD TAG FLUSH
E 6,226,565.52 N 2,177,350.50
ELEV.: 1,401.46 SURVEY DATE: 02/2013

REF.	REVISIONS	APPR	DATE

RIVERSIDE COUNTY FLOOD CONTROL AND WATER CONSERVATION DISTRICT
DESIGNED BY K&A ENGINEERING
DRAWN BY ADA
DATE DRAWN JUNE 2021
PB NUMBER 226078
RECOMMENDED FOR APPROVAL BY: DATE 7-27-2021
APPROVED BY: DATE 8/4/2021

LAKELAND VILLAGE MDP

STORM DRAIN
LINE H SEDIMENT BASIN
OUTLET STRUCTURE DETAILS

PROJECT NO 3-0-00020
DRAWING NO 3-0207
SHEET NO. 41 OF 65

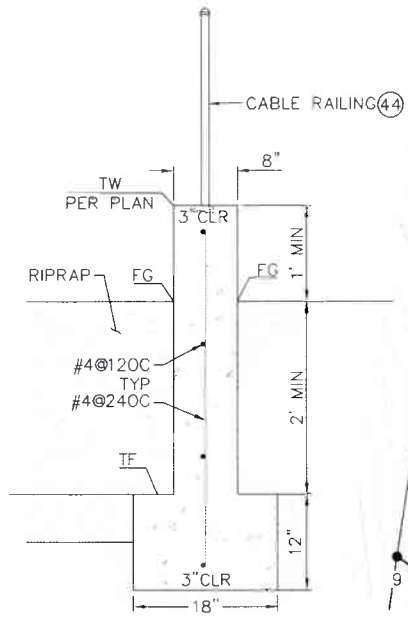

(95) FLOOD WALL DETAIL
NTS

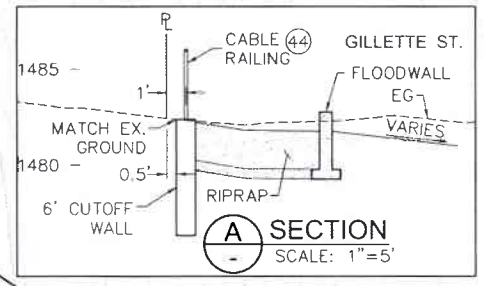

A SECTION
SCALE: 1"=5'

B SECTION
SCALE: 1"=10'

SEE ADDITIONAL SECTIONS ON SHEET 44

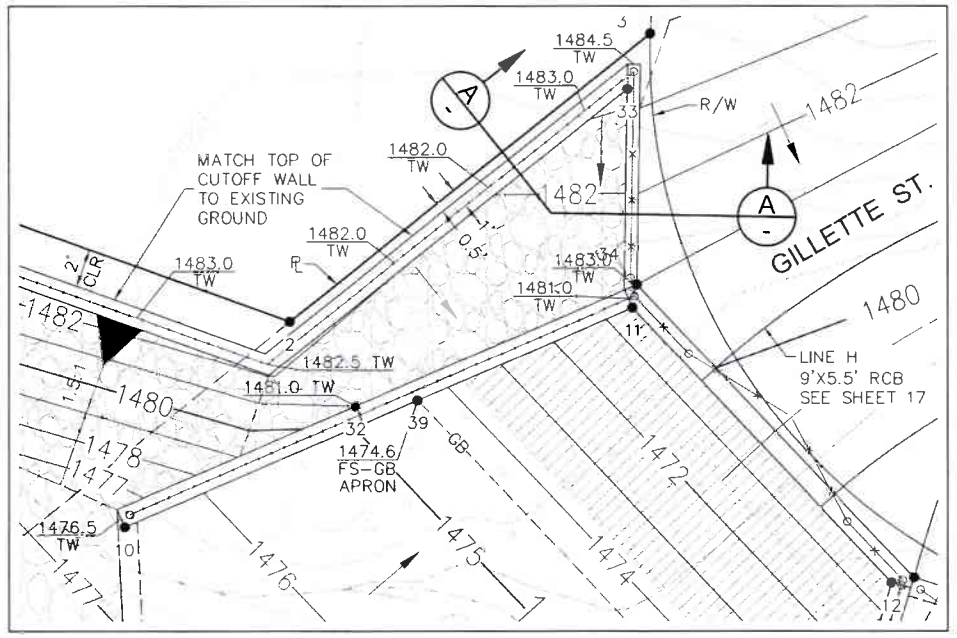

DETAIL A
NTS

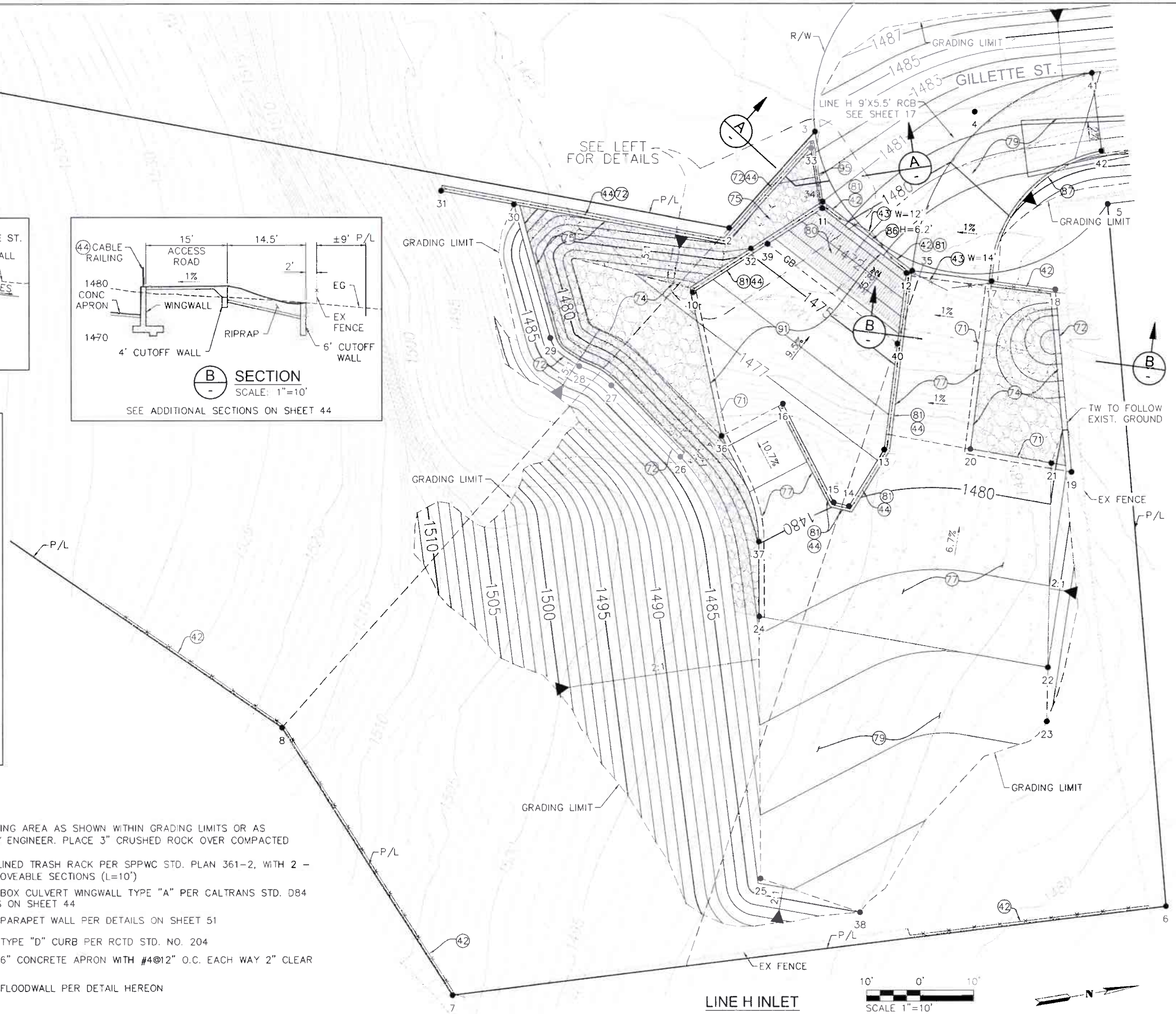

LINE H INLET

CONSTRUCTION NOTES

(42) INSTALL 6' HIGH CHAIN LINK FENCE PER RCFC&WCD STD. M801

(43) INSTALL DOUBLE DRIVE GATE PER RCFC&WCD STD. M801, W PER PLAN

(44) INSTALL CABLE RAILING PER CALTRANS STD. B11-47

(71) CONSTRUCT 4' CUTOFF WALL WITH SLAB TIE-IN PER DETAIL ON SHEET 51

(72) CONSTRUCT 6' CUTOFF WALL PER DETAIL ON SHEET 51

(74) PLACE 36" THICK CLASS V (1/4 TON) ROCK SLOPE PROTECTION OVER 6" FILTER MATERIAL OVER FILTER FABRIC PER DETAIL ON SHEET 51

(75) PLACE 24" THICK CONCRETED CLASS III (150LBS) ROCK SLOPE PROTECTION OVER 6" FILTER MATERIAL OVER FILTER FABRIC PER DETAIL ON SHEET 51

(77) CONSTRUCT 6" CONCRETE ACCESS ROAD WITH #4@12" O.C. EACH WAY 2" CLEAR ON TOP

(79) GRADE LOADING AREA AS SHOWN WITHIN GRADING LIMITS OR AS DIRECTED BY ENGINEER. PLACE 3" CRUSHED ROCK OVER COMPACTED NATIVE

(80) INSTALL INCLINED TRASH RACK PER SPPWC STD. PLAN 361-2, WITH 2 - 3' WIDE REMOVEABLE SECTIONS (L=10')

(81) CONSTRUCT BOX CULVERT WINGWALL TYPE "A" PER CALTRANS STD. D84 AND DETAILS ON SHEET 44

(86) CONSTRUCT PARAPET WALL PER DETAILS ON SHEET 51

(87) CONSTRUCT TYPE "D" CURB PER RCTD STD. NO. 204

(91) CONSTRUCT 6" CONCRETE APRON WITH #4@12" O.C. EACH WAY 2" CLEAR ON TOP

(95) CONSTRUCT FLOODWALL PER DETAIL HEREON

CONSTRUCTION DRAWING SET DATED 22 JUNE, 2021

K&A Engineering, Inc.
ENGINEERING
LAND PLANNING
SURVEYING
357 N. SHERIDAN STREET
SUITE 117
CORONA, CALIFORNIA 92880
TEL. (951) 279-1800
FAX (951) 279-4380

REGISTERED PROFESSIONAL ENGINEER DONALD W. BERK No 28949 CIVIL STATE OF CALIFORNIA

Donald Berk 8/16/2021
ENGINEER R.C.E. 28949 DATE

COUNTY FILE No. 970-B

COUNTY OF RIVERSIDE
TRANSPORTATION DEPARTMENT

RECMD COUNTY OVERSIGHT ENGINEER 8/11/21

APPROVES AS TO COMPLIANCE WITH APPLICABLE COUNTY STANDARDS AND PRACTICES

REGISTRATION # 76450 DATE SIGNED

Don't Dig...Until You Call U.S.A. Toll Free
DIAL 811
for the location of buried utility lines.
Don't disrupt vital services.
TWO WORKING DAYS BEFORE YOU DIG

BENCH MARK
NAD83 Epoch 2011, CCS83, ZONE 6-
NAVD88(CDH88)

RCFC B.M. Z 15502
SET MAG NAIL W/ RCFC WCD TAG FLUSH

E 6,226,065.52 N 2,177,359.50

ELEV. 1,401.46 SURVEY DATE 02/2013

REF.	DESCRIPTION	APPR	DATE
	REVISIONS		

RIVERSIDE COUNTY FLOOD CONTROL AND WATER CONSERVATION DISTRICT

DESIGNED BY: K&A ENGINEERING
DRAWN BY: ADA
DATE DRAWN: JUNE 2021
PB NUMBER: 226078

RECOMMENDED FOR APPROVAL BY: DATE 7-27-2021

APPROVED BY: DATE 8/4/2021

LAKELAND VILLAGE MDP

STORM DRAIN
LINE H
INLET GRADING & CONTROL

PROJECT NO 3-0-00020
DRAWING NO. 3-0207
SHEET NO. 42 OF 65

PROJECT LIMITS		
PT.	NORTHING	EASTING
1	2176978.39	6225141.09
2	2177152.27	6225203.49
3	2177171.02	6225188.54
4	2177200.99	6225189.69
5	2177222.57	6225210.53
6	2177212.19	6225340.14
7	2177078.75	6225335.00
8	2177055.60	6225281.18
9	2176962.22	6225191.82

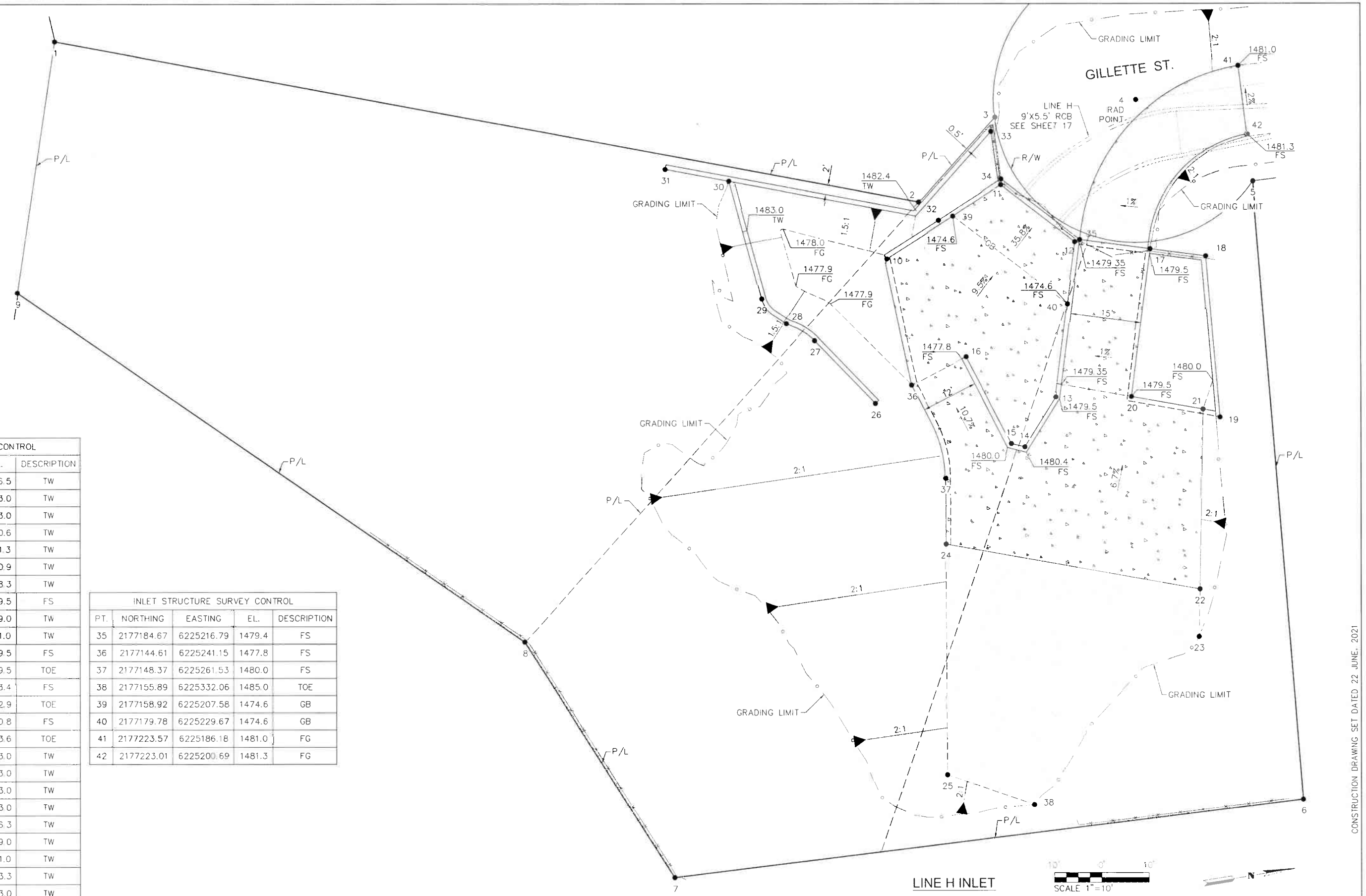

INLET STRUCTURE SURVEY CONTROL				
PT.	NORTHING	EASTING	EL.	DESCRIPTION
10	2177143.69	6225214.17	1476.5	TW
11	2177170.05	6225202.77	1483.0	TW
12	2177183.55	6225217.05	1483.0	TW
13	2177174.15	6225248.51	1480.6	TW
14	2177166.01	6225257.78	1481.3	TW
15	2177163.32	6225256.63	1480.9	TW
16	2177156.97	6225237.12	1478.3	TW
17	2177199.04	6225221.08	1479.5	FS
18	2177210.40	6225224.48	1479.0	TW
19	2177207.87	6225258.29	1481.0	TW
20	2177190.09	6225251.03	1479.5	FS
21	2177204.44	6225256.03	1479.5	TOE
22	2177197.70	6225293.14	1483.4	FS
23	2177195.92	6225302.92	1482.9	TOE
24	2177146.21	6225275.19	1480.8	FS
25	2177138.70	6225322.93	1483.6	TOE
26	2177136.50	6225243.74	1483.0	TW
27	2177126.03	6225228.64	1483.0	TW
28	2177120.77	6225224.23	1483.0	TW
29	2177116.37	6225218.23	1483.0	TW
30	2177113.61	6225192.81	1486.3	TW
31	2177100.70	6225188.17	1489.0	TW
32	2177155.67	6225207.90	1481.0	TW
33	2177169.81	6225191.42	1483.3	TW
34	2177170.30	6225201.57	1483.0	TW

INLET STRUCTURE SURVEY CONTROL				
PT.	NORTHING	EASTING	EL.	DESCRIPTION
35	2177184.67	6225216.79	1479.4	FS
36	2177144.61	6225241.15	1477.8	FS
37	2177148.37	6225261.53	1480.0	FS
38	2177155.89	6225332.06	1485.0	TOE
39	2177158.92	6225207.58	1474.6	GB
40	2177179.78	6225229.67	1474.6	GB
41	2177223.57	6225186.18	1481.0	FG
42	2177223.01	6225200.69	1481.3	FG

CONSTRUCTION DRAWING SET DATED 22 JUNE, 2021

COUNTY FILE No. 970-B

K&A Engineering, Inc.
ENGINEERING
LAND PLANNING
SURVEYING
357 N. SHERIDAN STREET
SUITE 117
CORONA, CALIFORNIA 92880
TEL (951) 279-1800
FAX (951) 279-4380

REGISTERED PROFESSIONAL ENGINEER DONALD R. BERK No. 28549 CIVIL STATE OF CALIFORNIA

ENGINEER R.C.E. 28549 DATE 8/16/2021

COUNTY OF RIVERSIDE
TRANSPORTATION DEPARTMENT
REQ'MD COUNTY OVERSIGHT ENGINEER 8/11/21
APPROVES AS TO COMPLIANCE WITH APPLICABLE COUNTY STANDARDS AND PRACTICES
REGISTRATION # 76450 DATE SIGNED

Don't Dig...Until You Call U.S.A. Toll Free DIAL 811 for the location of buried utility lines. Don't disrupt vital services.
TWO WORKING DAYS BEFORE YOU DIG

BENCH MARK
NAD83 Epoch 2011 (CCS83, ZONE 6) NAVD88(CCH88)
RCFC B.M. 2 15502
SET MAG NAIL W/ RCFC WCD TAG FLUSH
E 6,226,565.52 N 2,177,350.50
ELEV: 1,401.46 SURVEY DATE: 02/2013

REF	REVISIONS	APPR	DATE
	DESCRIPTION		

RIVERSIDE COUNTY FLOOD CONTROL AND WATER CONSERVATION DISTRICT
DESIGNED BY: K&A ENGINEERING
DRAWN BY: ADA
DATE DRAWN: JUNE 2021
P8 NUMBER: 226078
RECOMMENDED FOR APPROVAL BY: DATE 7-27-2021
APPROVED BY: DATE 8/4/2021

LAKELAND VILLAGE MDP
STORM DRAIN
LINE H INLET STRUCTURE
SURVEY CONTROL

PROJECT NO. 3-0-00020
DRAWING NO. 3-0207
SHEET NO. 43 OF 65

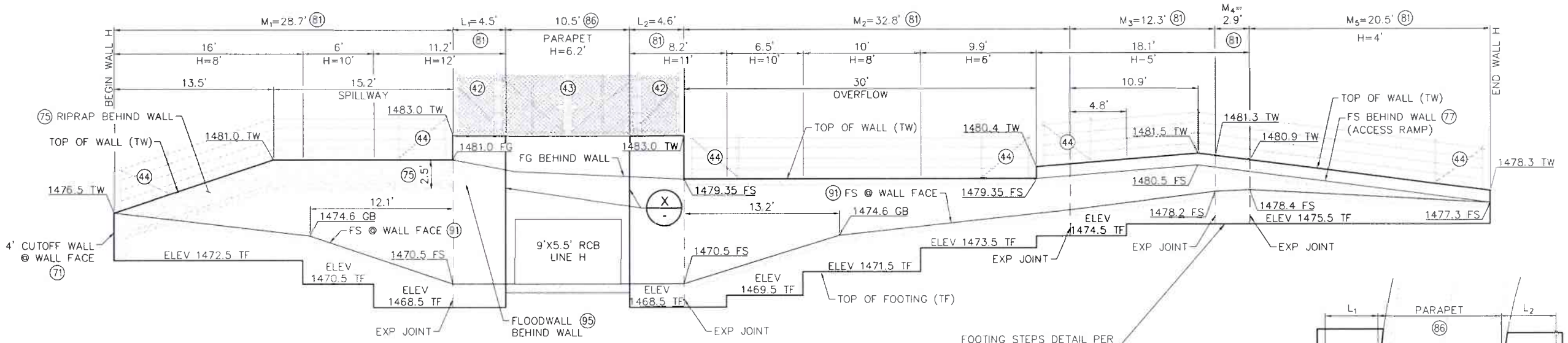

WALL H ELEVATION

SCALE: 1" = 5'

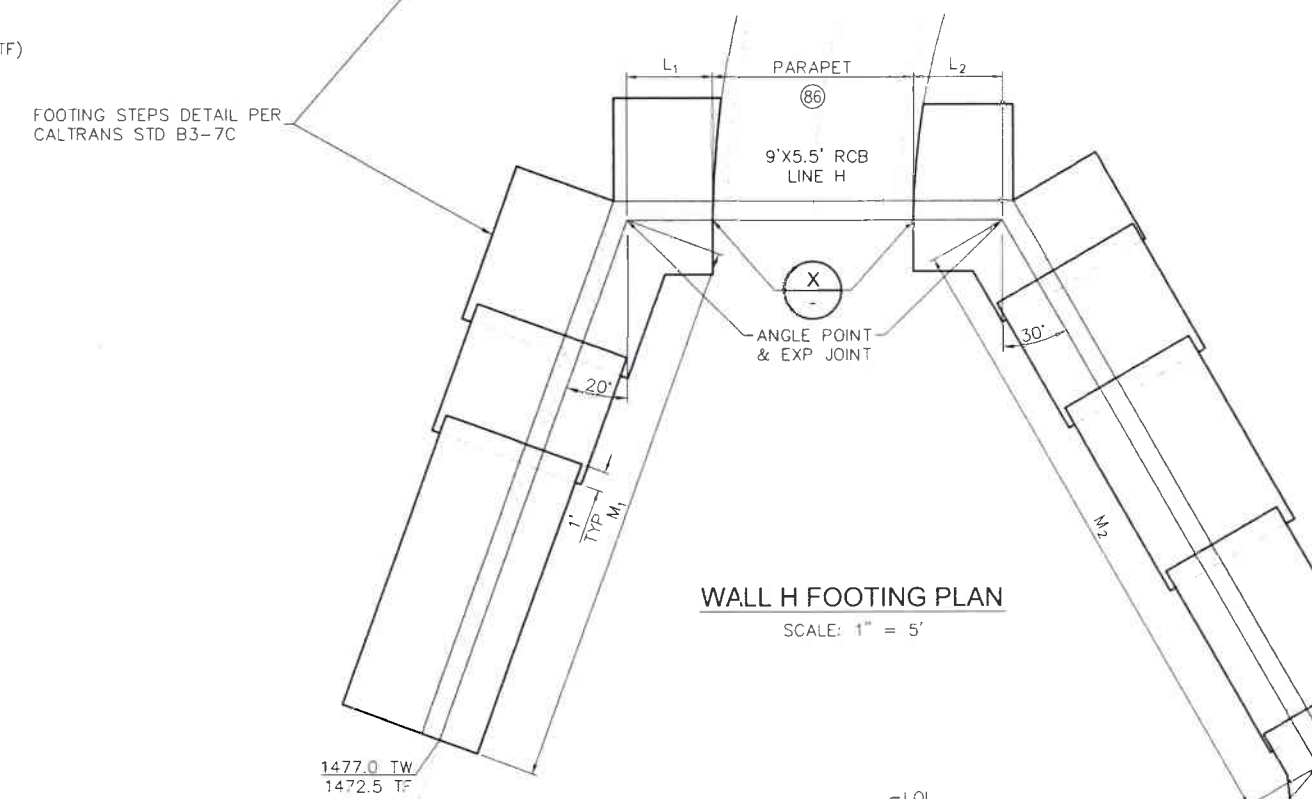

WALL H FOOTING PLAN

SCALE: 1" = 5'

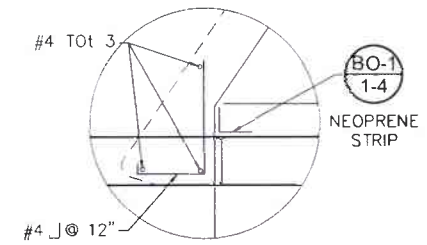

(X) DETAIL

CALTRANS STD. D84

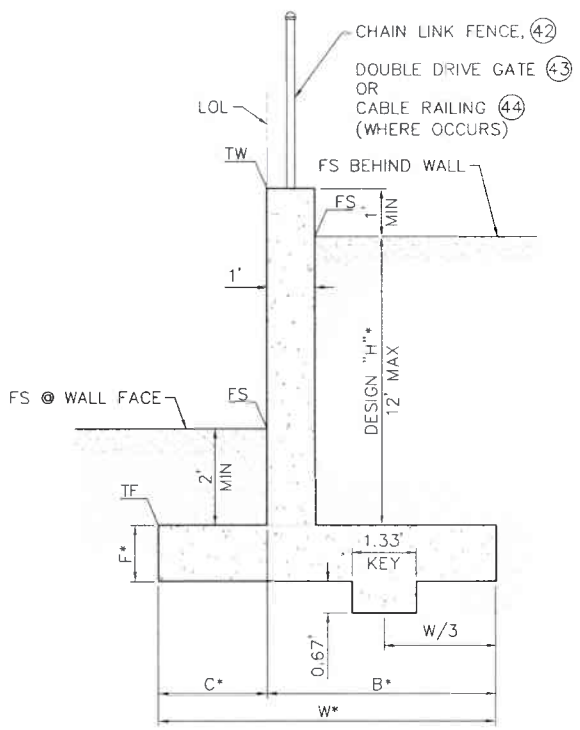

(81) WALL H TYPICAL SECTION

CALTRANS STD. PLAN D84
BOX CULVERT WINGWALL TYPE B

SCALE: 1" = 2'

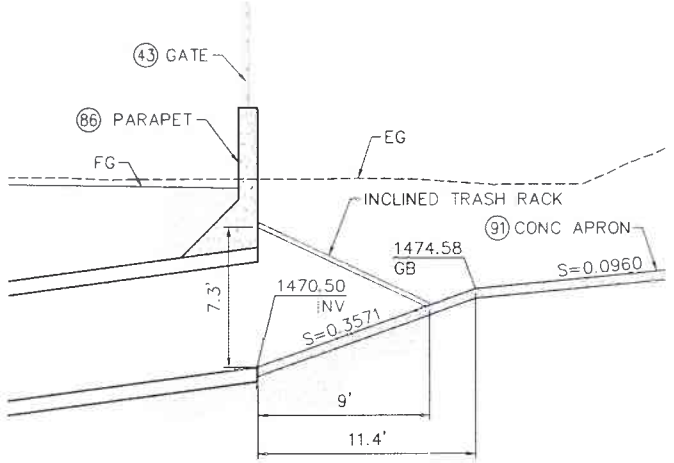

(80) INCLINED TRASH RACK DETAIL

LINE H
SCALE: 1" = 5'

WALL NOTES:

H SHOWN IS DESIGN "H" FOR USE IN DETERMINING DIMENSIONS AND REINFORCEMENT STEEL PER REFERENCED CALTRANS STD.

* W, C, B, F & STEEL REINFORCEMENT PER DESIGN "H" IN CHART ON CALTRANS STD D84.

GENERAL NOTES:

1. CONSTRUCT WALL EXPANSION JOINTS (WITH WATERSTOPS), WEAKENED PLANES, WEEP HOLES AND PERVIOUS BACKFILL IN ACCORDANCE WITH CALTRANS STANDARD PLAN B0-3.
2. AT BEGIN AND END WALL, PROVIDE 1" EXPANSION JOINT FILLER MATERIAL BETWEEN WALL AND ANY ADJOINING PORTION OF AN ADJACENT STRUCTURE PER DETAIL "X" HEREON.

RETAINING WALL CONSTRUCTION NOTES

(42) INSTALL 6' HIGH CHAIN LINK FENCE PER RCFC&WCD STD. M801
(43) INSTALL DOUBLE DRIVE GATE PER RCFC&WCD STD. M801, W PER PLAN
(44) INSTALL CABLE RAILING PER CALTRANS STD. B11-47
(71) CONSTRUCT 4' CUTOFF WALL WITH SLAB TIE-IN PER DETAIL ON SHEET 51
(73) CONSTRUCT RETAINING WALL TYPE "6A" (CASE1) PER CALTRANS STD. B3-7A
(77) CONSTRUCT 6" CONCRETE ACCESS ROAD WITH #4@12" O.C. EACH WAY 2" CLEAR ON TOP
(80) INSTALL INCLINED TRASH RACK PER SPPWC STD. PLAN 361-2, WITH 2 - 3' WIDE REMOVEABLE SECTIONS (L=10')
(81) CONSTRUCT BOX CULVERT WINGWALL TYPE "A" PER CALTRANS STD. D84
(86) CONSTRUCT PARAPET WALL PER DETAILS ON SHEET 51
(91) CONSTRUCT 6" CONCRETE APRON WITH #4@12" O.C. EACH WAY 2" CLEAR ON TOP

* CONSTRUCTION DRAWING SET DATED 22 JUNE, 2021

K&A Engineering, Inc.
ENGINEERING
LAND PLANNING
SURVEYING
357 N. SHERIDAN STREET
SUITE 117
CORONA, CALIFORNIA 92880
TEL (951) 279-1800
FAX (951) 279-4380
REGISTERED PROFESSIONAL ENGINEER DONALD R. BERGH No 28949 CIVIL STATE OF CALIFORNIA
Donald Bergh 8/16/2021
ENGINEER R.C.E. 28949 DATE

COUNTY FILE No. 970-B

COUNTY OF RIVERSIDE
TRANSPORTATION DEPARTMENT
RECMD COUNTY OVERSIGHT ENGINEER 8/11/21
APPROVES AS TO COMPLIANCE WITH APPLICABLE COUNTY STANDARDS AND PRACTICES
REGISTRATION # 76450 DATE SIGNED

Don't Dig Until You Call U.S.A. Toll Free
DIAL 811
for the location of buried utility lines.
Don't disrupt vital services.
BURIED CABLE
TWO WORKING DAYS BEFORE YOU DIG

BENCH MARK
NAD83 Epoch 2011, CCS83, ZONE 6-NAVD88(CGH88)
RCFC B.M. Z 15502
SET MAG NAIL W/ RCFC WCD TAG FLUSH
E 6,226,565.52 N 2,177,350.50
ELEV.: 1,401.46 SURVEY DATE: 02/2013

REF	DESCRIPTION	APPR	DATE
	REVISIONS		

RIVERSIDE COUNTY FLOOD CONTROL AND WATER CONSERVATION DISTRICT
DESIGNED BY: K&A ENGINEERING
DRAWN BY: ADA
DATE DRAWN: JUNE 2021
PB NUMBER: 220076
RECOMMENDED FOR APPROVAL BY: DATE 7-27-2021
APPROVED BY: DATE 8/4/2021

LAKELAND VILLAGE MDP
STORM DRAIN
LINE H INLET STRUCTURE
STRUCTURE DETAILS

PROJECT NO. 3-0-00020
DRAWING NO. 3-0207
SHEET NO. 44 OF 65

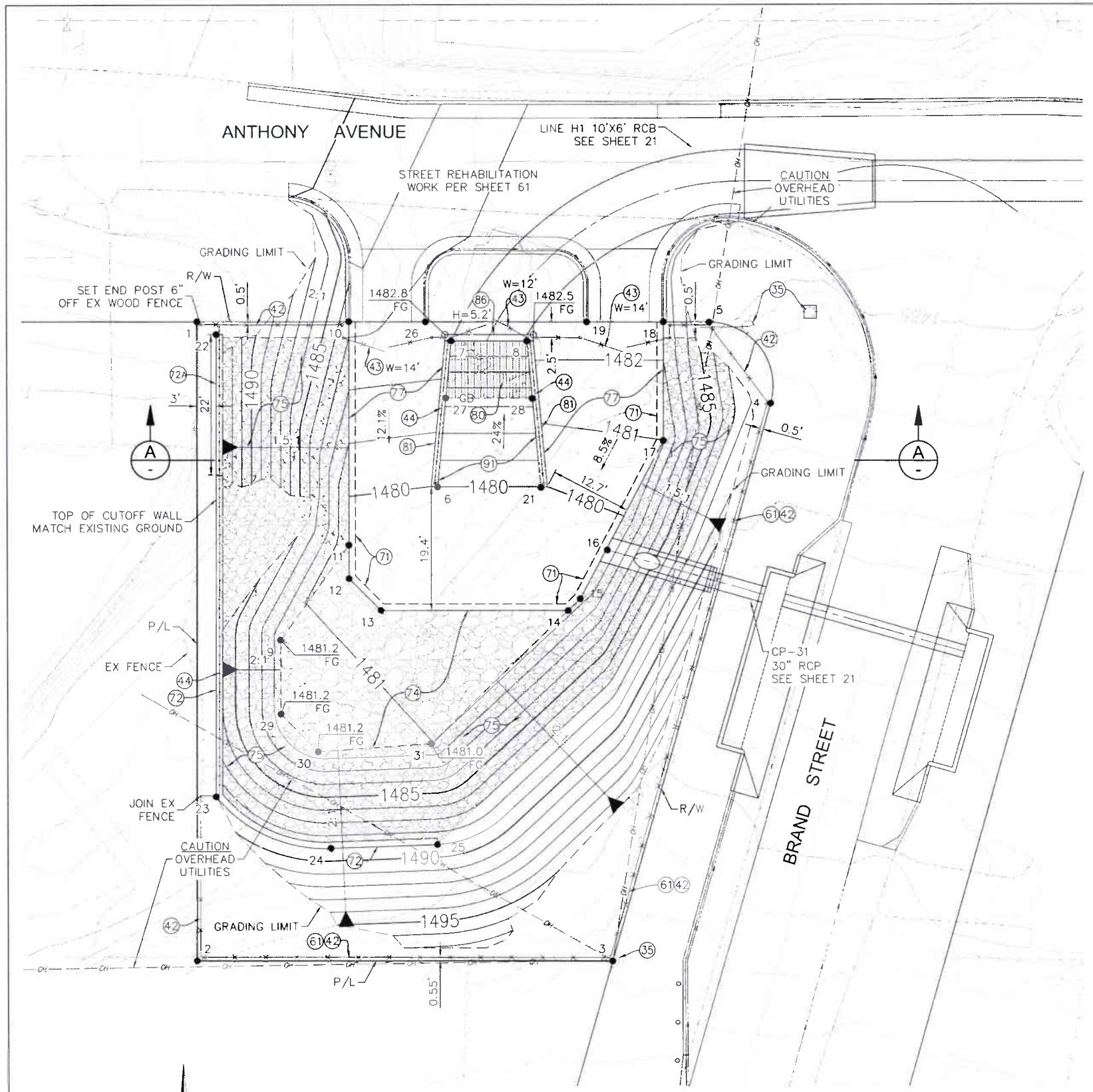

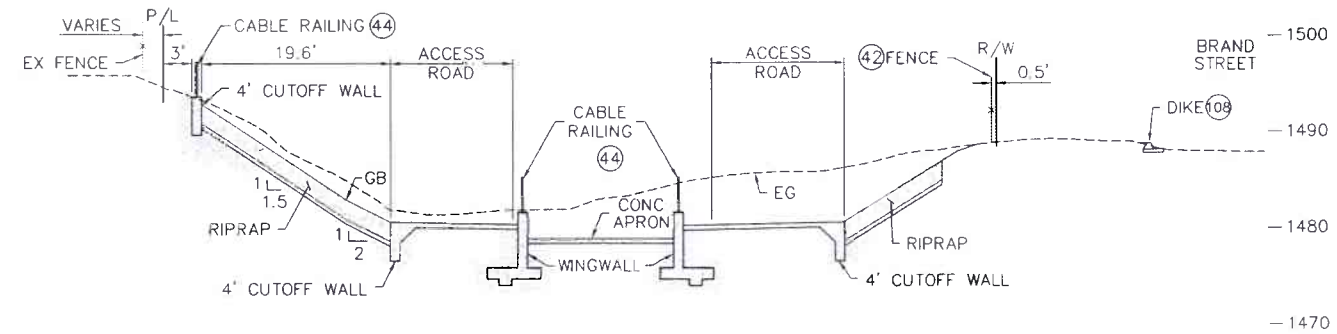

A SECTION
SCALE: 1"=10'

SEE ADDITIONAL SECTIONS ON SHEET 50

INLET AND OULET STRUCTURES CONSTRUCTION NOTES

(35) PROTECT IN PLACE

(42) INSTALL 6' HIGH CHAIN LINK FENCE PER RCFC&WCD STD. M801

(43) INSTALL DOUBLE DRIVE GATE PER RCFC&WCD STD. M801, W PER PLAN

(44) INSTALL CABLE RAILING PER CALTRANS STD. B11-47

(61) REMOVE & LEGALLY DISPOSE OF INTERFERING PORTIONS OF EXISTING FENCE

(71) CONSTRUCT 4' CUTOFF WALL WITH SLAB TIE-IN PER DETAIL ON SHEET 51

(72) CONSTRUCT 6' CUTOFF WALL PER DETAIL SHEET 51

(72A) CONSTRUCT 4' CUTOFF WALL PER DETAIL ON SHEET 51

(74) PLACE 36" THICK CLASS V (1/4 TON) ROCK SLOPE PROTECTION OVER 6" FILTER MATERIAL OVER FILTER FABRIC PER DETAIL ON SHEET 51

(75) PLACE 24" THICK CONCRETED CLASS III (150LBS) ROCK SLOPE PROTECTION OVER 6" FILTER MATERIAL OVER FILTER FABRIC PER DETAIL ON SHEET 51

(77) CONSTRUCT 6" CONCRETE ACCESS ROAD WITH #4@12" O.C. EACH WAY 2" CLEAR ON TOP

(80) INSTALL INCLINED TRASH RACK PER SPPWC STD. PLAN 361-2, WITH 2 - 3' WIDE REMOVEABLE SECTIONS (L=10')

(81) CONSTRUCT BOX CULVERT WINGWALL TYPE "A" PER CALTRANS STD. D84 AND DETAILS ON SHEET 47

(86) CONSTRUCT PARAPET WALL PER DETAILS ON SHEET 51

(91) CONSTRUCT 6" CONCRETE APRON WITH #4@12" O.C. EACH WAY 2" CLEAR ON TOP

(108) CONSTRUCT 8" AC DIKE PER RCTD STD. NO. 212

CONSTRUCTION DRAWING SET DATED 22 JUNE, 2021

N

10' 0' 10'
SCALE 1"=10'

LINE H1 INLET

COUNTY FILE No. 970-B

K&A Engineering, Inc.
ENGINEERING
LAND PLANNING
SURVEYING
357 N. SHERIDAN STREET
SUITE 117
CORONA, CALIFORNIA 92880
TEL. (951) 279-1800
FAX (951) 279-4380

REGISTERED PROFESSIONAL ENGINEER
DONALD P. BERG
No. 26949
CIVIL
STATE OF CALIFORNIA

Donald Berg 8/16/2021
ENGINEER R.C.E. 26949 DATE

COUNTY OF RIVERSIDE
TRANSPORTATION DEPARTMENT
RECMD COUNTY OVERSIGHT ENGINEER 8/11/21
APPROVES AS TO COMPLIANCE WITH APPLICABLE COUNTY STANDARDS AND PRACTICES
REGISTRATION # 76450 DATE SIGNED

Don't Dig...Until You Call U.S.A. Toll Free
DIAL 811
for the location of buried utility lines.
Don't disrupt vital services.
BURIED CABLE
TWO WORKING DAYS BEFORE YOU DIG

BENCH MARK
NAD83 Epoch 2011, CCS83, ZONE 6 - NAVD88(CON88)
RCFC B.M. Z 15502
SET MAG NAIL W/ RCFC WCD TAG FLUSH
E 6,226,565.52 N 2,177,350.50
ELEV: 1,401.45 SURVEY DATE: 02/2013

REF	DESCRIPTION	APPR	DATE
	REVISIONS		

RIVERSIDE COUNTY FLOOD CONTROL AND WATER CONSERVATION DISTRICT
DESIGNED BY: K&A ENGINEERING
DRAWN BY: ADA
DATE DRAWN: JUNE 2021
PB NUMBER: 226078
RECOMMENDED FOR APPROVAL BY: DATE 7-27-2021
APPROVED BY: DATE 8/4/2021

LAKELAND VILLAGE MDP
STORM DRAIN
LINE H1
INLET GRADING & CONTROL

PROJECT NO. 3-0-00020
DRAWING NO. 3-0207
SHEET NO. 45 OF 65

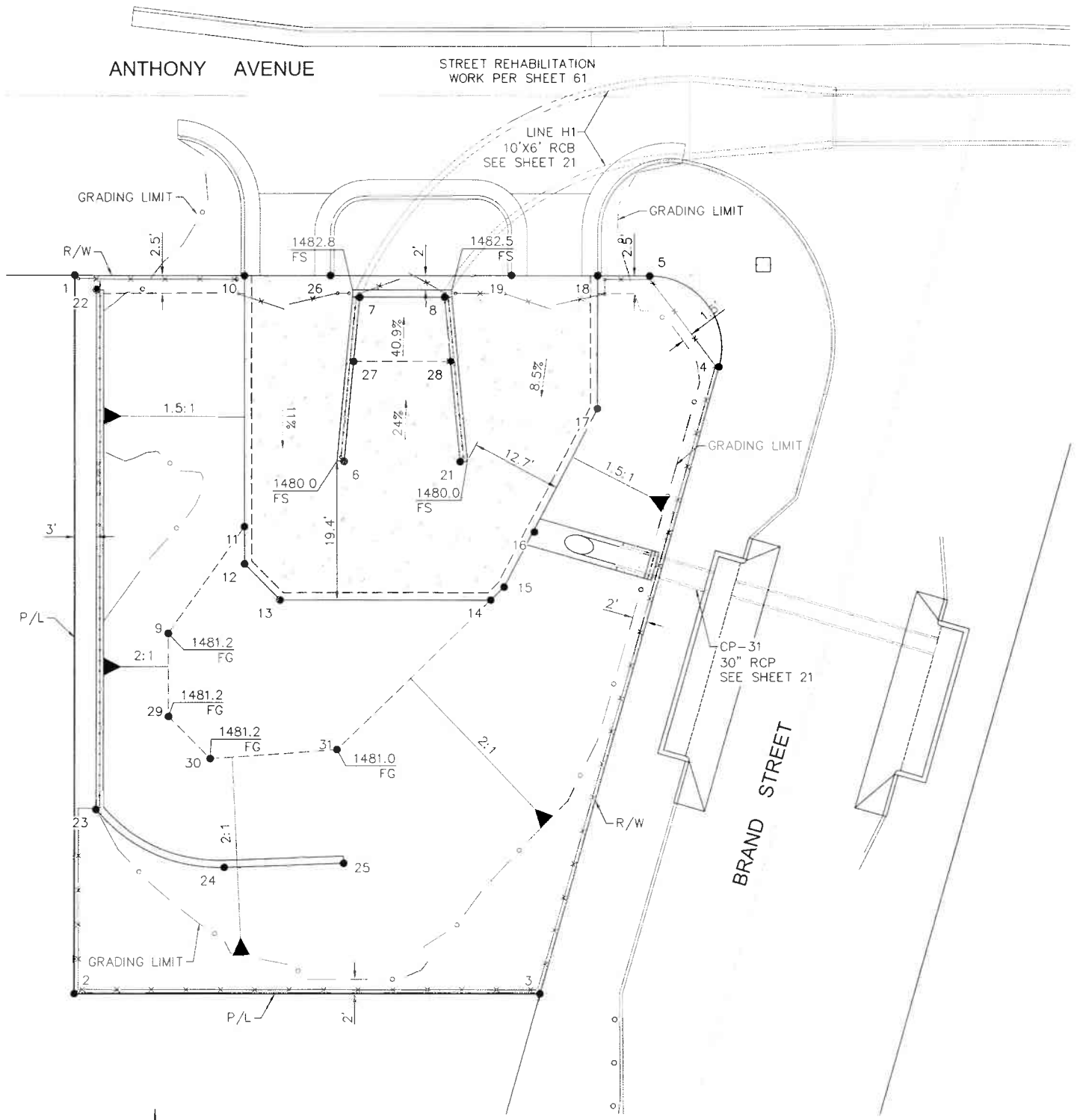

LINE H1 INLET

PROJECT LIMITS		
PT.	NORTHING	EASTING
1	2176592.69	6225945.98
2	2176492.69	6225945.76
3	2176492.57	6226010.62
4	2176579.78	6226035.57
5	2176592.53	6226025.98

INLET STRUCTURE SURVEY CONTROL				
PT.	NORTHING	EASTING	EL.	DESCRIPTION
6	2176566.72	6225983.42	1481.0	TW
7	2176589.61	6225985.64	1485.0	TW
8	2176589.59	6225997.42	1485.0	TW
9	2176542.82	6225958.87	1481.2	FG
10	2176592.64	6225969.58	1483.6	FL
11	2176557.69	6225969.51	1480.1	FS
12	2176552.44	6225969.50	1480.3	FS
13	2176547.43	6225974.49	1480.5	FS
14	2176547.38	6226003.75	1480.5	FS
15	2176549.22	6226005.64	1480.5	FS
16	2176556.86	6226009.90	1480.4	FS
17	2176574.00	6226018.72	1481.0	FS
18	2176592.55	6226018.76	1482.1	FL
19	2176592.57	6226006.76	1482.1	FL
21	2176566.69	6225999.55	1481.0	TW
22	2176590.68	6225948.98	1492.4	TW
23	2176518.31	6225948.82	1489.0	TW
24	2176510.25	6225966.60	1489.0	TW
25	2176510.82	6225983.28	1489.0	TW
26	2176592.62	6225981.58	1482.7	FL
27	2176580.61	6225984.77	1476.7	GB
28	2176580.58	6225998.26	1476.7	GB
29	2176531.25	6225958.90	1481.2	FG
30	2176525.33	6225964.65	1481.2	FG
31	2176526.57	6225982.35	1481.0	FG

CONSTRUCTION DRAWING SET DATED 22 JUNE, 2021

K&A Engineering, Inc.
ENGINEERING
LAND PLANNING
SURVEYING
357 N. SHERIDAN STREET
SUITE 117
CORONA, CALIFORNIA 92880
TEL. (951) 279-1800
FAX (951) 279-4380

REGISTERED PROFESSIONAL ENGINEER DONALD W. BERGH No. 28949 C.V.L. STATE OF CALIFORNIA

Donald Bergh 8/16/2021
ENGINEER R.C.E. 28949 DATE

COUNTY FILE No. 970-B

COUNTY OF RIVERSIDE
TRANSPORTATION DEPARTMENT

RECMD COUNTY OVERSIGHT ENGINEER 8/11/21
APPROVES AS TO COMPLIANCE WITH APPLICABLE COUNTY STANDARDS AND PRACTICES
REGISTRATION # 76450 DATE SIGNED

Don't Dig...Until You Call U.S.A. Toll Free
DIAL 811
for the location of buried utility lines.
Don't disrupt vital services.
TWO WORKING DAYS BEFORE YOU DIG

BENCH MARK
NAD83 Epoch 2011, CCS83, ZONE 6-
NAVD88(CCH88)
RCFC B.M. Z 15502
SET MAG NAIL W/ RCFC WCD TAG FLUSH
E 6,226,565.52 N 2,177,359.50
ELEV: 1,401.46 SURVEY DATE: 02/2013

REF.	DESCRIPTION	APPR.	DATE

REVISIONS

RIVERSIDE COUNTY FLOOD CONTROL AND WATER CONSERVATION DISTRICT

DESIGNED BY: K&A ENGINEERING
DRAWN BY: ADA
DATE DRAWN: JUNE 2021
B NUMBER: 226078
RECOMMENDED FOR APPROVAL BY: DATE 7-27-2021
APPROVED BY: DATE 8/4/2021

LAKELAND VILLAGE MDP
STORM DRAIN
LINE H1 INLET STRUCTURE
SURVEY CONTROL

PROJECT NO. 3-0-00020
DRAWING NO. 3-0207
SHEET NO. 46 OF 65

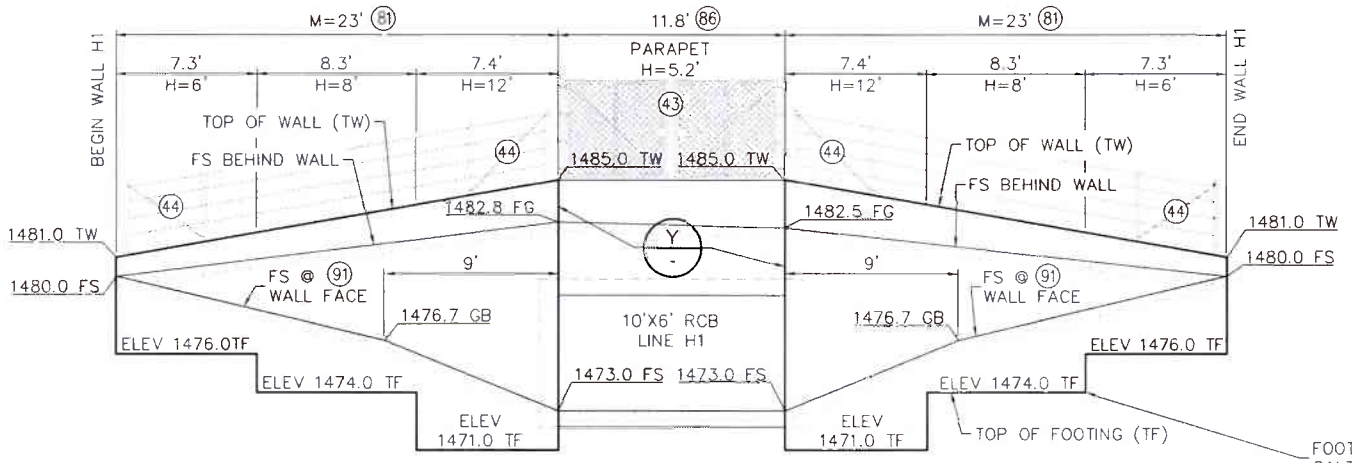

WALL H1 ELEVATION

SCALE: 1" = 5'

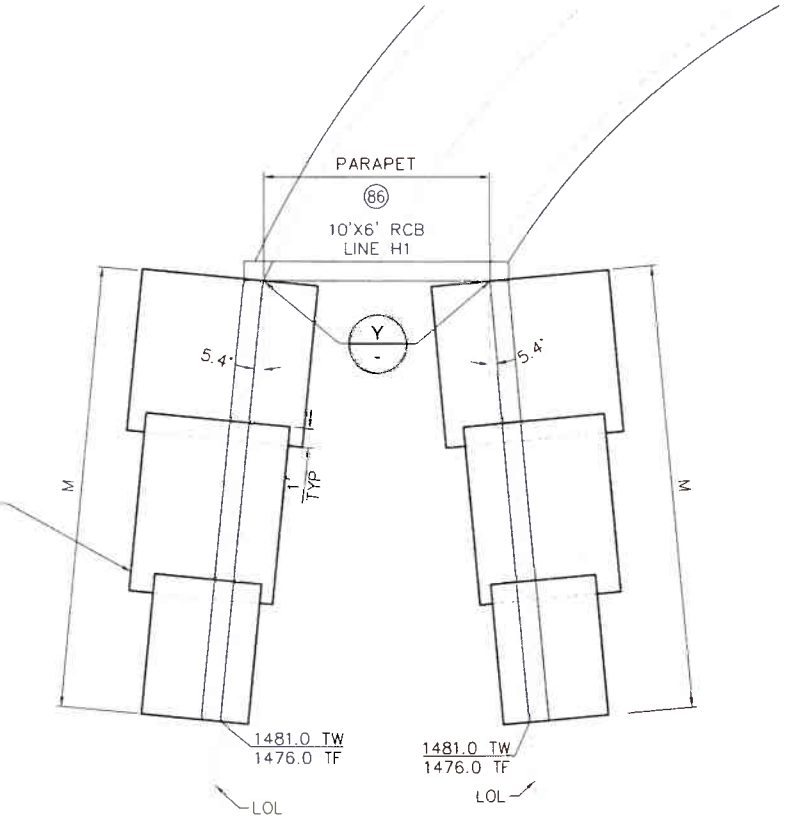

WALL H1 FOOTING PLAN

SCALE: 1" = 5'

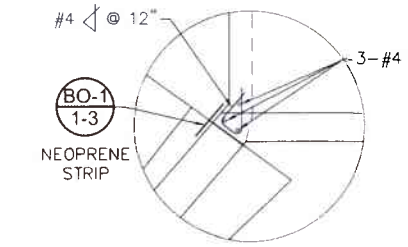

DETAIL

CALTRANS STD. D84

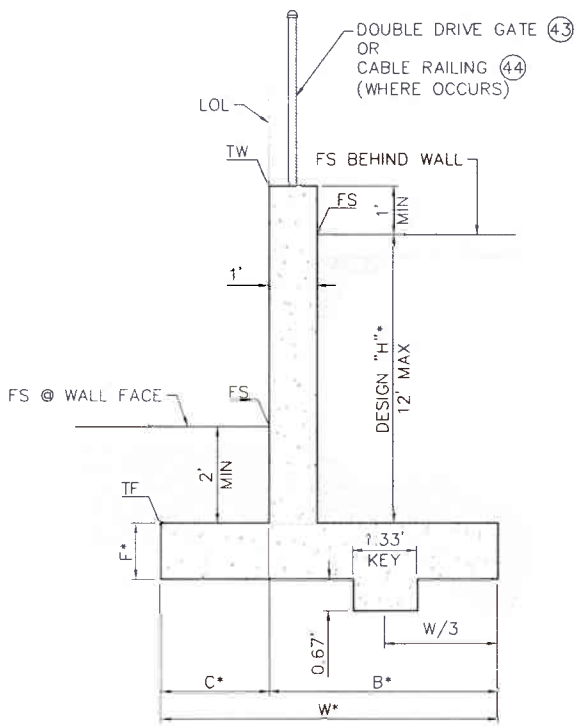

(81) WALL H1 TYPICAL SECTION

CALTRANS STD. PLAN D84
BOX CULVERT WINGWALL TYPE B

SCALE: 1" = 2'

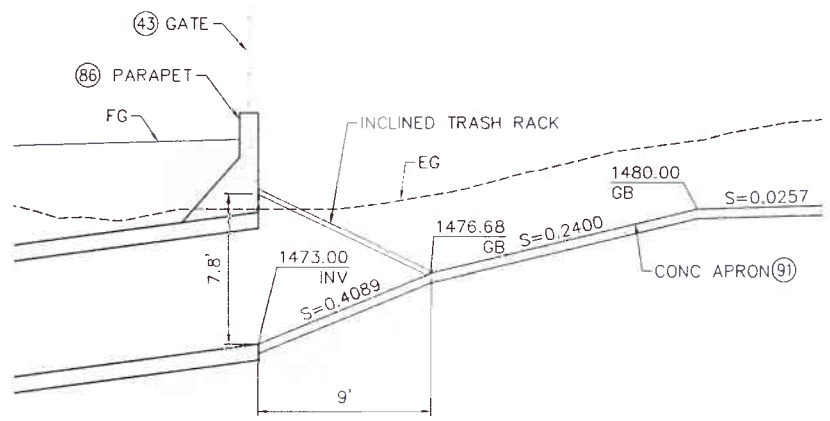

(80) INCLINED TRASH RACK DETAIL

LINE H1

SCALE: 1" = 5'

WALL NOTES:

H SHOWN IS DESIGN "H" FOR USE IN DETERMINING DIMENSIONS AND REINFORCEMENT STEEL PER REFERENCED CALTRANS STD.

* W, C, B, F & STEEL REINFORCEMENT PER DESIGN "H" IN CHART ON CALTRANS STD D84.

GENERAL NOTES:

1. CONSTRUCT WALL EXPANSION JOINTS (WITH WATERSTOPS), WEAKENED PLANES, WEEP HOLES AND PERVIOUS BACKFILL IN ACCORDANCE WITH CALTRANS STANDARD PLAN B0-3.
2. AT BEGIN AND END WALL, PROVIDE 1" EXPANSION JOINT FILLER MATERIAL BETWEEN WALL AND ANY ADJOINING PORTION OF AN ADJACENT STRUCTURE PER DETAIL "Y" HEREON.

RETAINING WALL CONSTRUCTION NOTES

(43) INSTALL DOUBLE DRIVE GATE PER RCFC&WCD STD. M801, W PER PLAN

(44) INSTALL CABLE RAILING PER CALTRANS STD. B11-47

(80) INSTALL INCLINED TRASH RACK PER SPPWC STD. PLAN 361-2, WITH 2 - 3' WIDE REMOVEABLE SECTIONS (L=10')

(81) CONSTRUCT BOX CULVERT WINGWALL TYPE "A" PER CALTRANS STD. D84

(86) CONSTRUCT PARAPET WALL PER DETAILS ON SHEET 51

(91) CONSTRUCT 6" CONCRETE APRON WITH #4@12" O.C. EACH WAY 2" CLEAR ON TOP

' CONSTRUCTION DRAWING SET DATED 22 JUNE, 2021

K&A Engineering, Inc.
ENGINEERING LAND PLANNING SURVEYING
357 N. SHERIDAN STREET SUITE 117
CORONA, CALIFORNIA 92880
TEL (951) 279-1800
FAX (951) 279-4380
Donald Bergh 8/16/2021
ENGINEER R.C.E. 28949 DATE
REGISTERED PROFESSIONAL ENGINEER DONALD W. BERGH No. 28949 STATE OF CALIFORNIA

COUNTY FILE No. 970-B

COUNTY OF RIVERSIDE TRANSPORTATION DEPARTMENT
RECMD COUNTY OVERSIGHT ENGINEER 8/11/21
APPROVES AS TO COMPLIANCE WITH APPLICABLE COUNTY STANDARDS AND PRACTICES
REGISTRATION # 76450 DATE SIGNED

Don't Dig...Until You Call U.S.A. Toll Free DIAL 811 for the location of buried utility lines. Don't disrupt vital services.
TWO WORKING DAYS BEFORE YOU DIG

BENCH MARK
NAD83 Epoch 2011, CCS83, ZONE 6-NAVD88(CCH88)
RCFC B.M. Z-15502
SET MAG NAIL W/ RCFC WCD TAG FLUSH
E 6,226,565.52 N 2,177,350.50
ELEV: 1,401.46 SURVEY DATE: 02/2013

REF.	DESCRIPTION	APPR	DATE
	REVISIONS		

RIVERSIDE COUNTY FLOOD CONTROL AND WATER CONSERVATION DISTRICT

DESIGNED BY K&A ENGINEERING
DRAWN BY: ADA
DATE DRAWN: JUNE 2021
P6 NUMBER: 226078

RECOMMENDED FOR APPROVAL BY: DATE 7-27-2021
APPROVED BY: DATE 8/4/2021

LAKELAND VILLAGE MDP
STORM DRAIN
LINE H1 INLET STRUCTURE
STRUCTURE DETAILS

PROJECT NO 3-0-00020
DRAWING NO 3-0207
SHEET NO. 47 OF 65

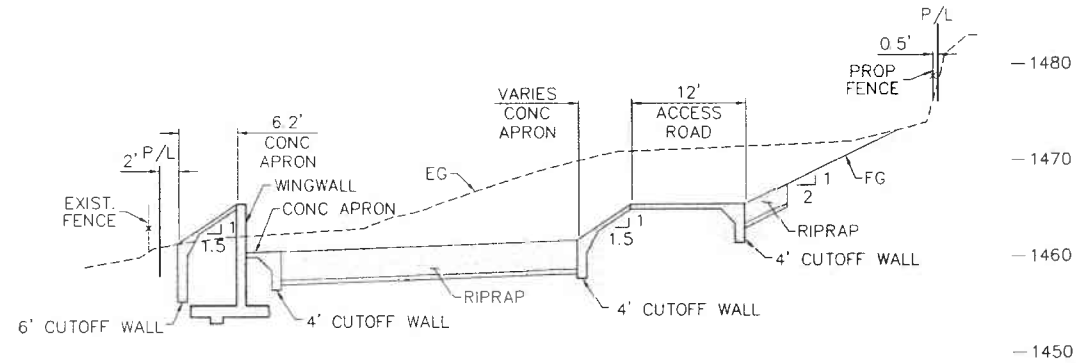

A SECTION
SCALE: 1"=10'

SEE ADDITIONAL SECTIONS ON SHEET 50

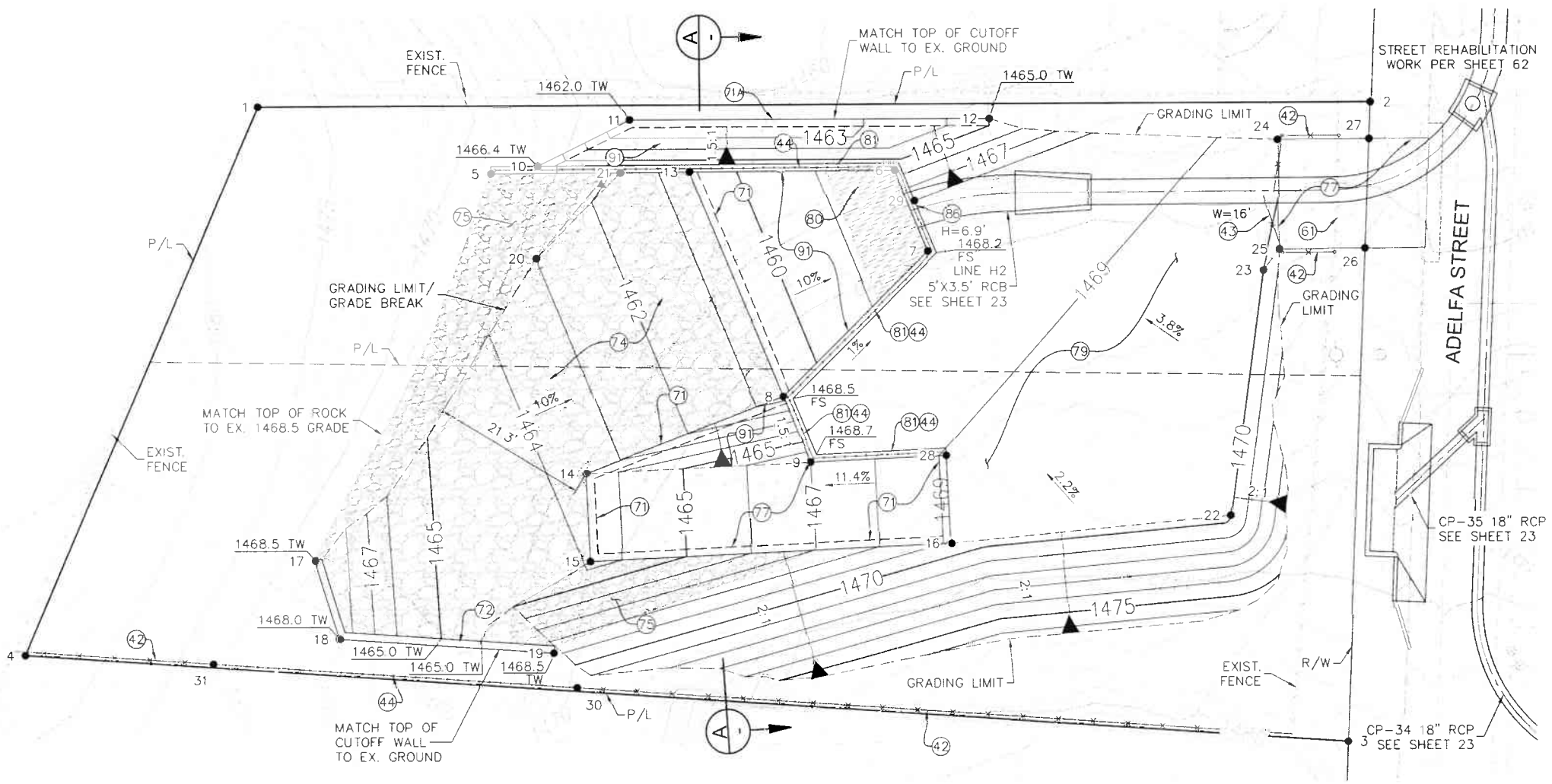

INLET AND OULET STRUCTURES CONSTRUCTION NOTES

(42) INSTALL 6' HIGH CHAIN LINK FENCE PER RCFC&WCD STD. M801

(43) INSTALL DOUBLE DRIVE GATE PER RCFC&WCD STD. M801, W PER PLAN

(44) INSTALL CABLE RAILING PER CALTRANS STD. B11-47

(61) REMOVE & LEGALLY DISPOSE OF INTERFERING PORTIONS OF EXISTING FENCE

(71) CONSTRUCT 4' CUTOFF WALL WITH SLAB TIE-IN PER DETAIL ON SHEET 51

(71A) CONSTRUCT 6' CUTOFF WALL WITH SLAB TIE-IN PER DETAIL ON SHEET 51

(72) CONSTRUCT 6' CUTOFF WALL PER DETAIL ON SHEET 51

(74) PLACE 36" THICK CLASS V (1/4 TON) ROCK SLOPE PROTECTION OVER 6" FILTER MATERIAL OVER FILTER FABRIC PER DETAIL ON SHEET 51

(75) PLACE 24" THICK CONCRETED CLASS III (150LBS) ROCK SLOPE PROTECTION OVER 6" FILTER MATERIAL OVER FILTER FABRIC PER DETAIL ON SHEET 51

(77) CONSTRUCT 6" CONCRETE ACCESS ROAD WITH #4@12" O.C. EACH WAY 2" CLEAR ON TOP

(79) GRADE LOADING AREA AS SHOWN WITHIN GRADING LIMITS OR AS DIRECTED BY ENGINEER. PLACE 3" CRUSHED ROCK OVER COMPACTED NATIVE

(80) INSTALL INCLINED TRASH RACK PER SPPWC STD. PLAN 361-2, WITH 2 - 3' WIDE REMOVEABLE SECTIONS (L=10')

(81) CONSTRUCT BOX CULVERT WINGWALL TYPE "A" PER CALTRANS STD. D84 AND DETAILS ON SHEET 50

(86) CONSTRUCT PARAPET WALL PER DETAILS ON SHEET 51

(91) CONSTRUCT 6" CONCRETE APRON WITH #4@12" O.C. EACH WAY 2" CLEAR ON TOP

CONSTRUCTION DRAWING SET DATED 22 JUNE, 2021

N

10' 0' 10'
SCALE 1"=10'

LINE H2 INLET

K&A ENGINEERING LAND PLANNING SURVEYING
Engineering, Inc.
357 N. SHERIDAN STREET
SUITE 117
CORONA, CALIFORNIA 92880
TEL. (951) 279-1600
FAX (951) 279-4380

REGISTERED PROFESSIONAL ENGINEER DONALD P. BERGH No. 28949 CIVIL STATE OF CALIFORNIA

Donald Bergh 8/16/2021
ENGINEER R.C.E. 28949 DATE

COUNTY FILE No. 970-B

COUNTY OF RIVERSIDE
TRANSPORTATION DEPARTMENT

RECMD COUNTY OVERSIGHT ENGINEER 8/11/21
APPROVES AS TO COMPLIANCE WITH APPLICABLE COUNTY STANDARDS AND PRACTICES
REGISTRATION # 76450 DATE SIGNED

Don't Dig..Until You Call U.S.A. Toll Free
DIAL 811
for the location of buried utility lines.
Don't disrupt vital services.
TWO WORKING DAYS BEFORE YOU DIG

BENCH MARK
NAD83 Epoch 2011, CCS83, ZONE 6-
NAVD88(COH88)
RCFC B.M. Z 15502
SET MAG NAIL W/ RCFC WCD TAG FLUSH
E 6,226,565.52 N 2,777,350.50
ELEV: 1,401.46 SURVEY DATE: 02/2013

REF	DESCRIPTION	APPR	DATE
	REVISIONS		

RIVERSIDE COUNTY FLOOD CONTROL AND WATER CONSERVATION DISTRICT
DESIGNED BY: K&A ENGINEERING
DRAWN BY: ADA
DATE DRAWN: JUNE 2021
PB NUMBER: 226073
RECOMMENDED FOR APPROVAL BY: DATE 7-27-2021
APPROVED BY: DATE 8/4/2021

LAKELAND VILLAGE MDP

STORM DRAIN
LINE H2
GRADING & CONTROL

PROJECT NO. 3-0-00020
DRAWING NO. 3-0207
SHEET NO. 48 OF 65

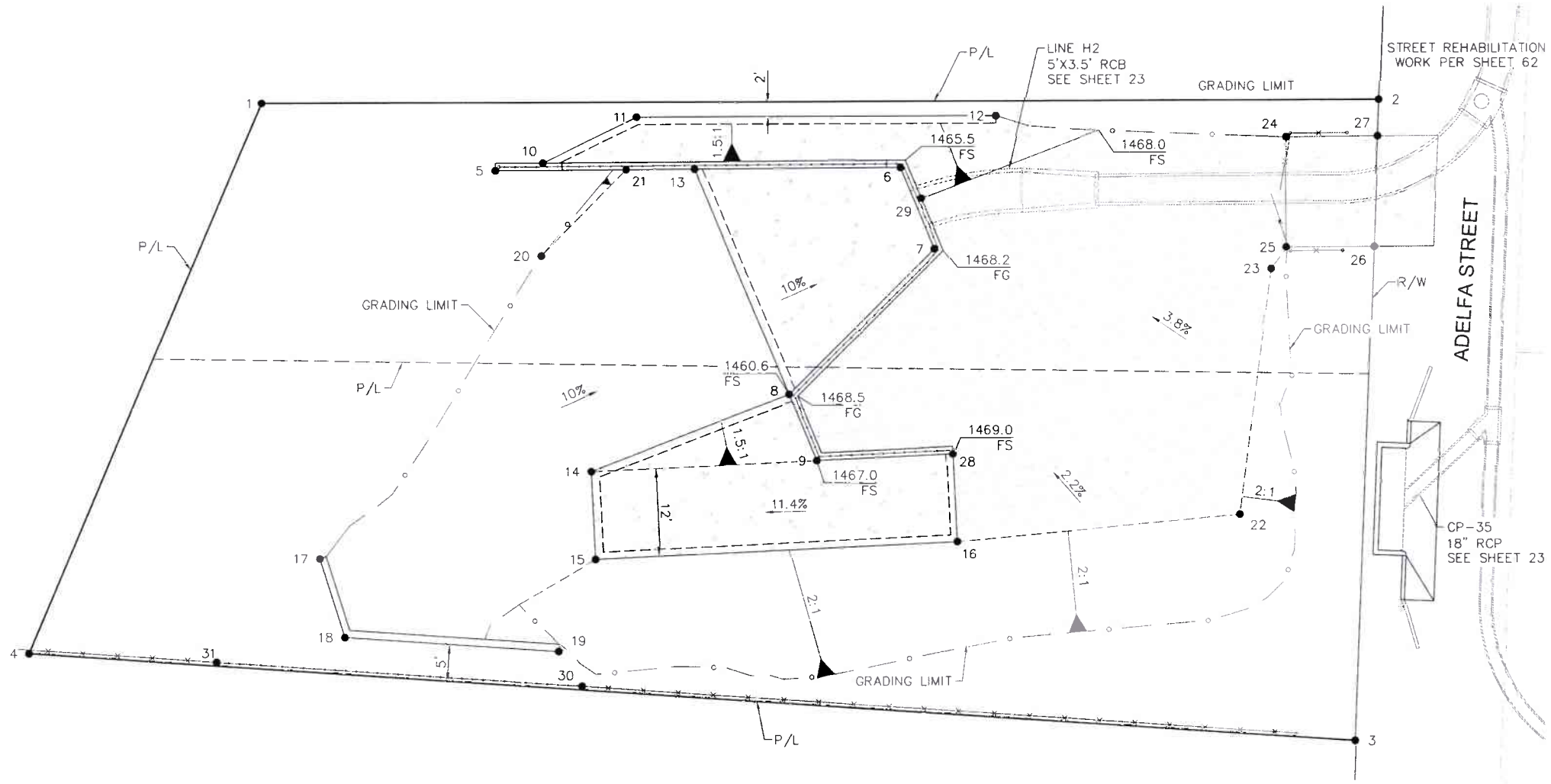

PROJECT LIMITS		
PT.	NORTHING	EASTING
1	2176902.07	6225605.44
2	2176902.53	6225758.04
3	2176815.15	6225754.66
4	2176827.08	6225573.54

INLET STRUCTURE SURVEY CONTROL				
PT.	NORTHING	EASTING	EL.	DESCRIPTION
5	2176892.88	6225637.28	1468.5	TW
6	2176893.28	6225692.69	1466.8	TW
7	2176882.21	6225697.32	1469.0	TW
8	2176862.36	6225677.44	1469.0	TW
9	2176853.36	6225681.19	1469.3	TW
10	2176893.93	6225643.73	1466.4	TW
11	2176900.22	6225656.54	1462.0	TW
12	2176900.37	6225705.62	1465.0	TW
13	2176893.08	6225664.60	1460.6	FS
14	2176851.85	6225650.40	1463.5	TW
15	2176839.87	6225650.98	1463.5	TW
16	2176842.29	6225700.37	1469.0	TW
17	2176839.98	6225613.22	1468.5	TW
18	2176829.25	6225616.62	1468.0	TW
19	2176827.32	6225645.95	1468.5	TW
20	2176881.28	6225643.52	1463.0	TOE
21	2176893.01	6225655.12	1461.5	TOE
22	2176846.05	6225738.79	1470.0	TOE
23	2176879.53	6225743.18	1470.0	TOE
24	2176897.41	6225745.28	1469.3	FS
25	2176882.41	6225745.40	1470.7	TOE
26	2176882.51	6225757.27	1470.8	FS
27	2176897.51	6225757.85	1469.0	FS
28	2176854.28	6225699.79	1470.0	TW
29	2176889.09	6225695.53	1468.0	FS
30	2176822.60	6225649.14	1470.4	CABLE RAILING
31	2176825.89	6225599.25	1470.9	CABLE RAILING

N

10' 0' 10'
SCALE 1"=10'

LINE H2 INLET

CONSTRUCTION DRAWING SET DATED 22 JUNE, 2021

K&A Engineering, Inc.
ENGINEERING
LAND PLANNING
SURVEYING
357 N. SHERIDAN STREET
SUITE 117
CORONA, CALIFORNIA 92880
TEL (951) 279-1800
FAX (951) 279-4380

REGISTERED PROFESSIONAL ENGINEER DONALD W. BERGH No. 28949 CIVIL STATE OF CALIFORNIA

Donald Bergh 8/16/2021
ENGINEER R.C.E. 28949 DATE

COUNTY FILE No. 970-B

COUNTY OF RIVERSIDE
TRANSPORTATION DEPARTMENT

REC'MD COUNTY OVERSIGHT ENGINEER 8/11/21
APPROVES AS TO COMPLIANCE WITH APPLICABLE COUNTY STANDARDS AND PRACTICES
REGISTRATION # 76450 DATE SIGNED

Don't Dig...Until You Call U.S.A. Toll Free
DIAL 811
for the location of buried utility lines.
Don't disrupt vital services.
TWO WORKING DAYS BEFORE YOU DIG

BENCH MARK
NAD83 Epoch 2011, CCS83, ZONE 6-
NAVD88(COH88)
RCFC B.M. Z 15502
SET MAG NAIL W/ RCFC WCD TAG FLUSH
E 6,226,565.52 N 2,177,350.50
ELEV: 1,401.46 SURVEY DATE: 02/2013

REF	REVISIONS	APPR	DATE
	DESCRIPTION		

RIVERSIDE COUNTY FLOOD CONTROL AND WATER CONSERVATION DISTRICT

DESIGNED BY K&A ENGINEERING
DRAWN BY: ADA
DATE DRAWN: JUNE 2021
P.B. NUMBER 226078

RECOMMENDED FOR APPROVAL BY: DATE 7-27-2021
APPROVED BY: DATE 8/4/2021

LAKELAND VILLAGE MDP

STORM DRAIN
LINE H2 INLET STRUCTURE
SURVEY CONTROL

PROJECT NO. 3-0-00020
DRAWING NO. 3-0207
SHEET NO. 49 OF 65

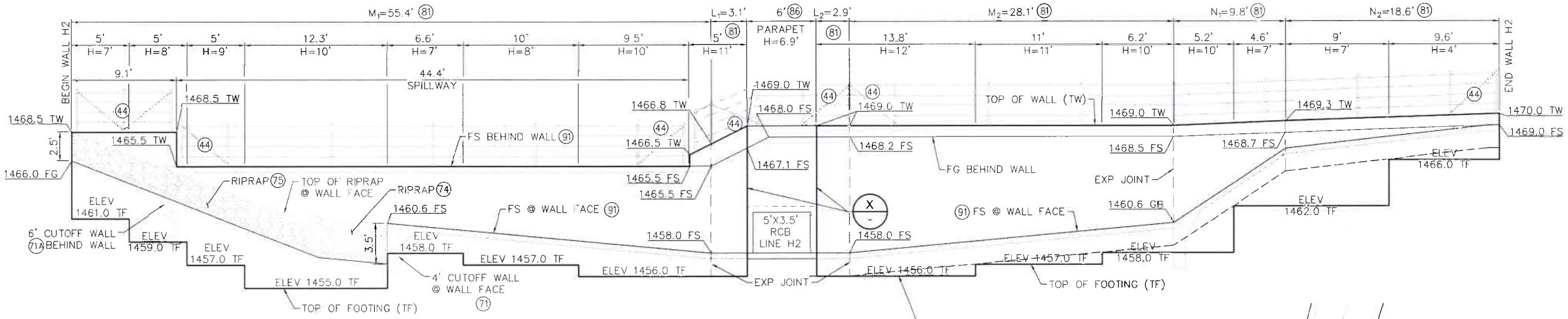

WALL H2 ELEVATION

SCALE: 1" = 5'

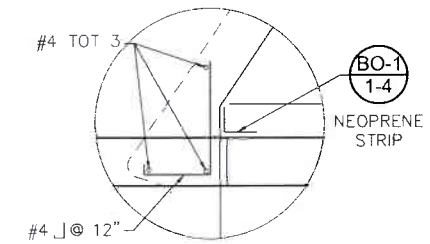

X - DETAIL

CALTRANS STD. D84

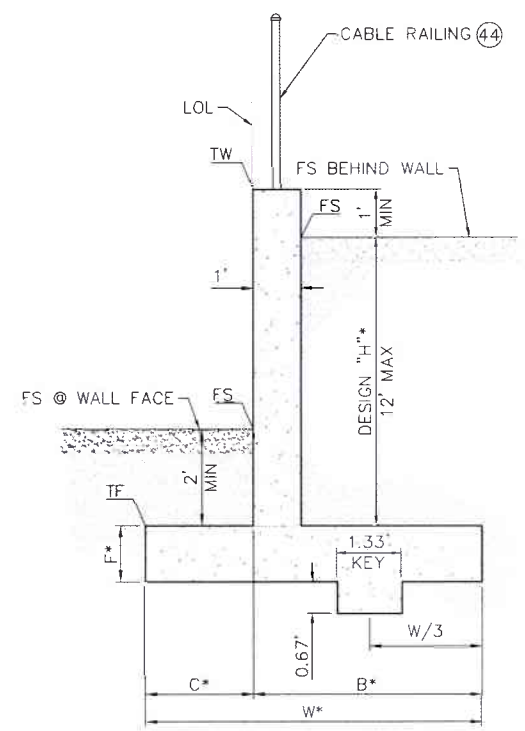

(81) WALL H2 TYPICAL SECTION

CALTRANS STD. PLAN D84
BOX CULVERT WINGWALL TYPE B

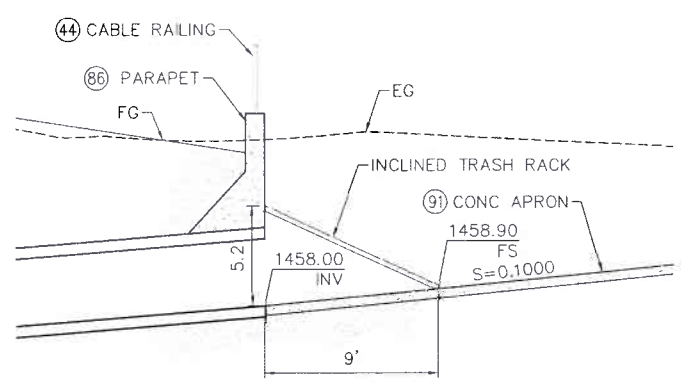

(80) INCLINED TRASH RACK DETAIL

LINE H2
SCALE: 1" = 5'

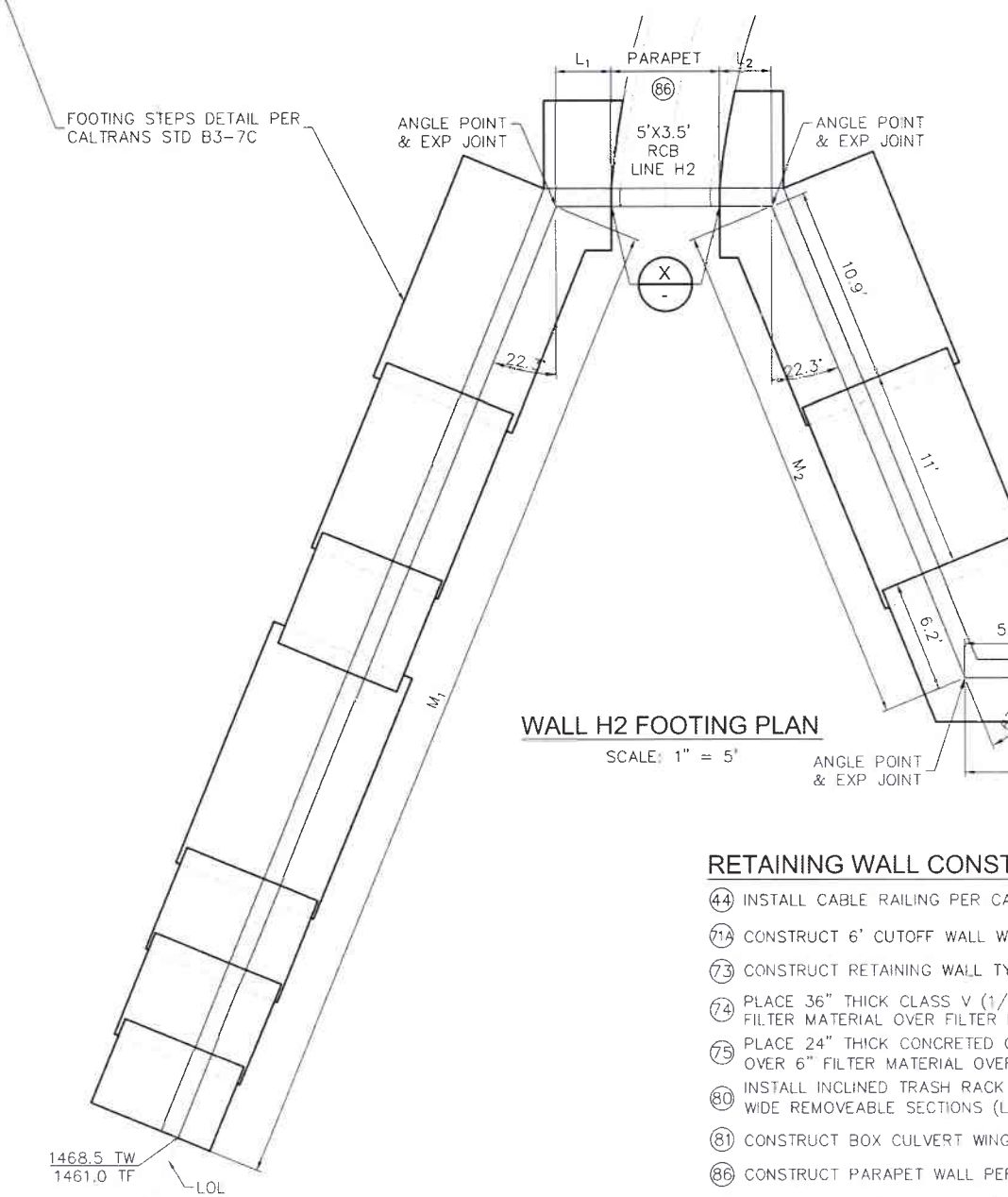

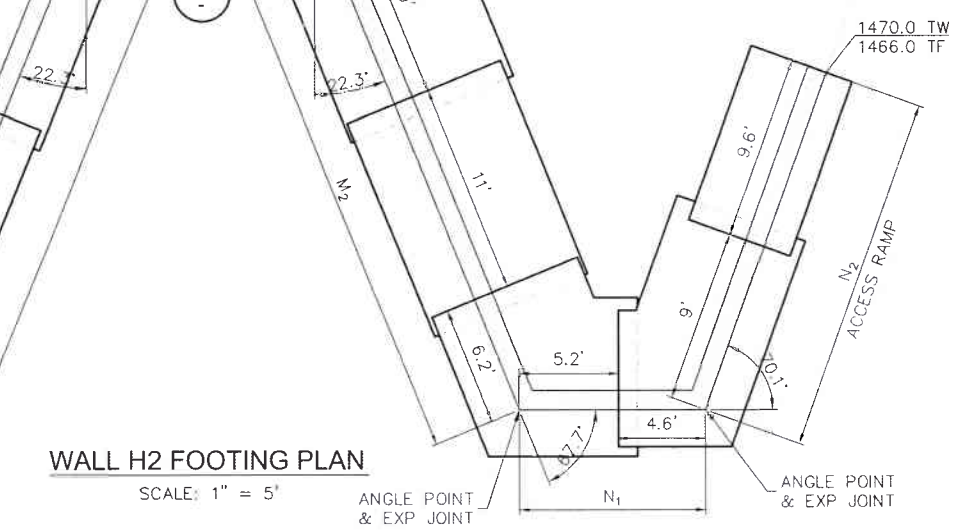

WALL H2 FOOTING PLAN

SCALE: 1" = 5'

WALL NOTES:

H SHOWN IS DESIGN "H" FOR USE IN DETERMINING DIMENSIONS AND REINFORCEMENT STEEL PER REFERENCED CALTRANS STD.

* W, C, B, F & STEEL REINFORCEMENT PER DESIGN "H" IN CHART ON CALTRANS STD D84.

GENERAL NOTES:

1. CONSTRUCT WALL EXPANSION JOINTS (WITH WATERSTOPS), WEAKENED PLANES, WEEP HOLES AND PERVIOUS BACKFILL IN ACCORDANCE WITH CALTRANS STANDARD PLAN B0-3.
2. AT BEGIN AND END WALL, PROVIDE 1" EXPANSION JOINT FILLER MATERIAL BETWEEN WALL AND ANY ADJOINING PORTION OF AN ADJACENT STRUCTURE PER DETAIL "X" HEREON.

RETAINING WALL CONSTRUCTION NOTES

(44) INSTALL CABLE RAILING PER CALTRANS STD. B11-47

(71A) CONSTRUCT 6' CUTOFF WALL WITH SLAB TIE-IN PER DETAIL ON SHEET 51

(73) CONSTRUCT RETAINING WALL TYPE "6A" (CASE1) PER CALTRANS STD. B3-7A

(74) PLACE 36" THICK CLASS V (1/4 TON) ROCK SLOPE PROTECTION OVER 6" FILTER MATERIAL OVER FILTER FABRIC PER DETAIL ON SHEET 51

(75) PLACE 24" THICK CONCRETED CLASS III (150LBS) ROCK SLOPE PROTECTION OVER 6" FILTER MATERIAL OVER FILTER FABRIC PER DETAIL ON SHEET 51

(80) INSTALL INCLINED TRASH RACK PER SPPWC STD. PLAN 361-2, WITH 2 - 3' WIDE REMOVEABLE SECTIONS (L=10')

(81) CONSTRUCT BOX CULVERT WINGWALL TYPE "A" PER CALTRANS STD. D84

(86) CONSTRUCT PARAPET WALL PER DETAILS ON SHEET 51

(91) CONSTRUCT 6" CONCRETE APRON WITH #4@12" O.C. EACH WAY 2" CLEAR ON TOP

' CONSTRUCTION DRAWING SET DATED 22 JUNE, 2021

K&A Engineering, Inc.
ENGINEERING LAND PLANNING SURVEYING
357 N. SHERIDAN STREET SUITE 117 CORONA, CALIFORNIA 92880 TEL (951) 279-1800 FAX (951) 279-4380

REGISTERED PROFESSIONAL ENGINEER DONALD W. BERGH No. 28949 CIVIL STATE OF CALIFORNIA

Donald Bergh 8/16/2021
ENGINEER R.C.E. 28949 DATE:

COUNTY FILE No. 970-B

COUNTY OF RIVERSIDE
TRANSPORTATION DEPARTMENT

RECMD: COUNTY OVERSIGHT ENGINEER 8/11/21
APPROVES AS TO COMPLIANCE WITH APPLICABLE COUNTY STANDARDS AND PRACTICES

REGISTRATION # 76450 DATE SIGNED

Don't Dig...Until You Call U.S.A. Toll Free DIAL 811 for the location of buried utility lines. Don't disrupt vital services.

TWO WORKING DAYS BEFORE YOU DIG

BENCH MARK
NAD83 Epoch 2011, CCS83, ZONE 6-NAVD88(CON88)
RCFC B.M. Z 15502
SET MAG NAIL W/ RCFC WCD TAG FLUSH
E 6,226,565.52 N 2,177,350.50
ELEV: 1,401.46 SURVEY DATE: 02/2013

REF	DESCRIPTION	APPR.	DATE
	REVISIONS		

RIVERSIDE COUNTY FLOOD CONTROL AND WATER CONSERVATION DISTRICT

DESIGNED BY: K&A ENGINEERING
DRAWN BY: ADA
DATE DRAWN: JUNE 2021
PB NUMBER: 226078

RECOMMENDED FOR APPROVAL BY: DATE 7-27-2021
APPROVED BY: DATE 8/4/2021

LAKELAND VILLAGE MDP

STORM DRAIN
LINE H2 INLET STRUCTURE
STRUCTURE DETAILS

PROJECT NO. 3-0-00020
DRAWING NO. 3-0207
SHEET NO. 50 OF 65

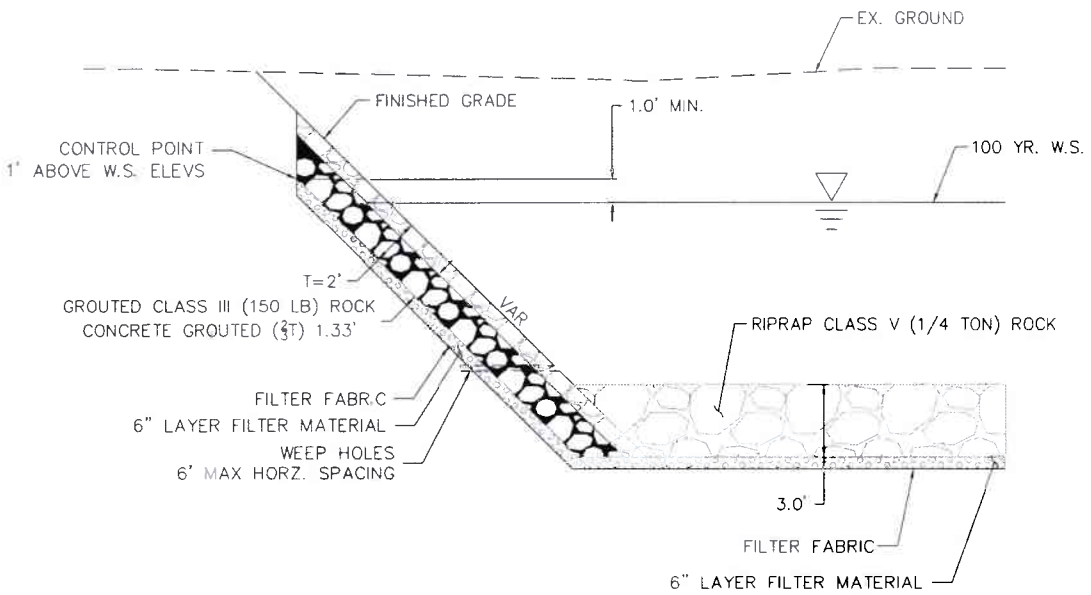

75 CONCRETED ROCK SLOPE PROTECTION
NO SCALE

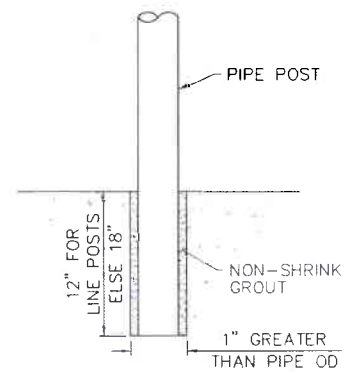

POST EMBEDMENT FOR
CABLE & CHAIN LINK FENCING
NO SCALE

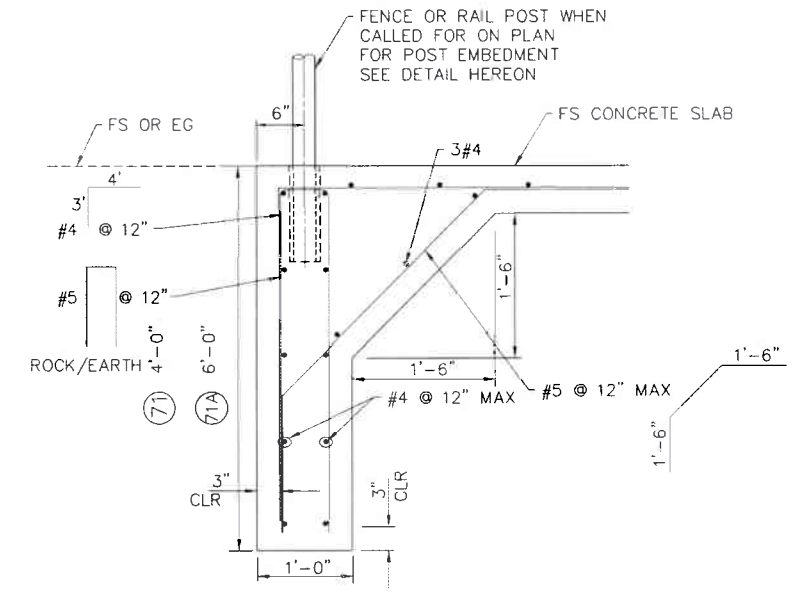

71 4' CUTOFF WALL

71A 6' CUTOFF WALL
NO SCALE
AT OPEN EDGE OF CONC SLAB
LIMITS PER PLAN

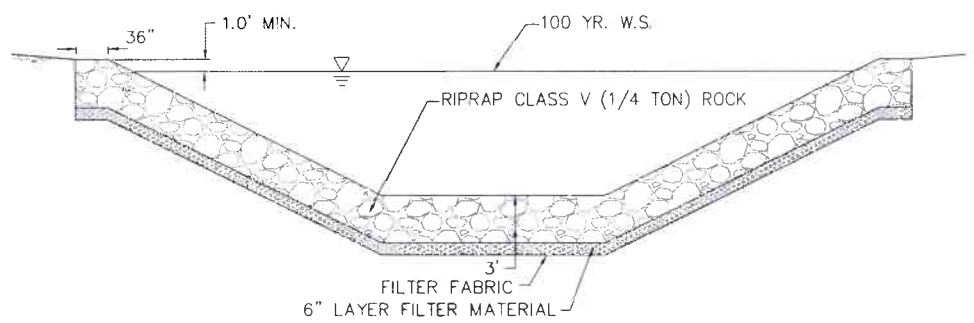

74 CLASS V (1/4 TON) ROCK SLOPE PROTECTION
NO SCALE

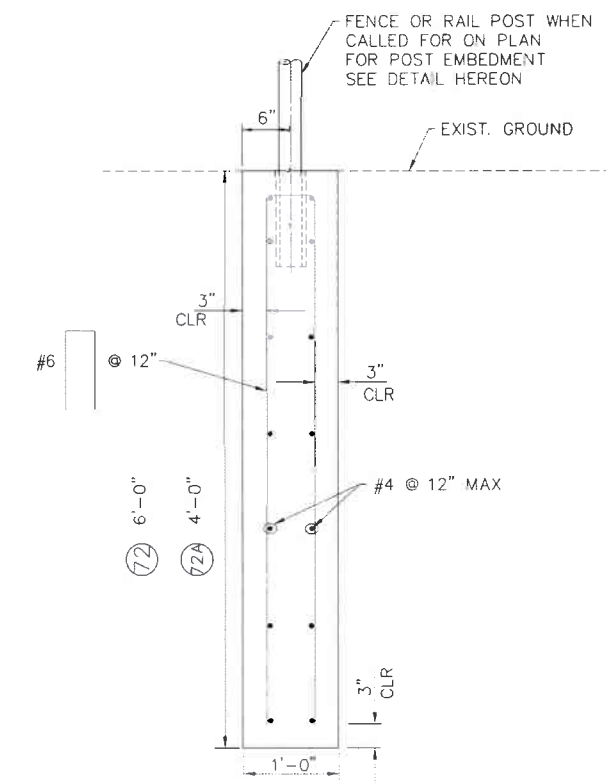

72 6' CUTOFF WALL

72A 4' CUTOFF WALL
NO SCALE
TO BE USED AT EDGE OF
ROCK SLOPE PROTECTION
LIMITS PER PLAN

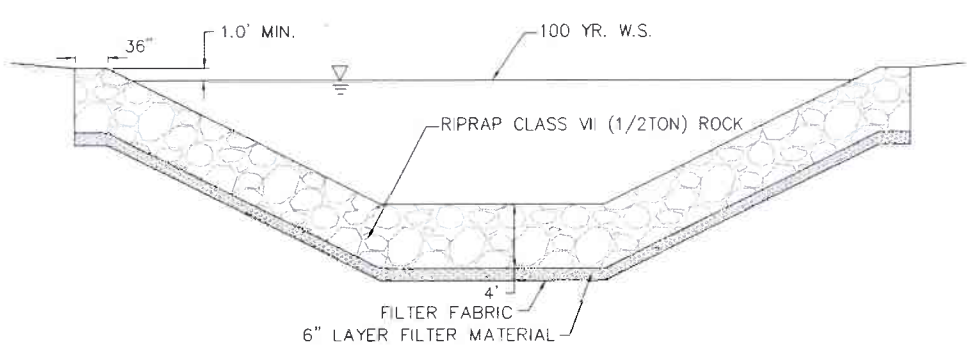

76 CLASS VII (1/2 TON) ROCK SLOPE PROTECTION
NO SCALE

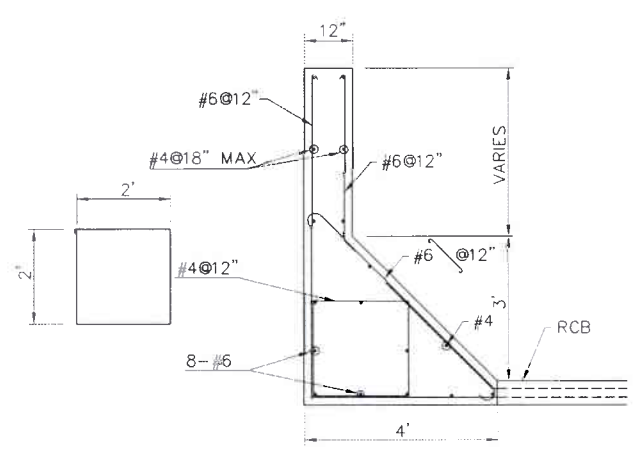

86 PARAPET
NO SCALE

CONSTRUCTION DRAWING SET DATED 22 JUNE, 2021

K&A Engineering, Inc.
ENGINEERING LAND PLANNING SURVEYING
357 N. SHERIDAN STREET
SUITE 117
CORONA, CALIFORNIA 92880
TEL: (951) 279-1800
FAX: (951) 279-4380

Donald Berg 8/16/2021
ENGINEER R.C.E. 28949 DATE:

REGISTERED PROFESSIONAL ENGINEER DONALD W. BERG No 28949 CIVIL STATE OF CALIFORNIA

COUNTY FILE No. 970-B
COUNTY OF RIVERSIDE
TRANSPORTATION DEPARTMENT
RECMD: COUNTY OVERSIGHT ENGINEER 8/11/21
APPROVES AS TO COMPLIANCE WITH APPLICABLE COUNTY STANDARDS AND PRACTICES
REGISTRATION # 76450 DATE SIGNED

Don't Dig...Until You Call U.S.A. Toll Free
DIAL 811
for the location of buried utility lines.
Don't disrupt vital services.
TWO WORKING DAYS BEFORE YOU DIG

BENCH MARK
NAD83 Epoch 2011, CCS83, ZONE 6-
NAVD88(COHB8)
RCFC B.M. Z 15502
SET MAG NAIL W/ RCFC WCD TAG FLUSH
E 6,226,565.52 N 2,177,350.50
ELEV: 1,401.46 SURVEY DATE: 02/2013

REF	DESCRIPTION	APPR	DATE
	REVISIONS		

RIVERSIDE COUNTY FLOOD CONTROL AND WATER CONSERVATION DISTRICT
DESIGNED BY K&A ENGINEERING
DRAWN BY ADA
DATE DRAWN JUNE 2021
P.S. NUMBER 226076
RECOMMENDED FOR APPROVAL BY: DATE 7-27-2021
APPROVED BY: DATE 8/4/2021

LAKELAND VILLAGE MDP
STORM DRAIN DETAILS

PROJECT NO. 3-0-00020
DRAWING NO. 3-0207
SHEET NO. 51 OF 65

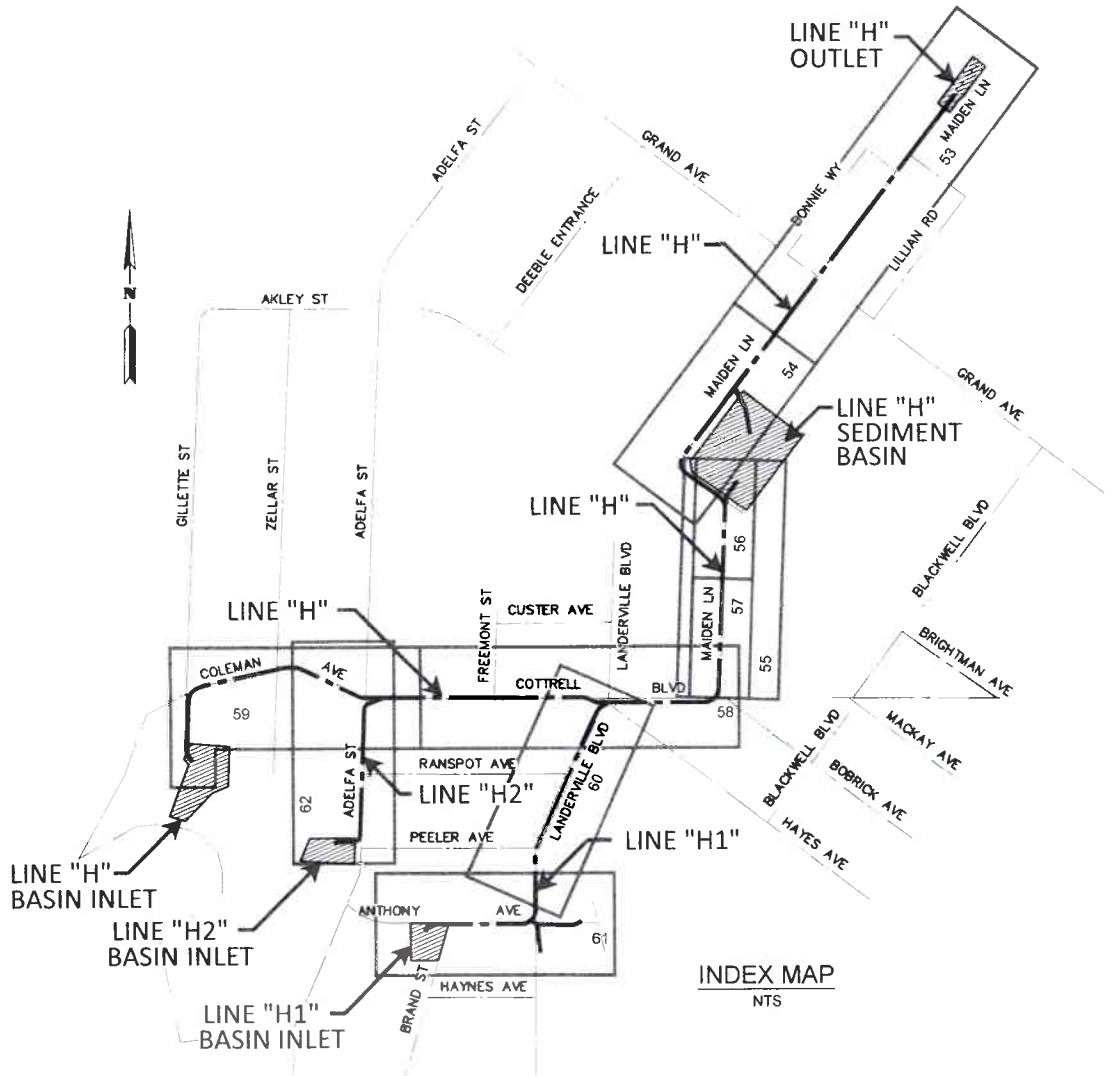

INDEX MAP
NTS

PAVEMENT NOTES

(100) CONSTRUCT TRENCH PER RCFC&WCD STD. M815
(101) GRIND EXISTING ASPHALT CONCRETE TO DEPTH SHOWN
(102) PAVE WITH TYPE "A" HOT MIX ASPHALT
(103) CONSTRUCT 3" TYPE "A" HMA OVER 6" CLASS 2 AGGREGATE BASE
(109) CONSTRUCT TYPE "E" CURB PER CALTRANS STD. A87A
(116) REMOVE & LEGALLY DISPOSE OF EXISTING AC PAVING, AC BERM & AC DIKE AS REQUIRED FOR CONSTRUCTION
(117) JOIN & MATCH EXISTING AC PAVING
(131) SAWCUT EXISTING ASPHALT PAVEMENT

TYPICAL SECTIONS LEGEND

(100) TRENCH BOUNDARY
(103) INDICATES CONSTRUCT 3" HMA. PAVING OVER 6" BASE
(101)(102) INDICATES GRIND AND OVERLAY WITH 0.12' HMA CAP
EXISTING CONCRETE
PROPOSED CONCRETE
BACKFILL
FILTER MATERIAL
CLSM BACKFILL

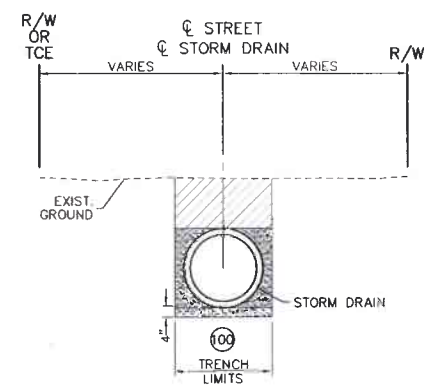

NO PAVING TYPICAL SECTION
N.T.S.

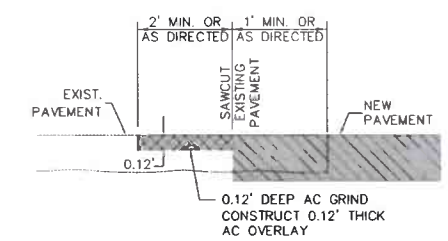

(117) STANDARD PAVEMENT OVERLAY & JOIN DETAIL
N.T.S.

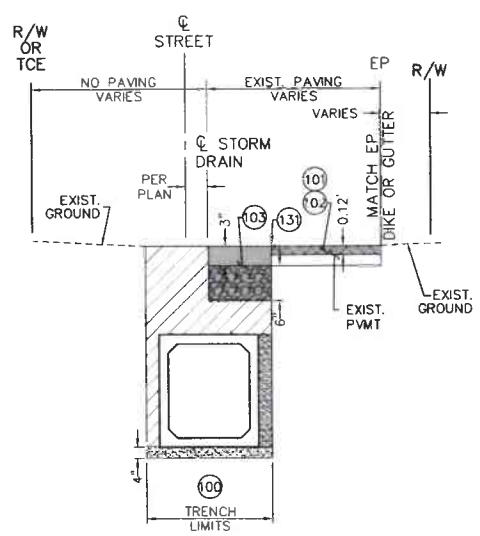

PRECAST RCB TYPICAL SECTION
N.T.S.

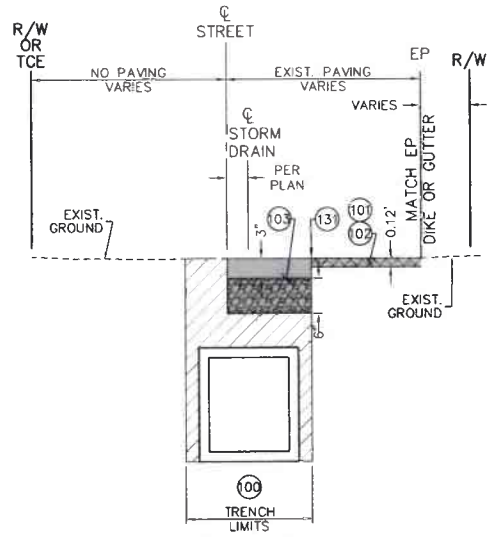

CIP RCB TYPICAL SECTION
N.T.S.

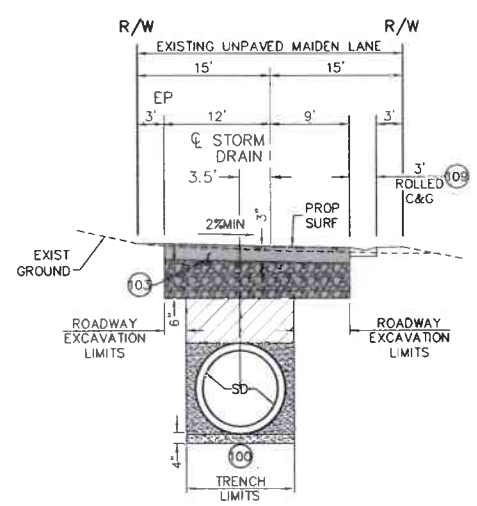

MAIDEN LANE PAVING TYPICAL SECTION
N.T.S.

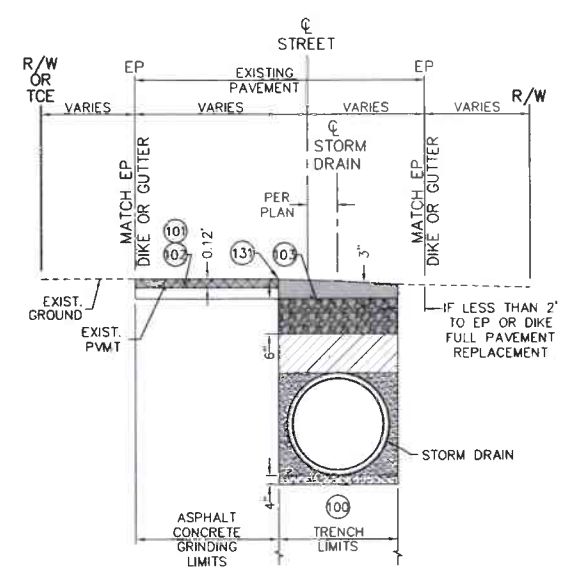

PAVING TYPICAL SECTION
N.T.S.

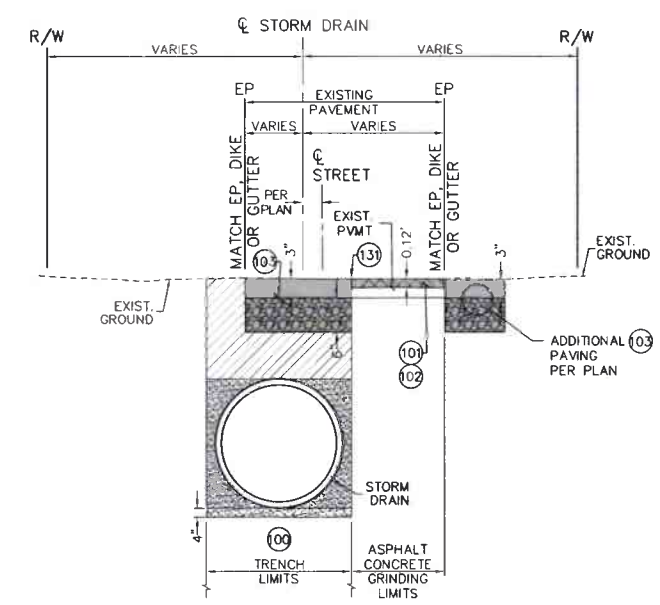

PARTIAL PAVING TYPICAL SECTION
N.T.S.

CONSTRUCTION DRAWING SET DATED 22 JUNE, 2021

K&A Engineering, Inc.
ENGINEERING
LAND PLANNING
SURVEYING
357 N. SHERIDAN STREET
SUITE 117
CORONA, CALIFORNIA 92880
TEL. (951) 279-1800
FAX (951) 279-4380

REGISTERED PROFESSIONAL ENGINEER DONALD BERST No. 28949 CIVIL STATE OF CALIFORNIA

Donald Berst 10/13/2021
ENGINEER R.C.E. 28949 DATE:

COUNTY FILE No. 970-B

COUNTY OF RIVERSIDE
TRANSPOTATION DEPARTMENT
RECMD COUNTY OVERSIGHT ENGINEER 8/11/21
APPROVES AS TO COMPLIANCE WITH APPLICABLE COUNTY STANDARDS AND PRACTICES.
REGISTRATION # 76450 DATE SIGNED

Don't Dig...Until You Call U.S.A. Toll Free
DIAL 811
for the location of buried utility lines.
Don't disrupt vital services.
TWO WORKING DAYS BEFORE YOU DIG

BENCH MARK
NAD83 Epoch 2011, CCS83, ZONE 6-
NAVD88(COH88)
RCFC B.M. Z 15502
SET MAG NAIL W/ RCFC WCD TAG FLUSH
E 6,226,565.52 N 2,177,350.50
ELEV.: 1,401.46 SURVEY DATE: 02/2013

REF.	DESCRIPTION	APPR.	DATE
A	SHEET 52 REPLACED TYPICAL SECTIONS UPDATED	E.A	10/13/21

RIVERSIDE COUNTY FLOOD CONTROL AND WATER CONSERVATION DISTRICT
DESIGNED BY: K&A ENGINEERING
DRAWN BY: ADA
DATE DRAWN: JUNE 2021
PB NUMBER: 226078
RECOMMENDED FOR APPROVAL BY: DATE: 7-27-2021
APPROVED BY: DATE: 8/4/2021

LAKELAND VILLAGE MDP

PAVEMENT REPLACEMENT PLAN

INDEX MAP & TYPICAL SECTIONS

PROJECT NO. 3-0-00020
DRAWING NO. 3-0207
SHEET NO. 52 OF 65

Drawing: P:\22467\Flex\Storm Drain\0208 - Plan - SD - 25 - 52.dwg Layout: 52 INDEX MAP & TYPICAL SECTIONS Saved: 10/13/2021 7:11 AM Plotted: 10/13/2021 11:11 AM By: Patricia Bravo

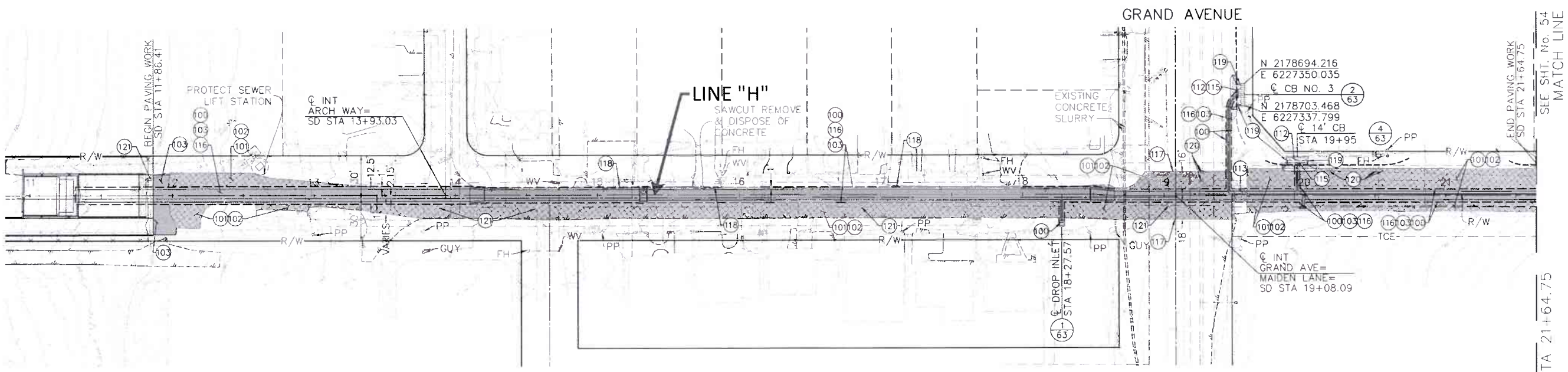

MAIDEN LANE

N

40' 0' 40'

SCALE 1"=40'

PAVEMENT NOTES

(100) CONSTRUCT TRENCH PER RCFC&WCD STD. M815

(101) GRIND EXISTING ASPHALT CONCRETE TO DEPTH SHOWN

(102) PAVE WITH TYPE "A" HOT MIX ASPHALT

(103) CONSTRUCT 3" TYPE "A" HMA OVER 6" CLASS 2 AGGREGATE BASE

(112) CONCRETE SIDEWALK TO BE POURED MONOLITHICALLY WITH TOP OF CATCH BASIN PER RCTD STD. NO. 300

(113) REMOVE, LEGALLY DISPOSE OF & REPLACE IN KIND INTERFERING PORTION OF EXISTING CONCRETE AS REQUIRED FOR CONSTRUCTION

(115) REMOVE & LEGALLY DISPOSE OF EXISTING CONCRETE CURB, GUTTER, SIDEWALK, DRIVEWAY & MISC. CONCRETE, AS REQUIRED FOR CONSTRUCTION

(116) REMOVE & LEGALLY DISPOSE OF EXISTING AC PAVING, AC BERM & AC DIKE AS REQUIRED FOR CONSTRUCTION

(117) JOIN & MATCH EXISTING AC PAVING PER DETAIL ON SHEET 52

(118) JOIN & MATCH EXISTING DRIVEWAY

(119) JOIN & MATCH EXISTING WALKWAY

(120) EXISTING WATER VALVE – ADJUST TO GRADE

(121) EXISTING SEWER MANHOLE – ADJUST TO GRADE

LEGEND

(100) ----- TRENCH BOUNDARY

(103) INDICATES CONSTRUCT 3" HMA. PAVING OVER 6" BASE

(101)(102) INDICATES GRIND AND OVERLAY WITH 0.12' HMA CAP

(115) REMOVE & DISPOSE OF EXISTING CONCRETE

(113) REMOVE & REPLACE EXISTING CONCRETE

PROPOSED CATCH BASIN

PROPOSED STORM DRAIN PIPE AND MANHOLE

(7/33) INDICATES CATCH BASIN NO. INDICATES SHEET NO.

NOTE:
SEE SHEETS 63 & 64 "CATCH BASIN DETAILS" FOR BERM LENGTHS AND PAVEMENT DETAILS.

CONSTRUCTION DRAWING SET DATED 22 JUNE, 2021

COUNTY FILE No. 970-B

K&A Engineering, Inc.
ENGINEERING LAND PLANNING SURVEYING
357 N. SHERIDAN STREET
SUITE 117
CORONA, CALIFORNIA 92880
TEL. (951) 279-1800
FAX (951) 279-4380

REGISTERED PROFESSIONAL ENGINEER DONALD W. BERST No. 28949 CIVIL STATE OF CALIFORNIA

Donald Berst 8/16/2021
ENGINEER R.C.E. 28949 DATE

COUNTY OF RIVERSIDE
TRANSPOTATION DEPARTMENT
RECMD. COUNTY OVERSIGHT ENGINEER 8/11/21
APPROVES AS TO COMPLIANCE WITH APPLICABLE COUNTY STANDARDS AND PRACTICES
REGISTRATION # 76450 DATE SIGNED

Don't Dig...Until You Call U.S.A. Toll Free
DIAL 811
for the location of buried utility lines.
Don't disrupt vital services.
TWO WORKING DAYS BEFORE YOU DIG

BENCH MARK
NAD83 Epoch 2011, CCS83, ZONE 6
NAVD88(COH88)
RCFC B.M. Z 15502
SET MAG NAIL W/ RCFC WCD TAG FLUSH
E 6,226,565.52 N 2,177,359.50
ELEV= 1,401.46 SURVEY DATE: 02/2013

REF	DESCRIPTION	APPR	DATE
	REVISIONS		

RIVERSIDE COUNTY FLOOD CONTROL AND WATER CONSERVATION DISTRICT

DESIGNED BY: K&A ENGINEERING
DRAWN BY: ADA
DATE DRAWN: JUNE 2021
P8 NUMBER: 226078

RECOMMENDED FOR APPROVAL BY: DATE 7-27-2021
APPROVED BY: DATE 8/4/2021

LAKELAND VILLAGE MDP

PAVEMENT REPLACEMENT PLAN
MAIDEN LANE

PROJECT NO. 3-0-00020
DRAWING NO. 3-0207
SHEET NO. 53 OF 65

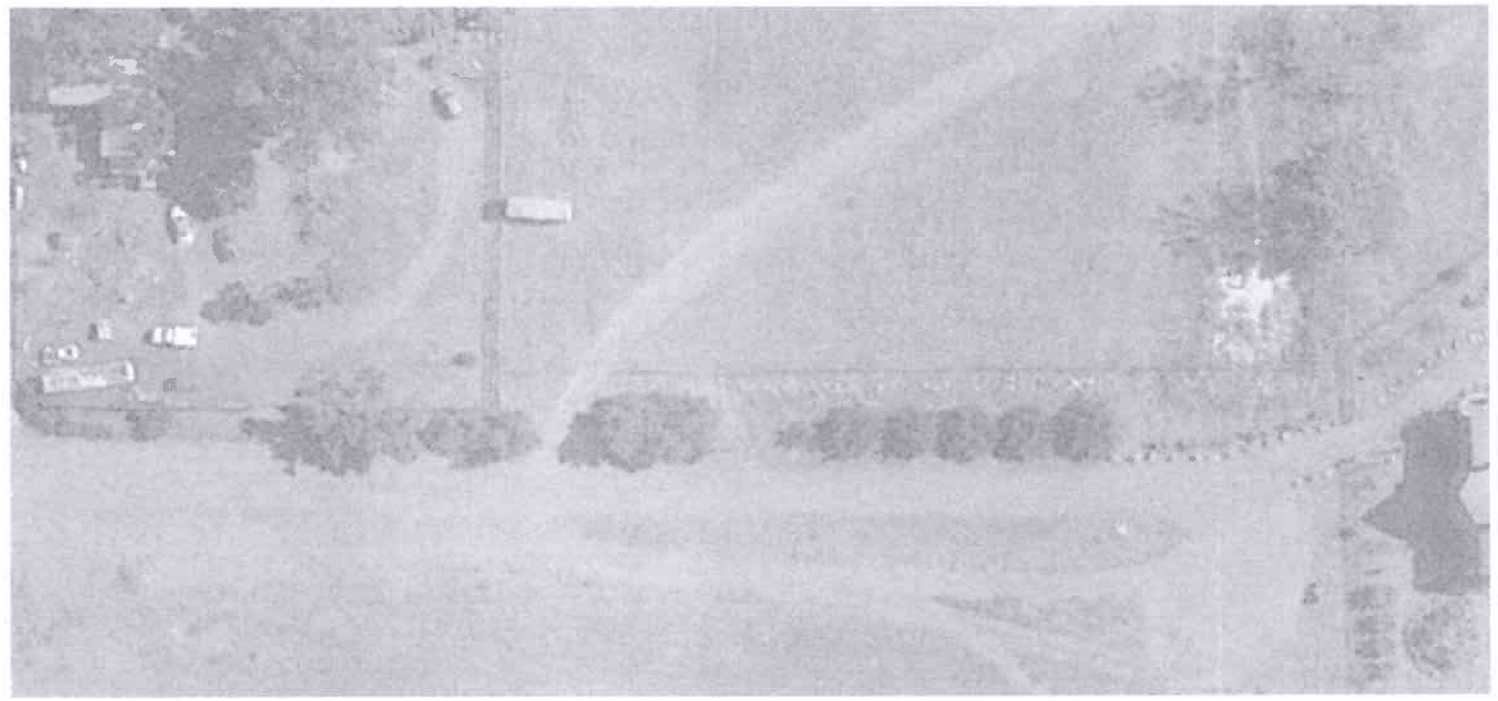

MAIDEN LANE

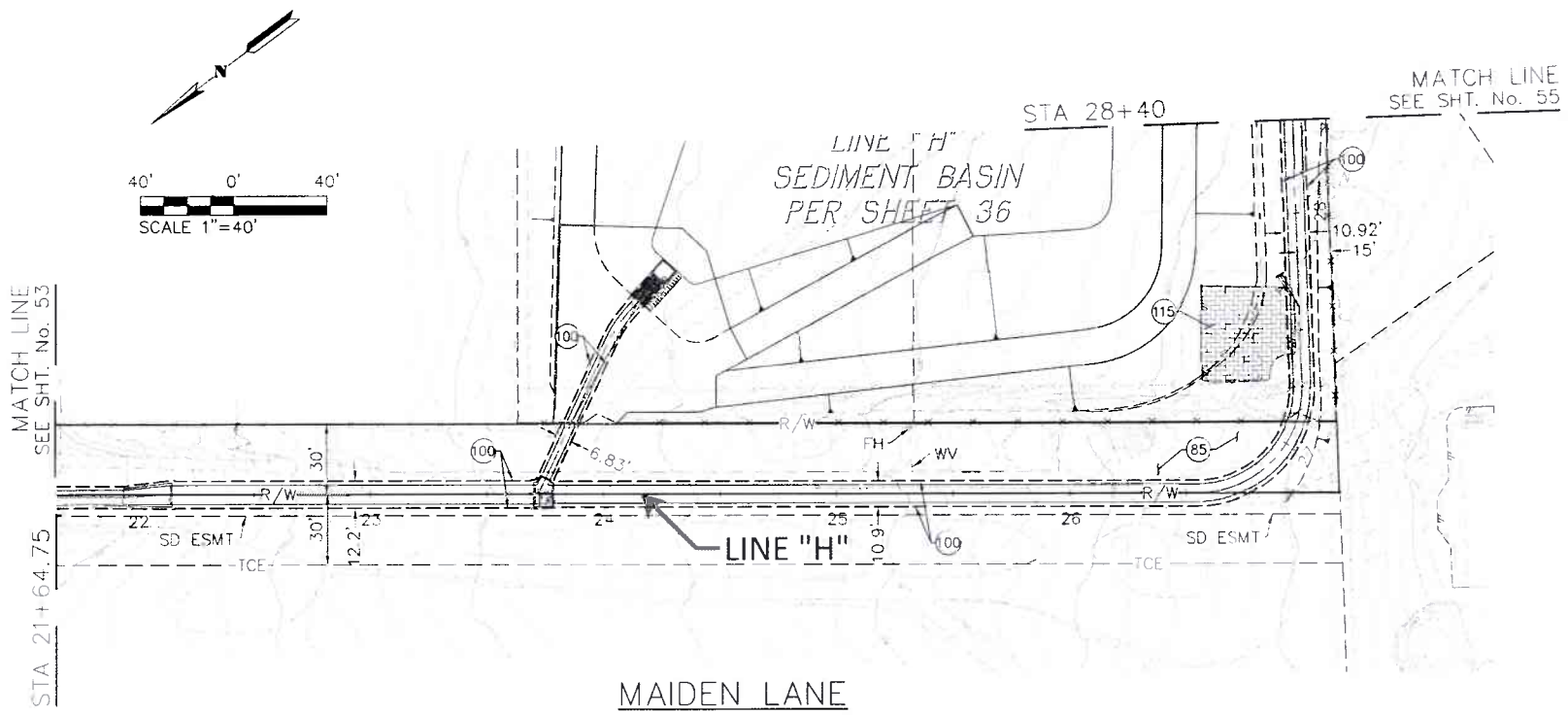

PAVEMENT NOTES

(85) GRADE MAIDEN LANE AS SHOWN WITHIN LIMITS OR AS DIRECTED BY ENGINEER

(100) CONSTRUCT TRENCH PER RCFC&WCD STD. M815

(115) REMOVE & LEGALLY DISPOSE OF EXISTING CONCRETE CURB, GUTTER, SIDEWALK, DRIVEWAY & MISC. CONCRETE, AS REQUIRED FOR CONSTRUCTION

LEGEND

(100) ------ TRENCH BOUNDARY

(103) INDICATES CONSTRUCT 3" HMA. PAVING OVER 6" BASE

(101)(102) INDICATES GRIND AND OVERLAY WITH 0.12' HMA CAP

(115) REMOVE & DISPOSE OF EXISTING CONCRETE

(113) REMOVE & REPLACE EXISTING CONCRETE

PROPOSED CATCH BASIN

PROPOSED STORM DRAIN PIPE AND MANHOLE

(7/33) INDICATES CATCH BASIN NO. INDICATES SHEET NO.

CONSTRUCTION DRAWING SET DATED 22 JUNE, 2021

NOTE:
SEE SHEETS 63 & 64 "CATCH BASIN DETAILS" FOR BERM LENGTHS AND PAVEMENT DETAILS.

K&A Engineering, Inc.
ENGINEERING LAND PLANNING SURVEYING
357 N. SHERIDAN STREET SUITE 117 CORONA, CALIFORNIA 92880 TEL (951) 279-1800 FAX (951) 279-4380

REGISTERED PROFESSIONAL ENGINEER DONALD W. BERGH No. 28949 CIVIL STATE OF CALIFORNIA

Donald Bergh 8/16/2021
ENGINEER R.C.E. 28949 DATE

COUNTY FILE No. 970-B
COUNTY OF RIVERSIDE
TRANSPOTATION DEPARTMENT
RECMD COUNTY OVERSIGHT ENGINEER 8/11/21
APPROVES AS TO COMPLIANCE WITH APPLICABLE COUNTY STANDARDS AND PRACTICES
REGISTRATION # 76450 DATE SIGNED

Don't Dig...Until You Call U.S.A. Toll Free
DIAL 811
for the location of buried utility lines.
Don't disrupt vital services.
BURIED LINE
TWO WORKING DAYS BEFORE YOU DIG

BENCH MARK
NAD83 Epoch 2011, CCS83, ZONE 6-NAVD88(COH88)
RCFC B.M. Z 15502
SET MAG NAIL W/ RCFC WCD TAG FLUSH
E 6,226,565.52 N 2,177,350.50
ELEV: 1,401.46 SURVEY DATE 02/2013

REF	REVISIONS	APPR	DATE

RIVERSIDE COUNTY FLOOD CONTROL AND WATER CONSERVATION DISTRICT
DESIGNED BY: K&A ENGINEERING
DRAWN BY: ADA
DATE DRAWN: JUNE 2021
PB NUMBER: 226078
RECOMMENDED FOR APPROVAL BY: DATE 7-27-2021
APPROVED BY: DATE 8/4/2021

LAKELAND VILLAGE MDP
PAVEMENT REPLACEMENT PLAN
MAIDEN LANE

PROJECT NO. 3-0-00020
DRAWING NO. 3-0207
SHEET NO. 54 OF 65

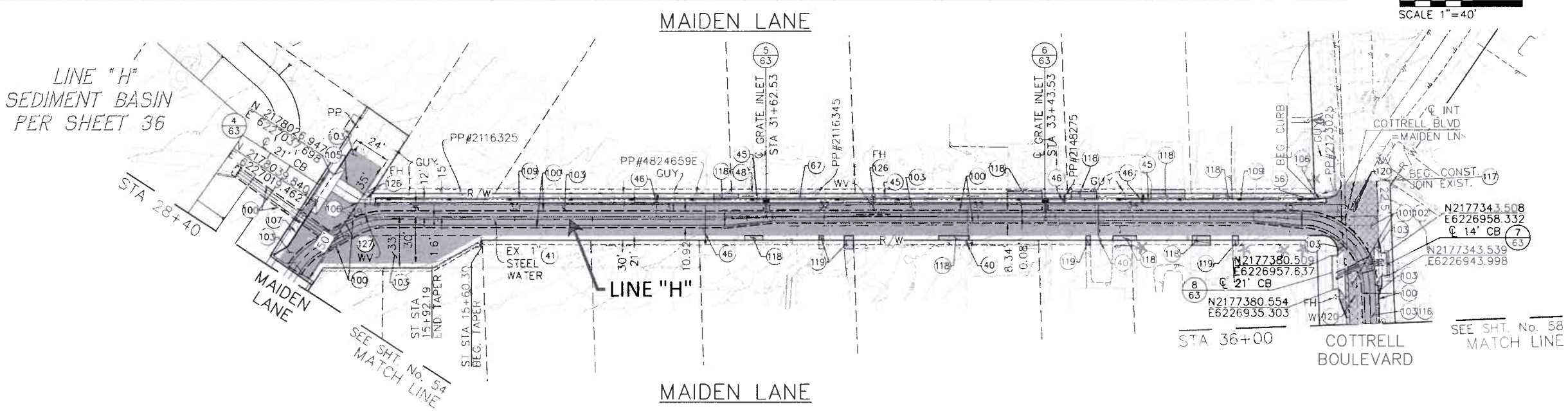

PAVEMENT NOTES

(40) RELOCATE WATER (SIZE PER PLAN) PER WATER IMPROVEMENT PLAN ON SHEETS W1–W5

(41) VERIFY PLOTTED UTILITY IS IN THIS LOCATION, IF FOUND, VERIFY IF ABANDONED & REMOVE AS NEEDED

(45) REMOVE & RELOCATE INTERFERING MAILBOX

(46) REMOVE & RELOCATE INTERFERING WATER METER PER SHEETS W1–W5 OF WATER IMPROVEMENT PLANS

(48) STRUCTURE TO BE SALVAGED OR REPLACED IN KIND

(56) REMOVE & RELOCATE GARDEN FEATURES AS REQUIRED FOR CONSTRUCTION

(67) FENCE TO BE SALVAGED OR REPLACED IN KIND BEHIND RIGHT–OF–WAY

(100) CONSTRUCT TRENCH PER RCFC&WCD STD. M815

(101) GRIND EXISTING ASPHALT CONCRETE TO DEPTH SHOWN

(102) PAVE WITH TYPE "A" HOT MIX ASPHALT

(103) CONSTRUCT 3" TYPE "A" HMA OVER 6" CLASS 2 AGGREGATE BASE

(105) CONSTRUCT CONCRETE CROSS GUTTER PER RCTD STD. NO. 209

(106) CONSTRUCT CURB & DIKE TRANSITIONS PER DETAILS ON SHEET 65

(107) CONSTRUCT 6" AC DIKE PER RCTD STD. NO. 212

(109) CONSTRUCT TYPE "E" CURB PER CALTRANS STD. A87A

(116) REMOVE & LEGALLY DISPOSE OF EXISTING AC PAVING, AC BERM & AC DIKE AS REQUIRED FOR CONSTRUCTION

(117) JOIN & MATCH EXISTING AC PAVING PER DETAIL ON SHEET 52

(118) JOIN & MATCH EXISTING DRIVEWAY

(119) JOIN & MATCH EXISTING WALKWAY

(120) EXISTING WATER VALVE – ADJUST TO GRADE

(126) REMOVE & RELOCATE FIRE HYDRANT

(127) REMOVE & RELOCATE EXISTING WATER VALVE

LEGEND

(100) ----- TRENCH BOUNDARY

(103) INDICATES CONSTRUCT 3" HMA. PAVING OVER 6" BASE

(101)(102) INDICATES GRIND AND OVERLAY WITH 0.12' HMA CAP

(115) REMOVE & DISPOSE OF EXISTING CONCRETE

(113) REMOVE & REPLACE EXISTING CONCRETE

PROPOSED CATCH BASIN

PROPOSED STORM DRAIN PIPE AND MANHOLE

(7/33) INDICATES CATCH BASIN NO. INDICATES SHEET NO.

ST STA STREET STATION

NOTE:
MAIDEN LANE CENTERLINE STATIONING INCREASES FROM SOUTH TO NORTH WHERE STREET IMPROVEMENT PLAN & PROFILE SHEETS ARE REQUIRED.

NOTE:
SEE SHEETS 63 & 64 "CATCH BASIN DETAILS" FOR BERM LENGTHS AND PAVEMENT DETAILS.

CONSTRUCTION DRAWING SET DATED 22 JUNE, 2021

COUNTY FILE No. 970–B

K&A ENGINEERING LAND PLANNING SURVEYING
Engineering, Inc.
357 N. SHERIDAN STREET
SUITE 117
CORONA, CALIFORNIA 92880
TEL (951) 279–1800
FAX (951) 279–4380

REGISTERED PROFESSIONAL ENGINEER DONALD BERGSTEN No. 26949 CIVIL STATE OF CALIFORNIA

ENGINEER R.C.E. 26949 — DATE 8/16/2021

COUNTY OF RIVERSIDE TRANSPORTATION DEPARTMENT
RECMD COUNTY OVERSIGHT ENGINEER 8/11/21
APPROVES AS TO COMPLIANCE WITH APPLICABLE COUNTY STANDARDS AND PRACTICES
REGISTRATION # 76450 DATE SIGNED

Don't Dig...Until You Call U.S.A. Toll Free DIAL 811 for the location of buried utility lines. Don't disrupt vital services.
BURIED CABLE
TWO WORKING DAYS BEFORE YOU DIG

BENCH MARK
NAD83 Epoch 2011, CCS83, ZONE 6–NAVD88(CGH88)
RCFC B.M. Z 15502
SET MAG NAIL W/ RCFC WCD TAG FLUSH
E 6,226,565.52 N 2,177,350.50
ELEV.: 1,401.46 SURVEY DATE: 02/2013

REF	DESCRIPTION	APPR.	DATE
	REVISIONS		

RIVERSIDE COUNTY FLOOD CONTROL AND WATER CONSERVATION DISTRICT
DESIGNED BY: K&A ENGINEERING
DRAWN BY: ADA
DATE DRAWN: JUNE 2021
PB NUMBER: 226078
RECOMMENDED FOR APPROVAL BY: DATE 7-27-2021
APPROVED BY: DATE 8/4/2021

LAKELAND VILLAGE MDP
PAVEMENT REPLACEMENT PLAN
MAIDEN LANE

PROJECT NO. 3-0-00020
DRAWING NO. 3-0207
SHEET NO. 55 OF 65

NOTE: CONTRACTOR SHALL PROTECT IN PLACE ALL UTILITIES UNLESS OTHERWISE NOTED.

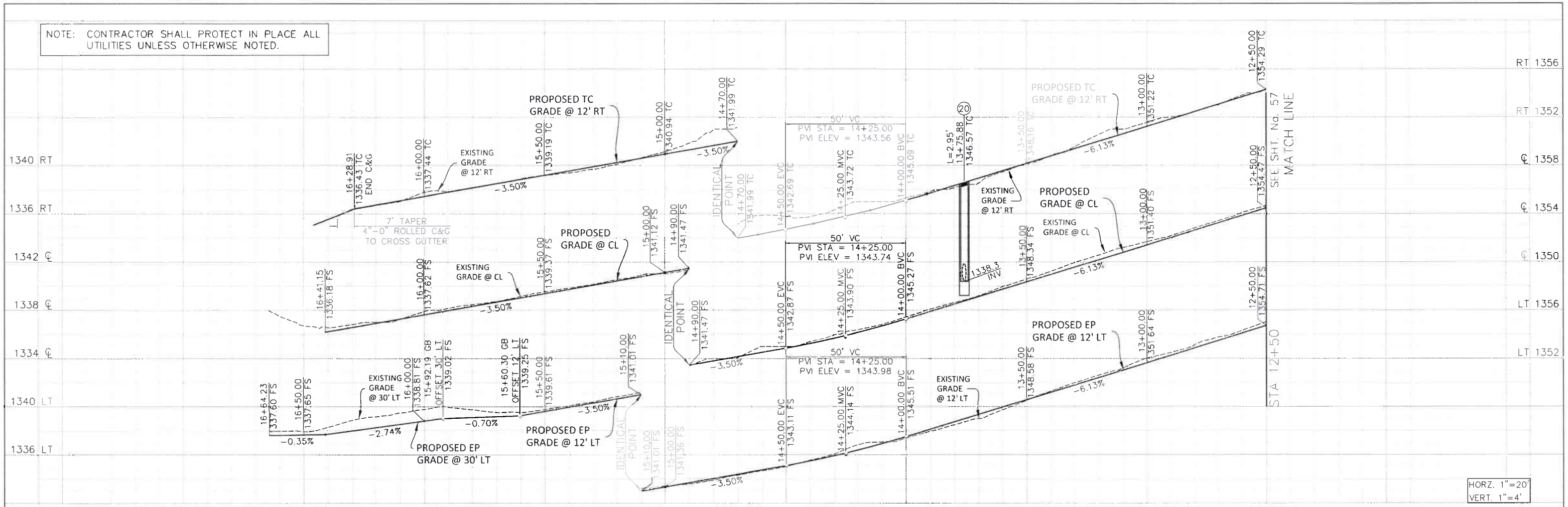

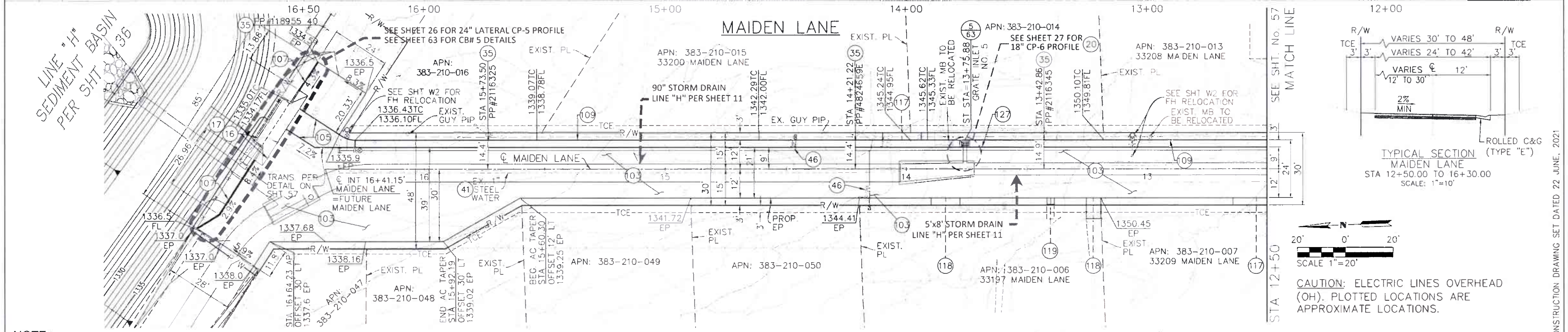

CAUTION: ELECTRIC LINES OVERHEAD (OH). PLOTTED LOCATIONS ARE APPROXIMATE LOCATIONS.

CONSTRUCTION DRAWING SET DATED 22 JUNE, 2021

NOTE:
MAIDEN LANE STREET PLAN CENTERLINE STATIONING INCREASES FROM SOUTH TO NORTH WHERE STREET IMPROVEMENT PLAN & PROFILE SHEETS ARE REQUIRED. STATIONING HEREON IS STREET STATIONING.

NOTE:
PROPOSED WATER MAIN RELOCATION PER SHEET W-2.

NOTE:
SEE SHEETS 63 & 64 "CATCH BASIN DETAILS" FOR BERM LENGTHS AND PAVEMENT DETAILS.

NOTES

(16) CONSTRUCT CATCH BASIN NO.1 PER RCFC&WCD STD. CB100
(17) CONSTRUCT LOCAL DEPRESSION NO.2 PER RCFC&WCD STD. LD201
(20) CONSTRUCT DRAINAGE INLET TYPE "G6" PER CALTRANS STD. D73B WITH TYPE "18-10" BICYCLE & PEDESTRIAN PROOF GRATE PER CALTRANS STD. D77B
(41) VERIFY PLOTTED UTILITY IS IN THIS LOCATION, IF FOUND, VERIFY IF ABANDONED & REMOVE AS NEEDED
(46) REMOVE & RELOCATE INTERFERING WATER METER PER SHEETS W1-W5 OF WATER IMPROVEMENT PLANS
(103) CONSTRUCT 3" TYPE "A" HMA OVER 6" CLASS 2 AGGREGATE BASE
(105) CONSTRUCT CONCRETE CROSS GUTTER PER RCTD STD. NO. 209 & DETAIL ON SHEET 57
(107) CONSTRUCT 6" AC DIKE PER RCTD STD. NO. 212
(109) CONSTRUCT TYPE "E" CURB PER CALTRANS STD. A87A
(117) JOIN & MATCH EXISTING AC PAVING PER DETAIL ON SHEET 52
(118) JOIN & MATCH EXISTING DRIVEWAY
(119) JOIN & MATCH EXISTING WALKWAY

K&A Engineering, Inc.
ENGINEERING LAND PLANNING SURVEYING
357 N. SHERIDAN STREET SUITE 117 CORONA, CALIFORNIA 92880 TEL (951) 279-1800 FAX (951) 279-4380
Donald Berg 8/16/2021
ENGINEER R.C.E. 28949 DATE
REGISTERED PROFESSIONAL ENGINEER DONALD W. BERG No. 28949 STATE OF CALIFORNIA

COUNTY FILE No. 970-B

COUNTY OF RIVERSIDE TRANSPORTATION DEPARTMENT
RECMD COUNTY OVERSIGHT ENGINEER 8/11/21
APPROVES AS TO COMPLIANCE WITH APPLICABLE COUNTY STANDARDS AND PRACTICES
REGISTRATION # 76450 DATE SIGNED

Don't Dig...Until You Call U.S.A. Toll Free DIAL 811 for the location of buried utility lines. Don't disrupt vital services.
TWO WORKING DAYS BEFORE YOU DIG

BENCH MARK
NAD83 Epoch 2011, CCS83, ZONE 6 - NAVD88(CGH88)
RCFC B.M. Z 15502
SET MAG NAIL W/ RCFC WCD TAG FLUSH
E 6,226,565.53 N 2,177,350.50
ELEV: 1,401.46 SURVEY DATE: 02/2013

REF	DESCRIPTION	APPR	DATE
	REVISIONS		

RIVERSIDE COUNTY FLOOD CONTROL AND WATER CONSERVATION DISTRICT
DESIGNED BY: K&A ENGINEERING
DRAWN BY: ADA
DATE DRAWN: JUNE 2021
PB NUMBER: 226078
RECOMMENDED FOR APPROVAL BY: DATE 7-27-2021
APPROVED BY: DATE 8/4/2021

LAKELAND VILLAGE MDP LINE H PAVEMENT REPLACEMENT PLAN
MAIDEN LANE - PLAN & PROFILE

PROJECT NO. 3-0-00020
DRAWING NO. 03-0207
SHEET NO. 56 OF 65

NOTE: CONTRACTOR SHALL PROTECT IN PLACE ALL UTILITIES UNLESS OTHERWISE NOTED.

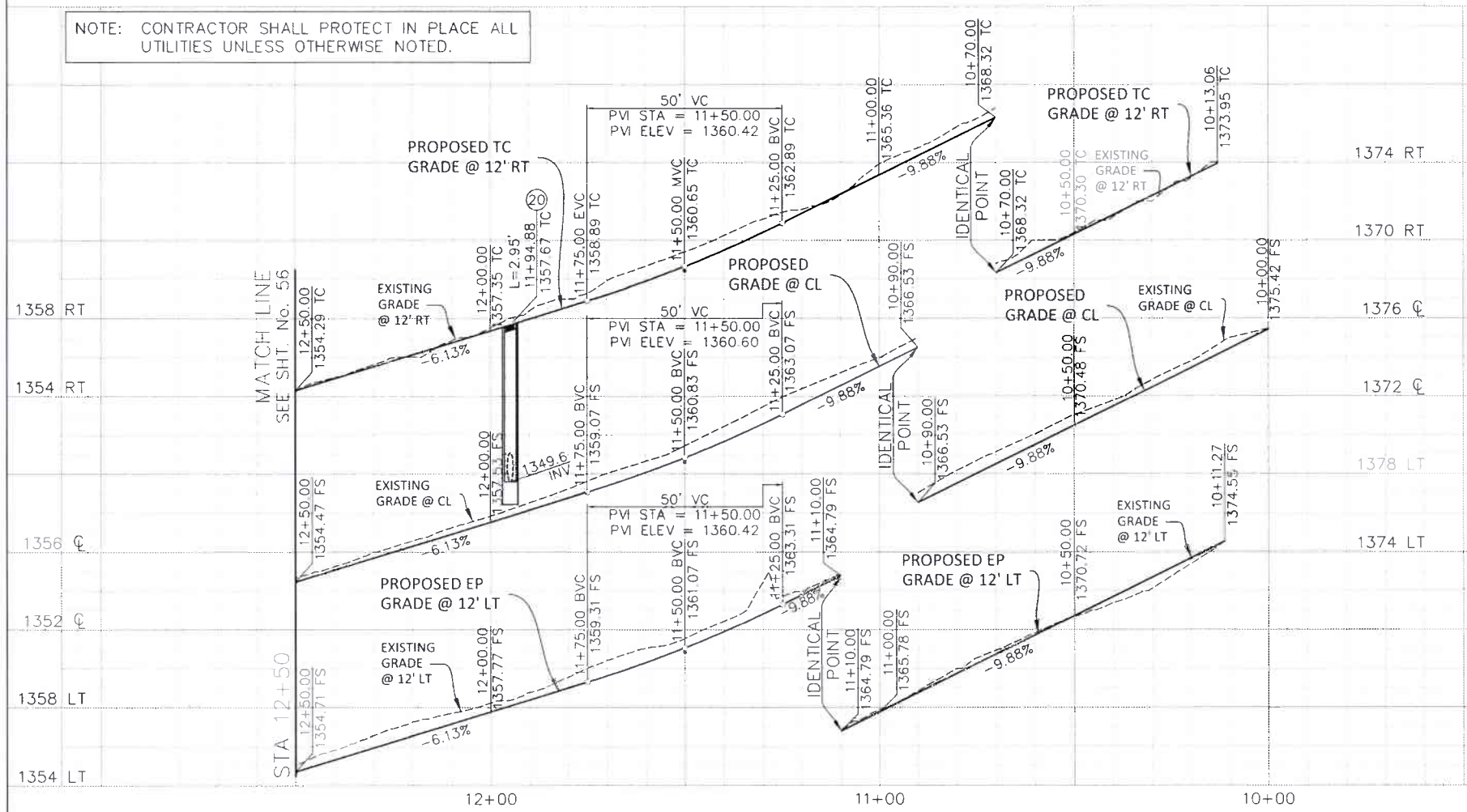

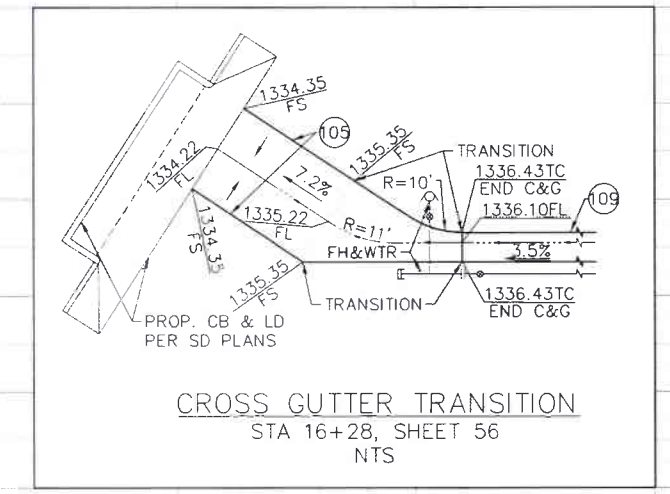

CROSS GUTTER TRANSITION
STA 16+28, SHEET 56
NTS

HORZ 1"=20'
VERT. 1"=4'

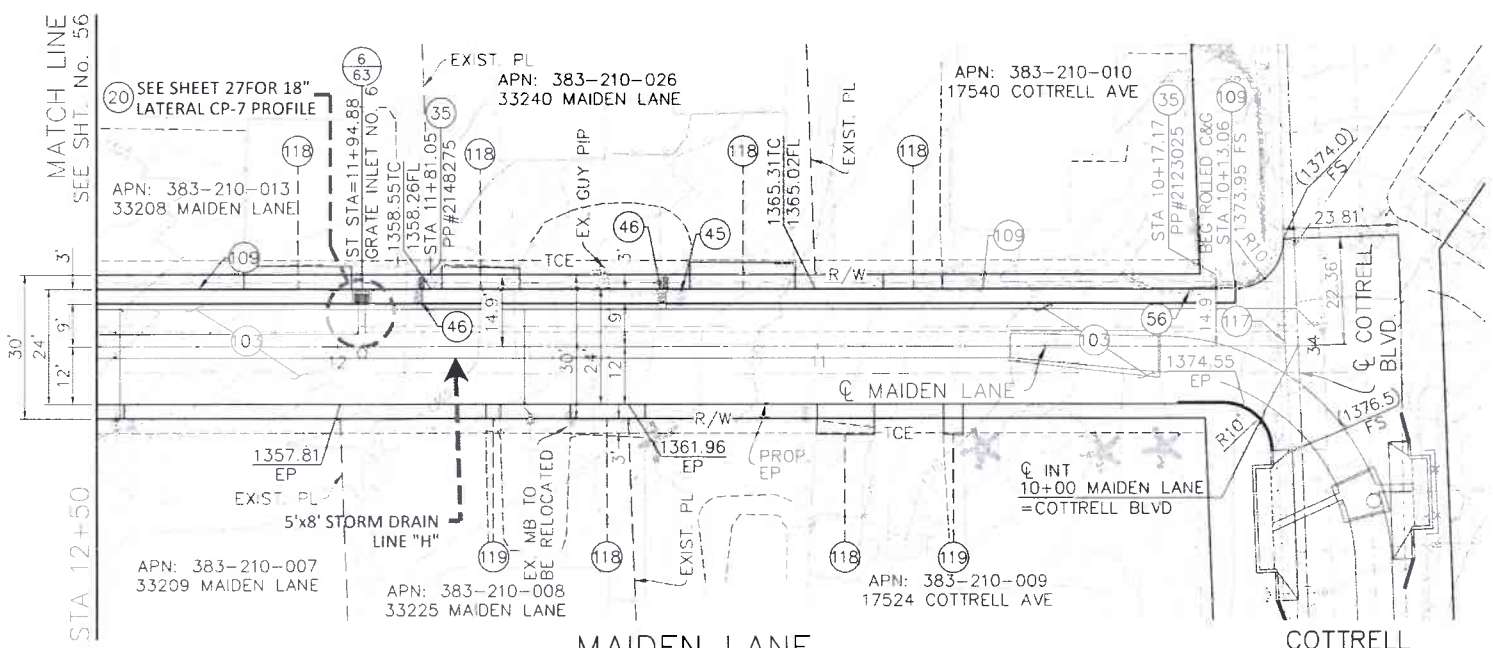

MAIDEN LANE

NOTE:
SEE SHEETS 63 & 64 "CATCH BASIN DETAILS" FOR BERM LENGTHS AND PAVEMENT DETAILS.

N
20' 0' 20'
SCALE 1"=20'

COTTRELL BOULEVARD PAVING SEE SHTS 58 & 59

NOTES

(20) CONSTRUCT DRAINAGE INLET TYPE "G6" PER CALTRANS STD. D73B WITH TYPE "18-10" BICYCLE & PEDESTRIAN PROOF GRATE PER CALTRANS STD. D77B

(45) REMOVE & RELOCATE INTERFERING MAILBOX

(46) REMOVE & RELOCATE INTERFERING WATER METER PER SHEETS W1-W5 OF WATER IMPROVEMENT PLANS

(56) REMOVE & RELOCATE GARDEN FEATURES AS REQUIRED FOR CONSTRUCTION

(103) CONSTRUCT 3" TYPE "A" HMA OVER 6" CLASS 2 AGGREGATE BASE

(109) CONSTRUCT TYPE "E" CURB PER CALTRANS STD. A87A

(117) JOIN & MATCH EXISTING AC PAVING PER DETAIL HEREON

(118) JOIN & MATCH EXISTING DRIVEWAY

(119) JOIN & MATCH EXISTING WALKWAY

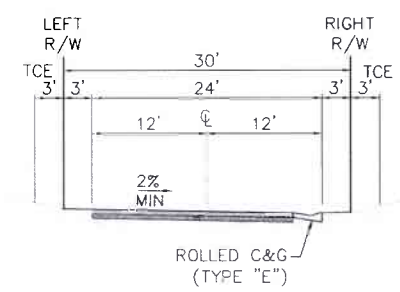

TYPICAL SECTION
MAIDEN LANE
STA 10+00.00 TO 12+50.00
SCALE: 1"=10'

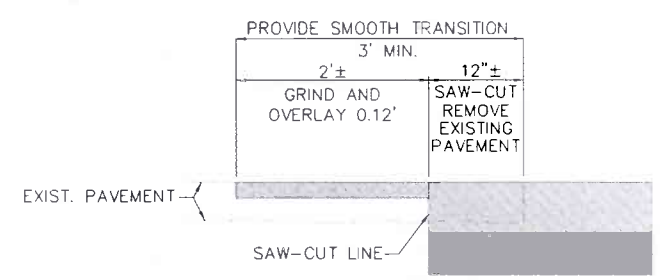

STANDARD PAVEMENT JOIN DETAIL

NOTE:
MAIDEN LANE STREET PLAN CENTERLINE STATIONING INCREASES FROM SOUTH TO NORTH WHERE STREET IMPROVEMENT PLAN & PROFILE SHEETS ARE REQUIRED. STATIONING HEREON IS STREET STATIONING.

CONSTRUCTION DRAWING SET DATED 22 JUNE, 2021

K&A Engineering, Inc. — ENGINEERING, LAND PLANNING, SURVEYING — 357 N. SHERIDAN STREET, SUITE 117, CORONA, CALIFORNIA 92880, TEL (951) 279-1800, FAX (951) 279 4380

Donald Bergh — 8/16/2021 — ENGINEER R.C.E. 28949 — DATE

COUNTY FILE No. 970-B
COUNTY OF RIVERSIDE TRANSPOTATION DEPARTMENT
RECMD COUNTY OVERSIGHT ENGINEER — 8/11/21
APPROVES AS TO COMPLIANCE WITH APPLICABLE COUNTY STANDARDS AND PRACTICES
REGISTRATION # 76450 — DATE SIGNED

Don't Dig...Until You Call U.S.A. Toll Free DIAL 811 for the location of buried utility lines. Don't disrupt vital services. TWO WORKING DAYS BEFORE YOU DIG

BENCH MARK
NAD83 Epoch 2011, CCS83, ZONE 6-NAVD88(CORS88)
RCFC B.M. Z 15502
SET MAG NAIL W/ RCFC WCD TAG FLUSH
E 6,226,565.52 N 2,177,350.50
ELEV: 1,401.46 SURVEY DATE: 02/2013

REF	DESCRIPTION	APPR	DATE
	REVISIONS		

RIVERSIDE COUNTY FLOOD CONTROL AND WATER CONSERVATION DISTRICT
DESIGNED BY: K&A ENGINEERING
DRAWN BY: ADA
DATE DRAWN: JUNE 2021
P8 NUMBER: 226078
RECOMMENDED FOR APPROVAL BY: — DATE 7-27-2021
APPROVED BY: — DATE 8/4/2021

LAKELAND VILLAGE MDP
LINE H
PAVEMENT REPLACEMENT PLAN
MAIDEN LANE – PLAN & PROFILE

PROJECT NO. 3-0-00020
DRAWING NO. 03-0207
SHEET NO. 57 OF 65

LEGEND

- (100) ----- TRENCH BOUNDARY
- (103) INDICATES CONSTRUCT 3" HMA. PAVING OVER 6" BASE
- (101)(102) INDICATES GRIND AND OVERLAY WITH 0.12' HMA CAP
- (115) REMOVE & DISPOSE OF EXISTING CONCRETE
- (113) REMOVE & REPLACE EXISTING CONCRETE
- PROPOSED CATCH BASIN
- PROPOSED STORM DRAIN PIPE AND MANHOLE
- (7/33) INDICATES CATCH BASIN NO. / INDICATES SHEET NO.

COTTRELL BOULEVARD

PAVEMENT NOTES

(100) CONSTRUCT TRENCH PER RCFC&WCD STD. M815
(101) GRIND EXISTING ASPHALT CONCRETE TO DEPTH SHOWN
(102) PAVE WITH TYPE "A" HOT MIX ASPHALT
(103) CONSTRUCT 3" TYPE "A" HMA OVER 6" CLASS 2 AGGREGATE BASE
(106) CONSTRUCT CURB & DIKE TRANSITIONS PER DETAILS ON SHEET 65
(110) CONSTRUCT MOUNTABLE TYPE "E" HOT MIX ASPHALT DIKE PER CALTRANS STD. A87B
(113) REMOVE, LEGALLY DISPOSE OF & REPLACE IN KIND INTERFERING PORTION OF EXISTING CONCRETE AS REQUIRED FOR CONSTRUCTION
(116) REMOVE & LEGALLY DISPOSE OF EXISTING AC PAVING, AC BERM & AC DIKE AS REQUIRED FOR CONSTRUCTION
(117) JOIN & MATCH EXISTING AC PAVING PER DETAIL ON SHEET 52
(129) EXISTING WATER VALVE – ADJUST TO GRADE
(126) REMOVE & RELOCATE FIRE HYDRANT

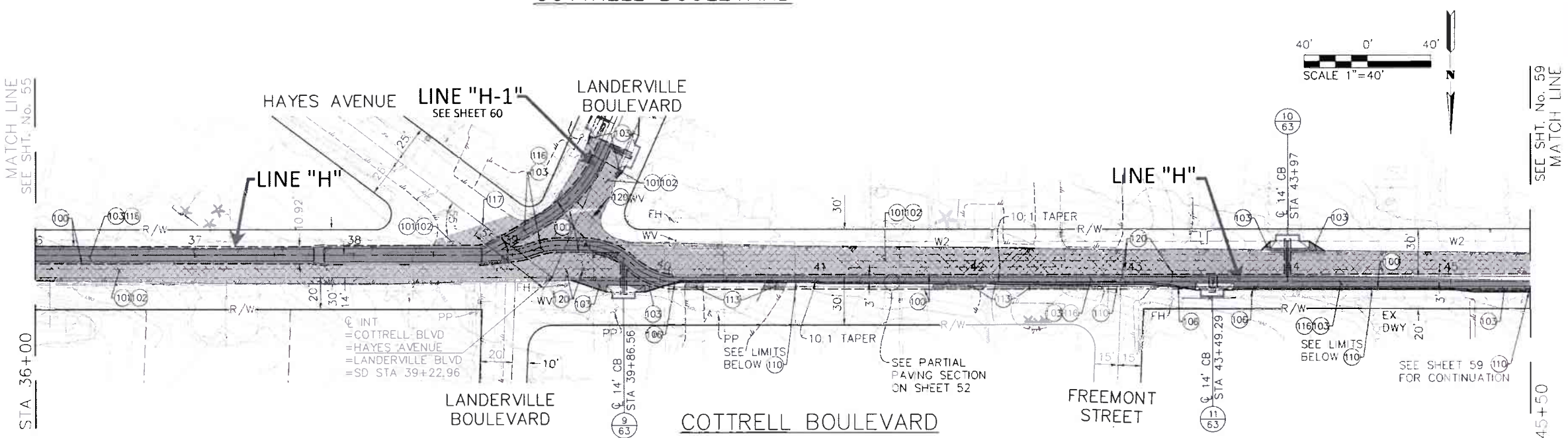

NOTE:
SEE SHEETS 63 & 64 "CATCH BASIN DETAILS" FOR BERM LENGTHS AND PAVEMENT DETAILS.

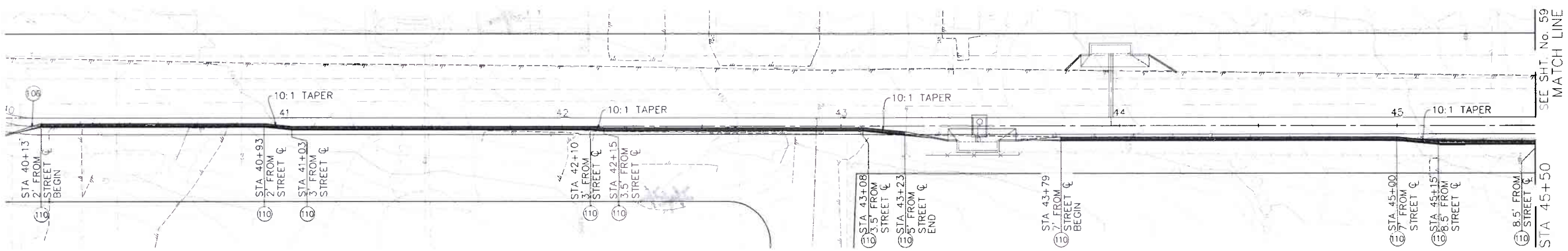

(110) LIMITS OF MOUNTABLE TYPE "E" DIKE

LEGEND

(110) INDICATES LIMITS OF MOUNTABLE TYPE "E" DIKE

CONSTRUCTION DRAWING SET DATED 22 JUNE, 2021

K&A Engineering, Inc.
ENGINEERING
LAND PLANNING
SURVEYING
357 N. SHERIDAN STREET
SUITE 117
CORONA, CALIFORNIA 92880
TEL. (951) 279-1800
FAX (951) 279-4380

REGISTERED PROFESSIONAL ENGINEER DONALD W. BERGH No. 28949 CIVIL STATE OF CALIFORNIA

Donald Bergh 8/16/2021
ENGINEER R.C.E. 28949 DATE

COUNTY FILE No. 970-B
COUNTY OF RIVERSIDE TRANSPOTATION DEPARTMENT
RECMD. COUNTY OVERSIGHT ENGINEER 8/11/21
APPROVES AS TO COMPLIANCE WITH APPLICABLE COUNTY STANDARDS AND PRACTICES
REGISTRATION # 76450 DATE SIGNED

Don't Dig...Until You Call U.S.A. Toll Free DIAL 811 for the location of buried utility lines. Don't disrupt vital services.
TWO WORKING DAYS BEFORE YOU DIG

BENCH MARK
NAD83 Epoch 2011, CCS83, ZONE 6-NAVD88(CORS88)
RCFC B.M. Z 15502
SET MAG NAIL W/ RCFC WCD TAG FLUSH
E 6,226,565.52 N 2,177,350.50
ELEV: 1,401.46 SURVEY DATE: 02/2013

REF	DESCRIPTION	APPR.	DATE
	REVISIONS		

RIVERSIDE COUNTY FLOOD CONTROL AND WATER CONSERVATION DISTRICT
DESIGNED BY: K&A ENGINEERING
DRAWN BY: ADA
DATE DRAWN: JUNE 2021
P8 NUMBER: 226078
RECOMMENDED FOR APPROVAL BY: DATE 7-27-2021
APPROVED BY: DATE 8/4/2021

LAKELAND VILLAGE MDP
PAVEMENT REPLACEMENT PLAN
COTTRELL BOULEVARD

PROJECT NO. 3-0-00020
DRAWING NO. 3-0207
SHEET NO. 58 OF 65

COTTRELL BLVD & COLEMAN AVE

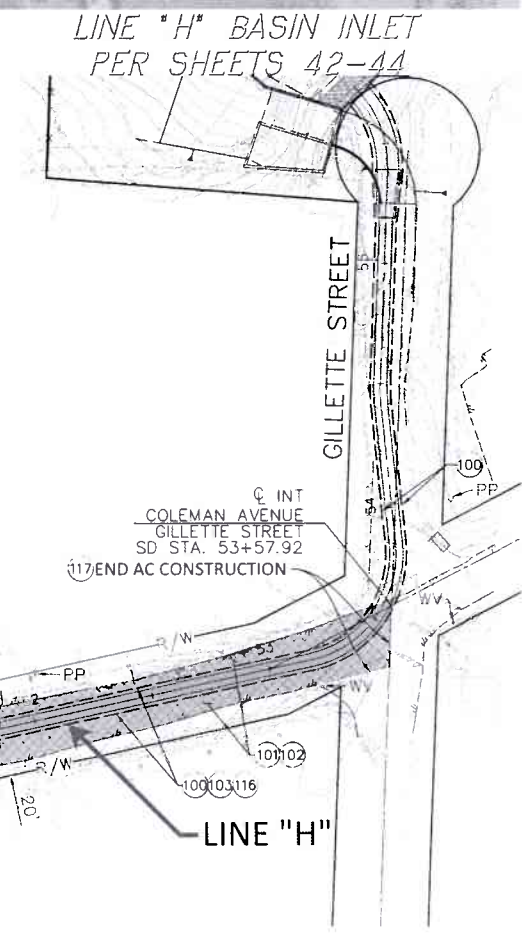

LEGEND

(110) INDICATES LIMITS OF MOUNTABLE TYPE "E" DIKE

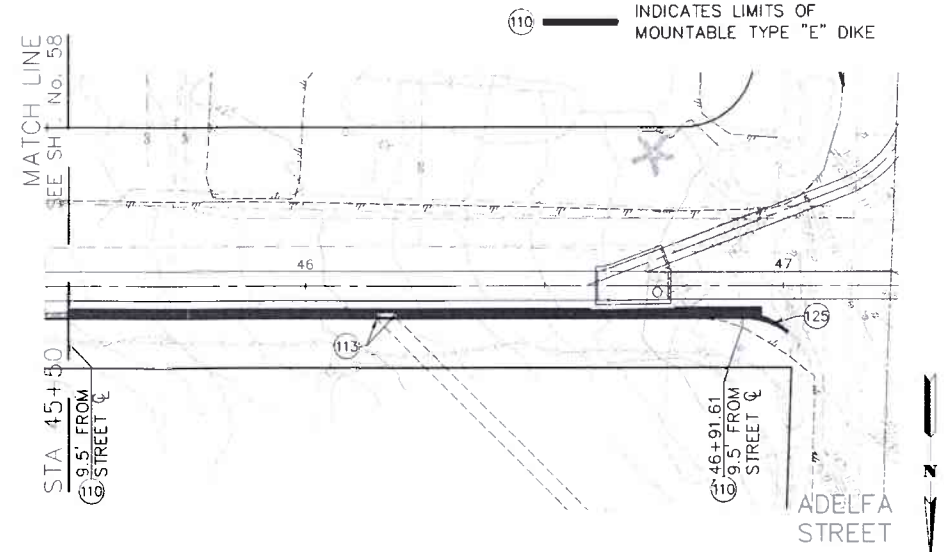

(110) LIMITS OF MOUNTABLE TYPE "E" DIKE

LEGEND

- (100) TRENCH BOUNDARY
- (103) INDICATES CONSTRUCT 3" HMA. PAVING OVER 6" BASE
- (101)(102) INDICATES GRIND AND OVERLAY WITH 0.12' HMA CAP
- (115) REMOVE & DISPOSE OF EXISTING CONCRETE
- (113) REMOVE & REPLACE EXISTING CONCRETE
- PROPOSED CATCH BASIN
- PROPOSED STORM DRAIN PIPE AND MANHOLE
- (7/33) INDICATES CATCH BASIN NO. INDICATES SHEET NO.

PAVEMENT NOTES

(100) CONSTRUCT TRENCH PER RCFC&WCD STD. M815

(101) GRIND EXISTING ASPHALT CONCRETE TO DEPTH SHOWN

(102) PAVE WITH TYPE "A" HOT MIX ASPHALT

(103) CONSTRUCT 3" TYPE "A" HMA OVER 6" CLASS 2 AGGREGATE BASE

(106) CONSTRUCT CURB & DIKE TRANSITIONS PER DETAILS ON SHEET 65

(110) CONSTRUCT MOUNTABLE TYPE "E" HOT MIX ASPHALT DIKE PER CALTRANS STD. A87B

(113) REMOVE, LEGALLY DISPOSE OF & REPLACE IN KIND INTERFERING PORTION OF EXISTING CONCRETE AS REQUIRED FOR CONSTRUCTION

(115) REMOVE & LEGALLY DISPOSE OF EXISTING CONCRETE CURB, GUTTER, SIDEWALK, DRIVEWAY & MISC. CONCRETE, AS REQUIRED FOR CONSTRUCTION

(116) REMOVE & LEGALLY DISPOSE OF EXISTING AC PAVING, AC BERM & AC DIKE AS REQUIRED FOR CONSTRUCTION

(117) JOIN & MATCH EXISTING AC PAVING PER DETAIL ON SHEET 52

(120) EXISTING WATER VALVE – ADJUST TO GRADE

(125) CONSTRUCT TRANSITION TO MATCH & JOIN EXISTING BERM, CURB OR EXISTING SURFACE PER DETAILS ON SHEET 65

NOTE:
SEE SHEETS 63 & 64 "CATCH BASIN DETAILS" FOR BERM LENGTHS AND PAVEMENT DETAILS.

CONSTRUCTION DRAWING SET DATED 22 JUNE, 2021

K&A Engineering, Inc.
ENGINEERING
LAND PLANNING
SURVEYING
357 N. SHERIDAN STREET
SUITE 117
CORONA, CALIFORNIA 92880
TEL. (951) 279-1800
FAX (951) 279-4380

REGISTERED PROFESSIONAL ENGINEER DONALD W. BERGH No. 28949 CIVIL STATE OF CALIFORNIA

Donald Bergh 8/16/2021
ENGINEER R.C.E. 28949 DATE

COUNTY FILE No. 970-B
COUNTY OF RIVERSIDE
TRANSPOTATION DEPARTMENT
RECMD COUNTY OVERSIGHT ENGINEER 8/11/21
APPROVES AS TO COMPLIANCE WITH APPLICABLE COUNTY STANDARDS AND PRACTICES
REGISTRATION # 76450 DATE SIGNED

Don't Dig...Until You Call U.S.A. Toll Free
DIAL 811
for the location of buried utility lines.
Don't disrupt vital services.
TWO WORKING DAYS BEFORE YOU DIG

BENCH MARK
NAD83 Epoch 2011, CCS83, ZONE 6-
NAVD88(CDH88)
RCFC B.M. Z 15502
SET MAG NAIL W/ RCFC WCD TAG FLUSH
E 6,220,565.52 N 2,177,350.50
ELEV: 1,401.46 SURVEY DATE: 02/2013

REF.	DESCRIPTION	APPR.	DATE
	REVISIONS		

RIVERSIDE COUNTY FLOOD CONTROL AND WATER CONSERVATION DISTRICT
DESIGNED BY: K&A ENGINEERING
DRAWN BY: ADA
DATE DRAWN: JUNE 2021
P8 NUMBER: 226078
RECOMMENDED FOR APPROVAL BY: DATE 7-27-2021
APPROVED BY: DATE 8/4/2021

LAKELAND VILLAGE MDP
PAVEMENT REPLACEMENT PLAN
COTTRELL BLVD & COLEMAN AVE

PROJECT NO. 3-0-00020
DRAWING NO. 3-0207
SHEET NO. 59 OF 65

LANDERVILLE BOULEVARD

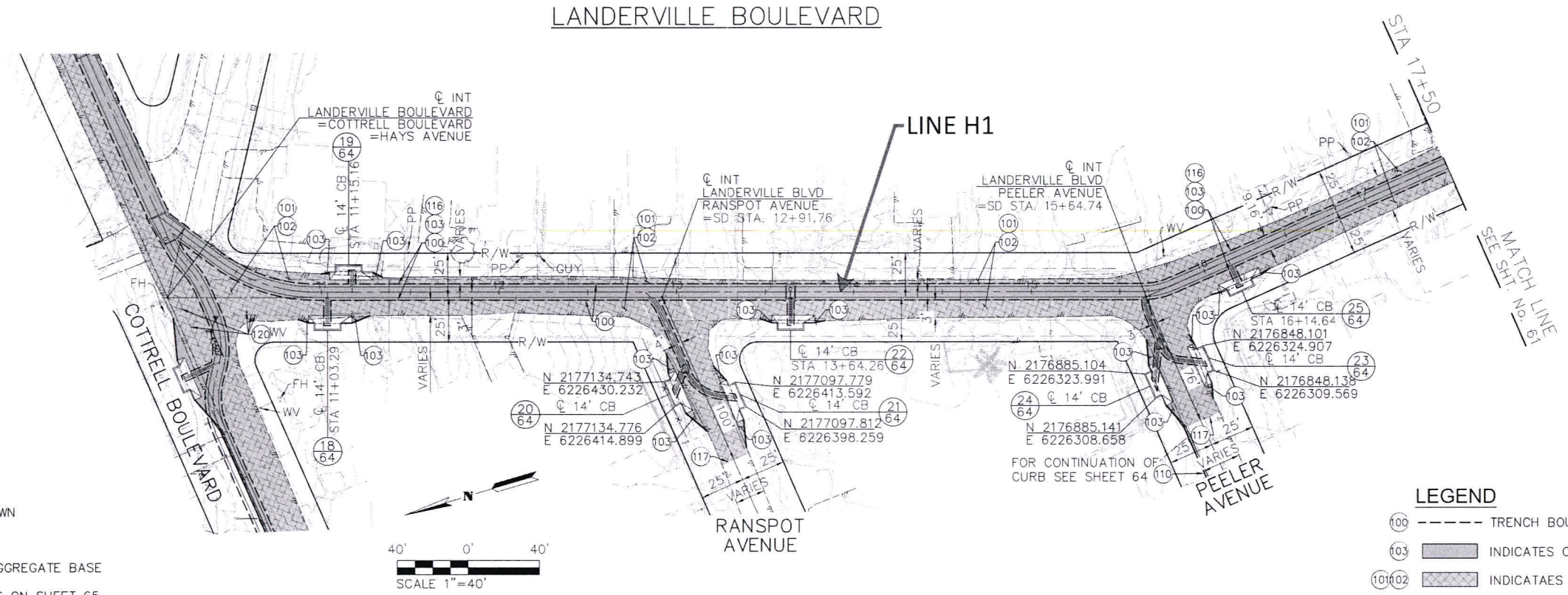

LANDERVILLE BOULEVARD

PAVEMENT NOTES

(100) CONSTRUCT TRENCH PER RCFC&WCD STD. M815

(101) GRIND EXISTING ASPHALT CONCRETE TO DEPTH SHOWN

(102) PAVE WITH TYPE "A" HOT MIX ASPHALT

(103) CONSTRUCT 3" TYPE "A" HMA OVER 6" CLASS 2 AGGREGATE BASE

(106) CONSTRUCT CURB & DIKE TRANSITIONS PER DETAILS ON SHEET 65

(110) CONSTRUCT MOUNTABLE TYPE "E" HOT MIX ASPHALT DIKE PER CALTRANS STD. A87B

(116) REMOVE & LEGALLY DISPOSE OF EXISTING AC PAVING, AC BERM & AC DIKE AS REQUIRED FOR CONSTRUCTION

(117) JOIN & MATCH EXISTING AC PAVING PER DETAIL ON SHEET 52

(120) EXISTING WATER VALVE – ADJUST TO GRADE

LEGEND

(100) ----- TRENCH BOUNDARY

(103) INDICATES CONSTRUCT 3" HMA. PAVING OVER 6" BASE

(101)(102) INDICATAES GRIND AND OVERLAY WITH 0.12' HMA CAP

(115) REMOVE & DISPOSE OF EXISTING CONCRETE

(113) REMOVE & REPLACE EXISTING CONCRETE

PROPOSED CATCH BASIN

PROPOSED STORM DRAIN PIPE AND MANHOLE

(7/33) INDICATES CATCH BASIN NO. INDICATES SHEET NO.

NOTE:
SEE SHEETS 63 & 64 "CATCH BASIN DETAILS" FOR BERM LENGTHS AND PAVEMENT DETAILS.

CONSTRUCTION DRAWING SET DATED 22 JUNE, 2021

K&A Engineering, Inc.
ENGINEERING
LAND PLANNING
SURVEYING
357 N. SHERIDAN STREET
SUITE 117
CORONA, CALIFORNIA 92880
TEL. (951) 279-1800
FAX (951) 279-4380

REGISTERED PROFESSIONAL ENGINEER DONALD W. BERGH No. 28949 CIVIL STATE OF CALIFORNIA

Donald Bergh 8/16/2021
ENGINEER R.C.E. 28949 DATE:

COUNTY FILE No. 970-B

COUNTY OF RIVERSIDE
TRANSPOTATION DEPARTMENT
RECMD COUNTY OVERSIGHT ENGINEER 8/11/21
APPROVES AS TO COMPLIANCE WITH APPLICABLE COUNTY STANDARDS AND PRACTICES.
REGISTRATION # 76450 DATE SIGNED

Don't Dig...Until You Call U.S.A. Toll Free
DIAL 811
for the location of buried utility lines.
Don't disrupt vital services.
TWO WORKING DAYS BEFORE YOU DIG

BENCH MARK
NAD83 Epoch 2011, CCS83, ZONE 6-
NAVD88(CORH88)
RCFC B.M. Z 15502
SET MAG NAIL W/ RCFC WCD TAG FLUSH
E 6,226,565.52 N 2,177,350.50
ELEV.: 1,401.46 SURVEY DATE: 02/2013

REF.	DESCRIPTION	APPR.	DATE
	REVISIONS		

RIVERSIDE COUNTY FLOOD CONTROL AND WATER CONSERVATION DISTRICT

DESIGNED BY: K&A ENGINEERING
DRAWN BY: ADA
DATE DRAWN: JUNE 2021
P8 NUMBER: 226078

RECOMMENDED FOR APPROVAL BY: DATE: 7-27-2021
APPROVED BY: DATE: 8/4/2021

LAKELAND VILLAGE MDP
LINE H1
PAVEMENT REPLACEMENT PLAN
LANDERVILLE BOULEVARD

PROJECT NO. 3-0-00020
DRAWING NO. 3-0207
SHEET NO. 60 OF 65

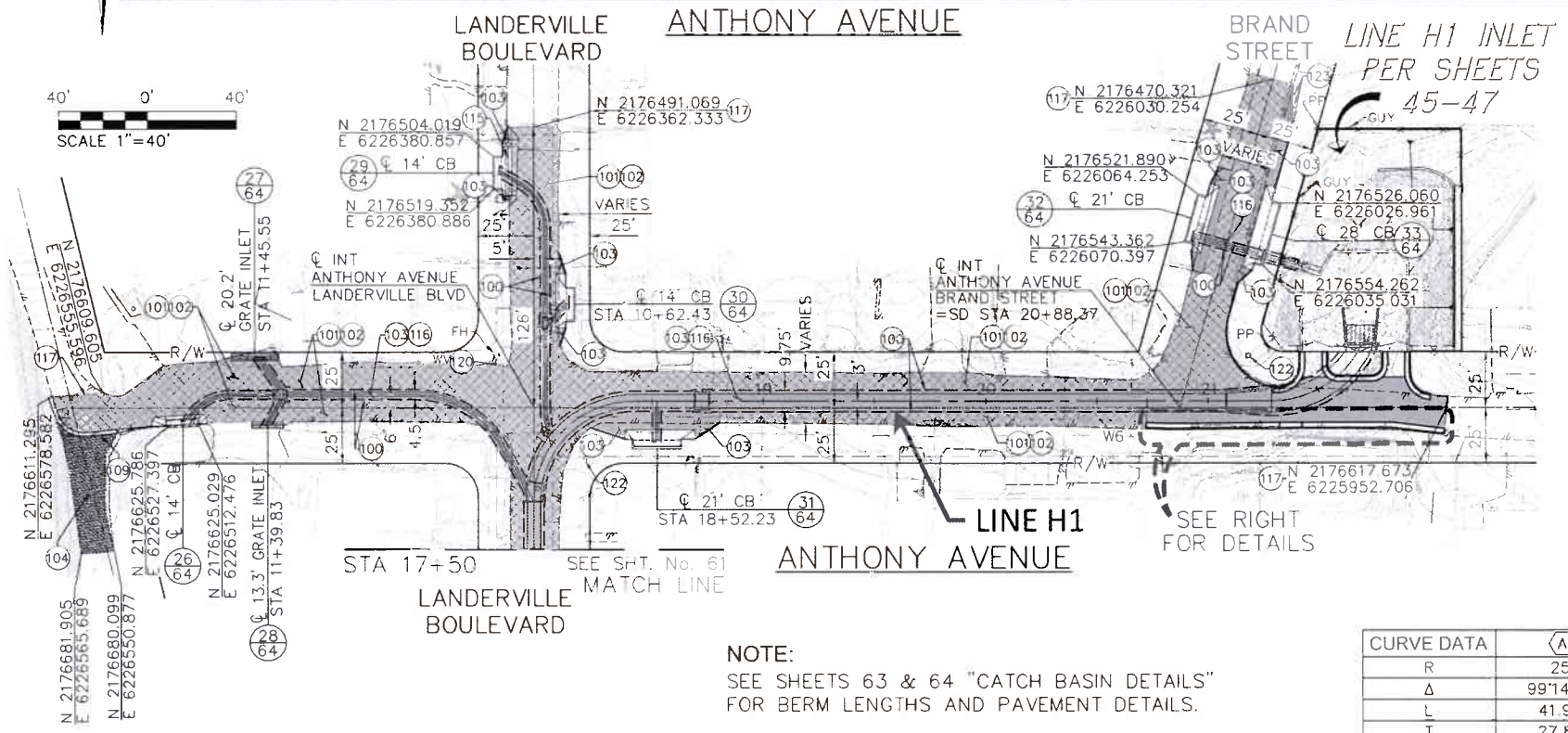

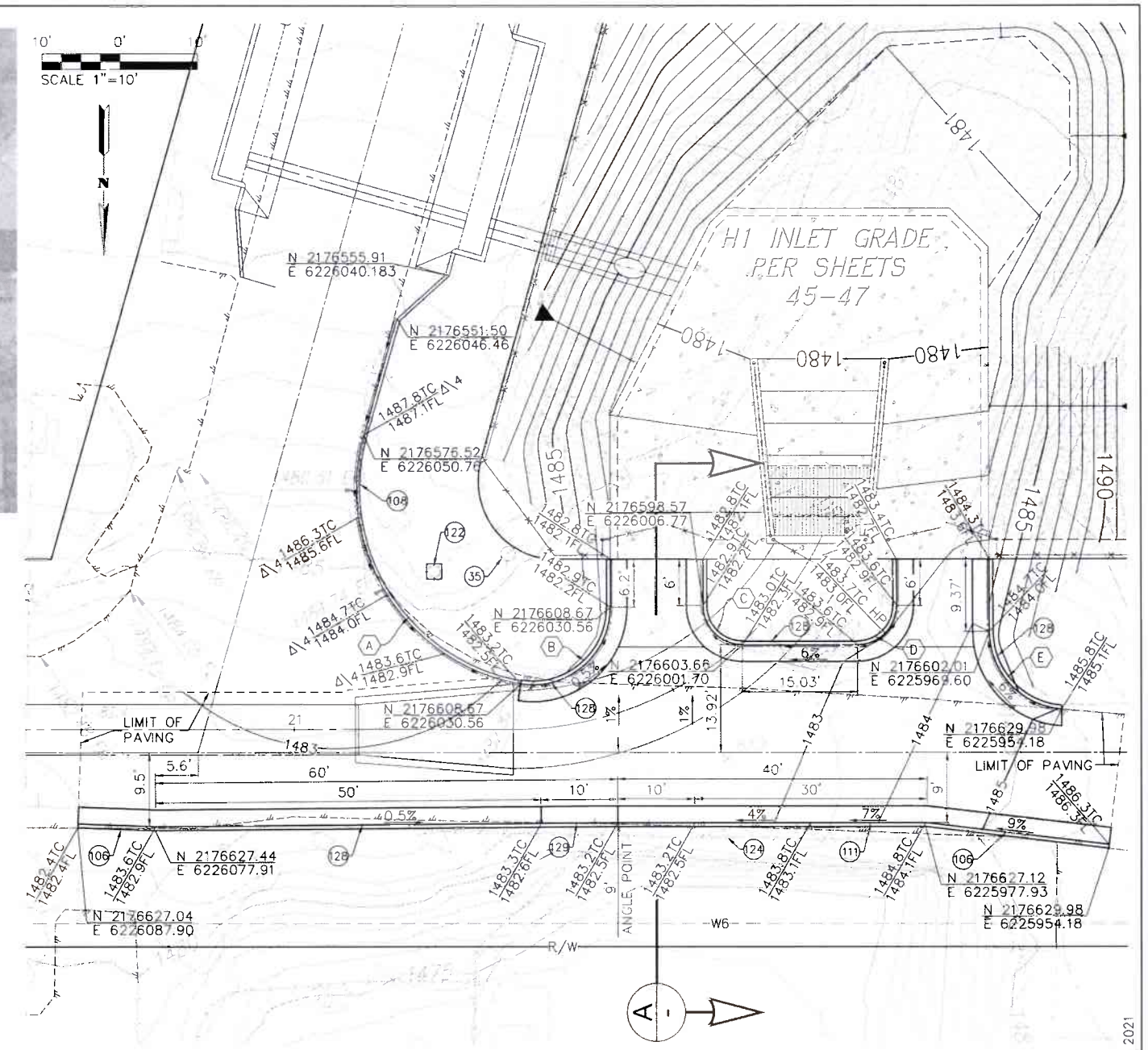

NOTE:
SEE SHEETS 63 & 64 "CATCH BASIN DETAILS" FOR BERM LENGTHS AND PAVEMENT DETAILS.

CURVE DATA		(A)	(B)	(C)	(D)	(E)
R		25'	9.58'	4.58'	4.58'	9.58'
Δ		99°14'11"	99°36'50"	90°00'35"	90°06'37"	85°31'45"
L		41.99'	16.66'	7.20'	7.20'	14.30'
T		27.88'	11.34'	4.58'	4.59'	8.86'
P.I.	NORTHING	2176603.46	2176610.68	2176603.15	2176503.20	2176610.87
	EASTING	6226057.95	6226018.80	6226006.28	6225982.08	6225969.11

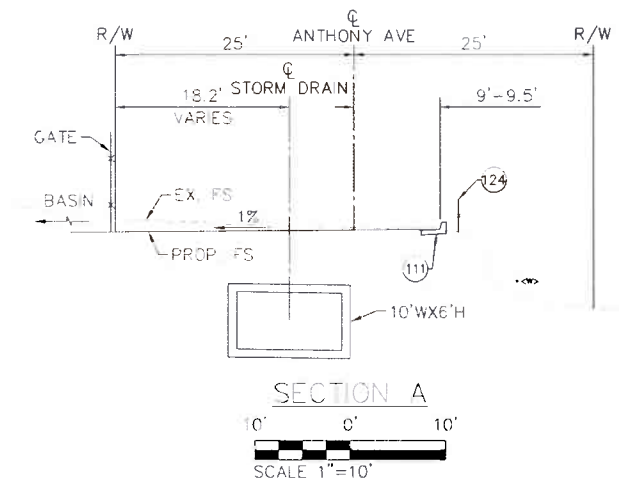

LEGEND

- (100) TRENCH BOUNDARY
- (103) INDICATES CONSTRUCT 3" HMA. PAVING OVER 6" BASE
- (101)(102) INDICATAES GRIND AND OVERLAY WITH 0.12' HMA CAP
- (115) REMOVE & DISPOSE OF EXISTING CONCRETE
- (113) REMOVE & REPLACE EXISTING CONCRETE
- PROPOSED CATCH BASIN
- PROPOSED STORM DRAIN PIPE AND MANHOLE
- (7/33) INDICATES CATCH BASIN NO. INDICATES SHEET NO.

PAVEMENT NOTES

(35) PROTECT IN PLACE
(100) CONSTRUCT TRENCH PER RCFC&WCD STD. M815
(101) GRIND EXISTING ASPHALT CONCRETE TO DEPTH SHOWN
(102) PAVE WITH TYPE "A" HOT MIX ASPHALT
(103) CONSTRUCT 3" TYPE "A" HMA OVER 6" CLASS 2 AGGREGATE BASE
(104) CONSTRUCT MIN 3" AGGREGATE BASE OVER NATIVE
(106) CONSTRUCT CURB & DIKE TRANSITIONS PER DETAILS ON SHEET 65
(108) CONSTRUCT 8" AC DIKE PER RCTD STD. NO. 212
(109) CONSTRUCT TYPE "E" CURB PER CALTRANS STD. A87A
(111) CONSTRUCT TYPE "A-8" CURB WITH REVERSED GUTTER PER RCTD STD. NO. 201 & DETAIL ON SHEET 65
(115) REMOVE & LEGALLY DISPOSE OF EXISTING CONCRETE CURB, GUTTER, SIDEWALK, DRIVEWAY & MISC. CONCRETE, AS REQUIRED FOR CONSTRUCTION
(116) REMOVE & LEGALLY DISPOSE OF EXISTING AC PAVING, AC BERM & AC DIKE AS REQUIRED FOR CONSTRUCTION
(117) JOIN & MATCH EXISTING AC PAVING PER DETAIL ON SHEET 52
(120) EXISTING WATER VALVE - ADJUST TO GRADE
(122) PROTECT & TEMPORARILY SUPPORT IN PLACE HISTORIC LIGHT POLE
(123) INSTALL DELINEATOR PER CALTRANS STD. A73C CLASS 1 "TYPE F"
(124) REMOVE & REPLACE BARRICADE PER RCTD STD. NO. 810
(126) CONSTRUCT TYPE "A-8" CURB & GUTTER PER RCTD STD. NO. 201
(129) CONSTRUCT TRANSITION FROM TYPE "A-8" CURB & GUTTER TO TYPE "A-8" CURB WITH REVERSED GUTTER PER DETAIL ON SHEET 65

CONSTRUCTION DRAWING SET DATED 22 JUNE, 2021

K&A Engineering, Inc.
ENGINEERING
LAND PLANNING
SURVEYING
357 N. SHERIDAN STREET
SUITE 117
CORONA, CALIFORNIA 92880
TEL. (951) 279-1800
FAX (951) 279-4380

REGISTERED PROFESSIONAL ENGINEER DONALD W. BERGH No. 28949 CIVIL STATE OF CALIFORNIA

Donald Bergh 8/16/2021
ENGINEER R.C.E. 28949 DATE

COUNTY FILE No. 970-B

COUNTY OF RIVERSIDE
TRANSPOTATION DEPARTMENT
RECMD COUNTY OVERSIGHT ENGINEER 8/11/21
APPROVES AS TO COMPLIANCE WITH APPLICABLE COUNTY STANDARDS AND PRACTICES
REGISTRATION # 76450 DATE SIGNED

Don't Dig...Until You Call U.S.A. Toll Free
DIAL 811
for the location of buried utility lines.
Don't disrupt vital services.
BURIED CABLE
TWO WORKING DAYS BEFORE YOU DIG

BENCH MARK
NAD83 Epoch 2011, CCS83, ZONE 6-NAVD88(CCH88)
RCFC B.M. Z 15502
SET MAG NAIL W/ RCFC WCD TAG FLUSH
E 6,226,565.52 N 2,177,350.50
ELEV: 1,401.46 SURVEY DATE 02/2013

REF	DESCRIPTION	APPR	DATE
	REVISIONS		

RIVERSIDE COUNTY FLOOD CONTROL AND WATER CONSERVATION DISTRICT
DESIGNED BY: K&A ENGINEERING
DRAWN BY: ADA
DATE DRAWN: JUNE 2021
PB NUMBER: 226078
RECOMMENDED FOR APPROVAL BY: DATE 7-27-2021
APPROVED BY: DATE 8/4/2021

LAKELAND VILLAGE MDP
LINE H1
PAVEMENT REPLACEMENT PLAN
ANTHONY AVENUE

PROJECT NO. 3-0-00020
DRAWING NO. 3-0207
SHEET NO. 61 OF 65

ADELFA STREET

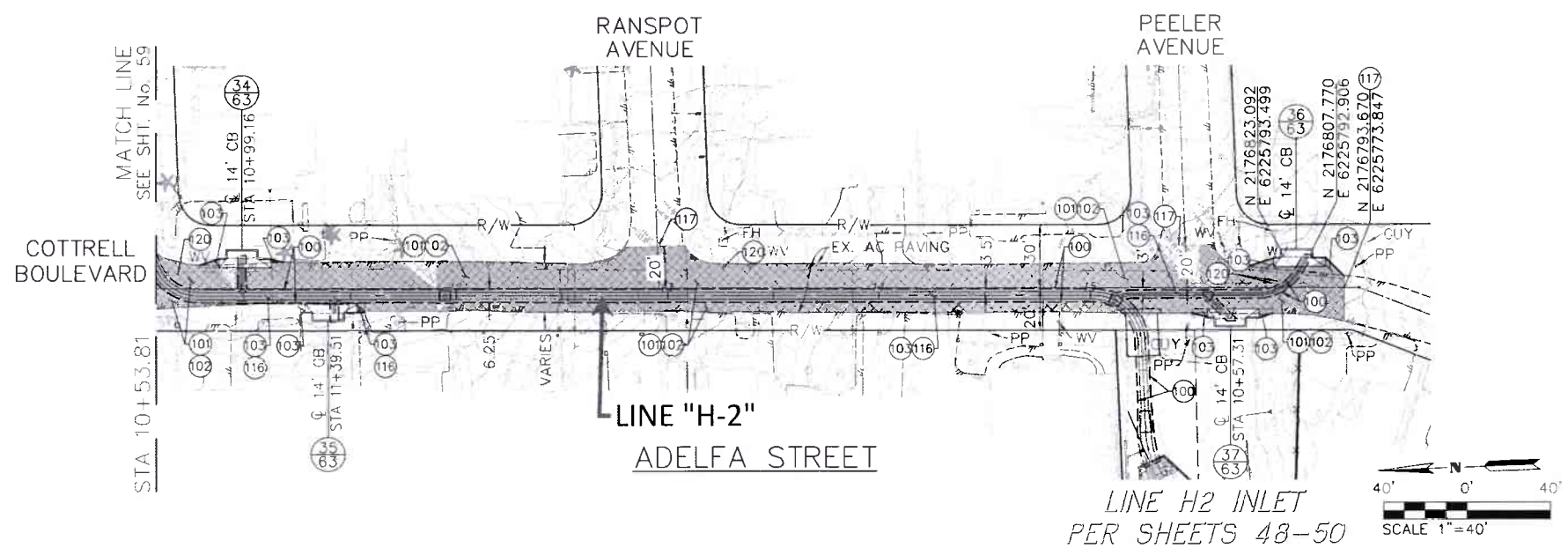

PAVEMENT NOTES

(100) CONSTRUCT TRENCH PER RCFC&WCD STD. M815

(101) GRIND EXISTING ASPHALT CONCRETE TO DEPTH SHOWN

(102) PAVE WITH TYPE "A" HOT MIX ASPHALT

(103) CONSTRUCT 3" TYPE "A" HMA OVER 6" CLASS 2 AGGREGATE BASE

(116) REMOVE & LEGALLY DISPOSE OF EXISTING AC PAVING, AC BERM & AC DIKE AS REQUIRED FOR CONSTRUCTION

(117) JOIN & MATCH EXISTING AC PAVING PER DETAIL ON SHEET 52

(120) EXISTING WATER VALVE – ADJUST TO GRADE

LEGEND

(100) ------ TRENCH BOUNDARY

(103) INDICATES CONSTRUCT 3" HMA. PAVING OVER 6" BASE

(101)(102) INDICATAES GRIND AND OVERLAY WITH 0.12' HMA CAP

(115) REMOVE & DISPOSE OF EXISTING CONCRETE

(113) REMOVE & REPLACE EXISTING CONCRETE

PROPOSED CATCH BASIN

PROPOSED STORM DRAIN PIPE AND MANHOLE

(7/33) INDICATES CATCH BASIN NO. INDICATES SHEET NO.

NOTE:
SEE SHEETS 63 & 64 "CATCH BASIN DETAILS" FOR BERM LENGTHS AND PAVEMENT DETAILS.

CONSTRUCTION DRAWING SET DATED 22 JUNE, 2021

K&A Engineering, Inc. — ENGINEERING, LAND PLANNING, SURVEYING — 357 N. SHERIDAN STREET, SUITE 117, CORONA, CALIFORNIA 92880, TEL (951) 279-1800, FAX (951) 279-4380

Donald Berg — 8/16/2021
ENGINEER R.C.E. 28949 DATE

REGISTERED PROFESSIONAL ENGINEER — DONALD W. BERG — No. 28949 — CIVIL — STATE OF CALIFORNIA

COUNTY FILE No. 970-B

COUNTY OF RIVERSIDE TRANSPOTATION DEPARTMENT
RECMD COUNTY OVERSIGHT ENGINEER 8/11/21
APPROVES AS TO COMPLIANCE WITH APPLICABLE COUNTY STANDARDS AND PRACTICES
REGISTRATION # 76450 DATE SIGNED

Don't Dig...Until You Call U.S.A. Toll Free DIAL 811 for the location of buried utility lines. Don't disrupt vital services.
TWO WORKING DAYS BEFORE YOU DIG

BENCH MARK
NAD83 Epoch 2011, CCS83, ZONE 6–NAVD88(CORS96)
RCFC B.M. Z 15502
SET MAG NAIL W/ RCFC WCD TAG FLUSH
E 6,226,565.52 N 2,177,350.50
ELEV: 1,401.46 SURVEY DATE: 02/2013

REF	DESCRIPTION	APPR	DATE
	REVISIONS		

RIVERSIDE COUNTY FLOOD CONTROL AND WATER CONSERVATION DISTRICT
DESIGNED BY K&A ENGINEERING
DRAWN BY: ADA
DATE DRAWN: JUNE 2021
P.B. NUMBER: 226078
RECOMMENDED FOR APPROVAL BY: DATE 7-27-2021
APPROVED BY: DATE 8/4/2021

LAKELAND VILLAGE MDP
PAVEMENT REPLACEMENT PLAN
ADELFA STREET

PROJECT NO. 3-0-00020
DRAWING NO. 3-0207
SHEET NO. 62 OF 65

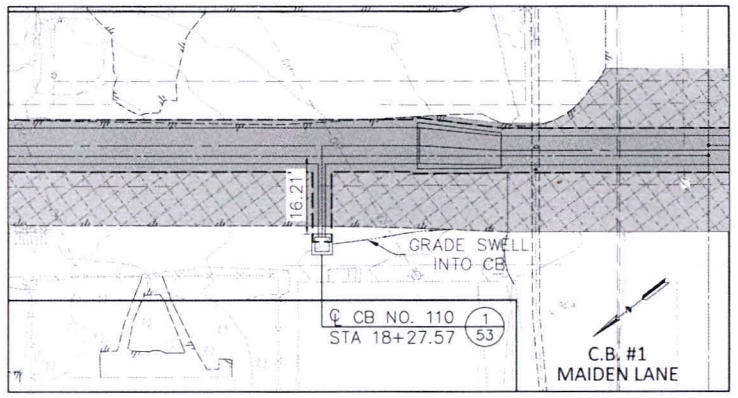

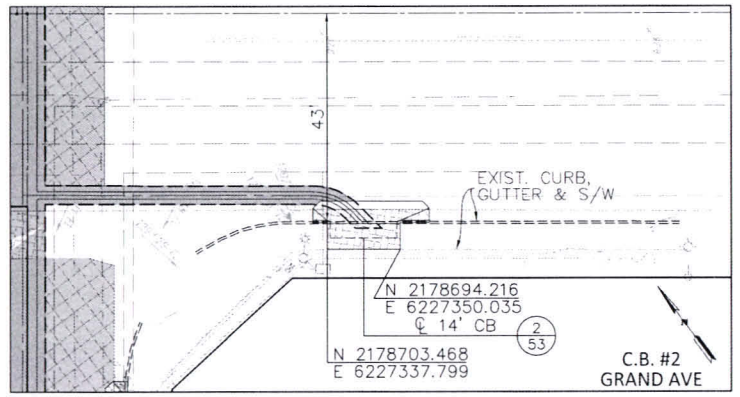

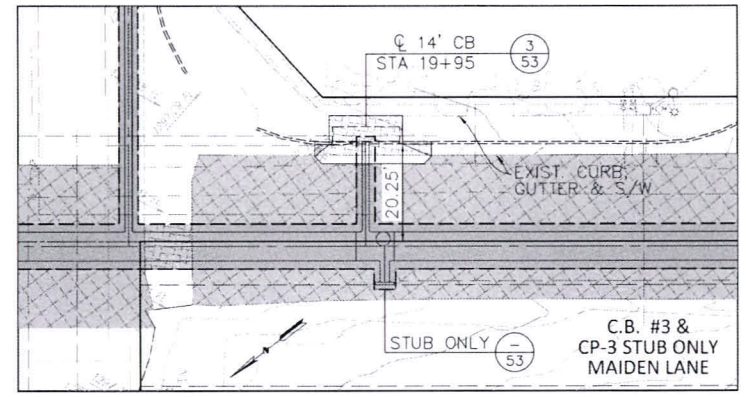

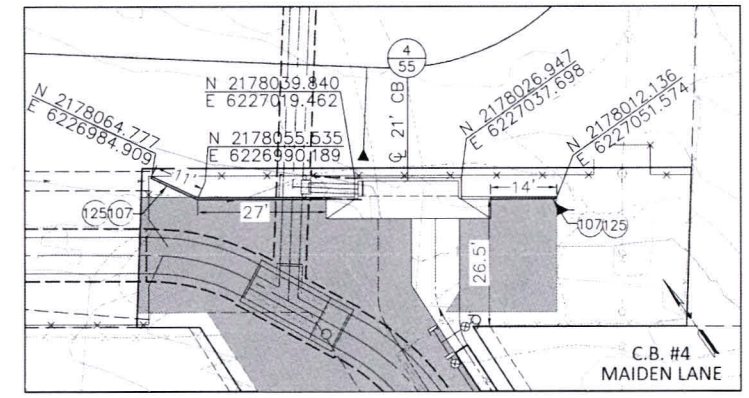

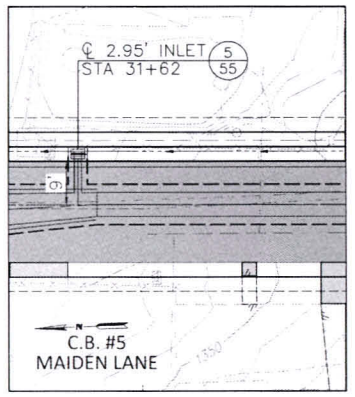

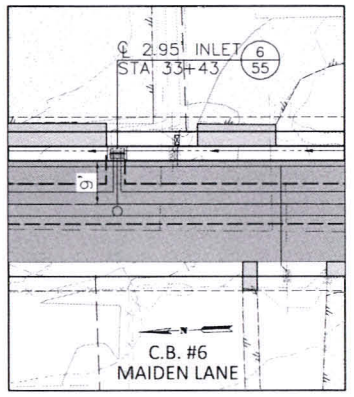

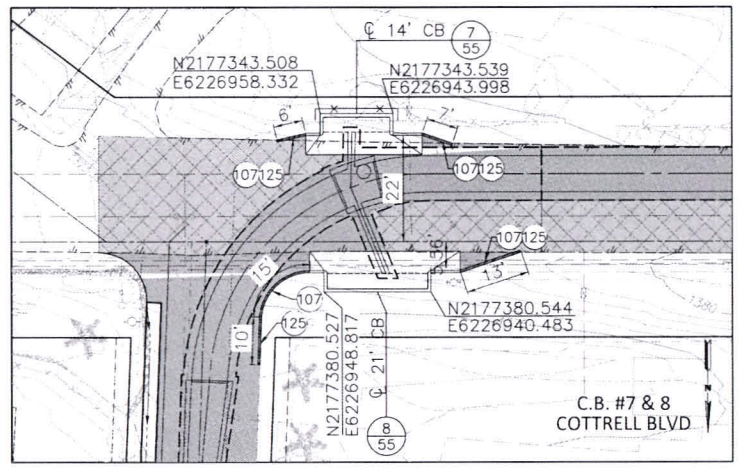

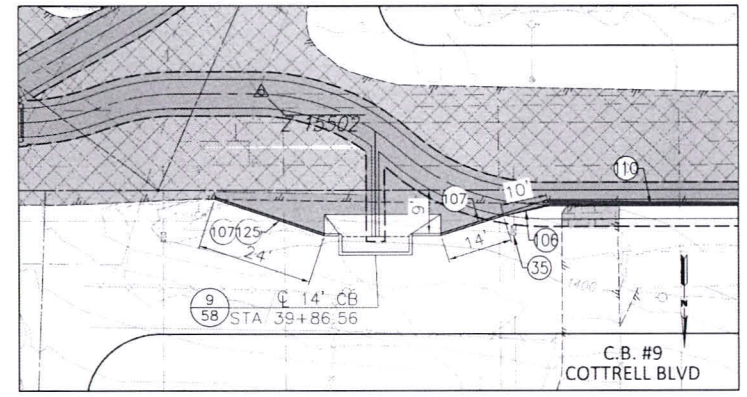

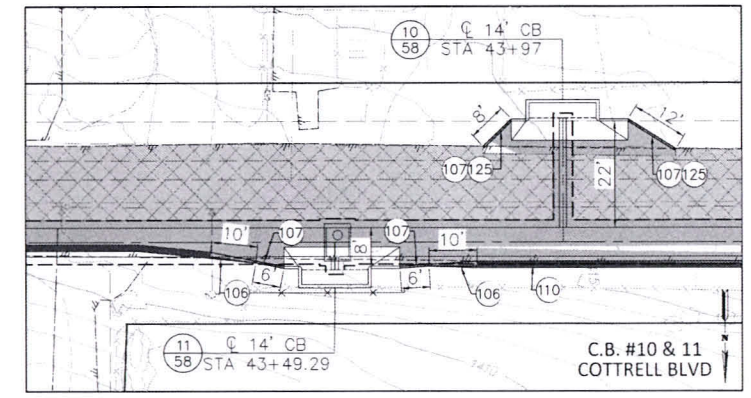

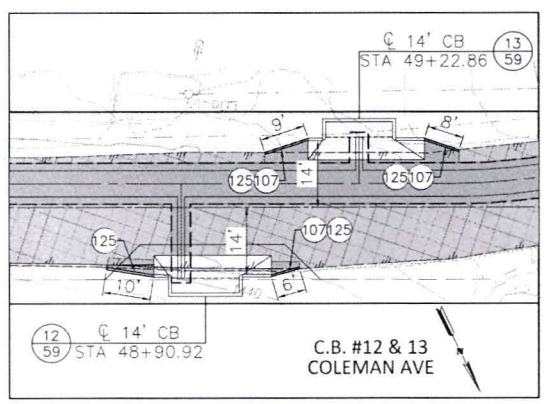

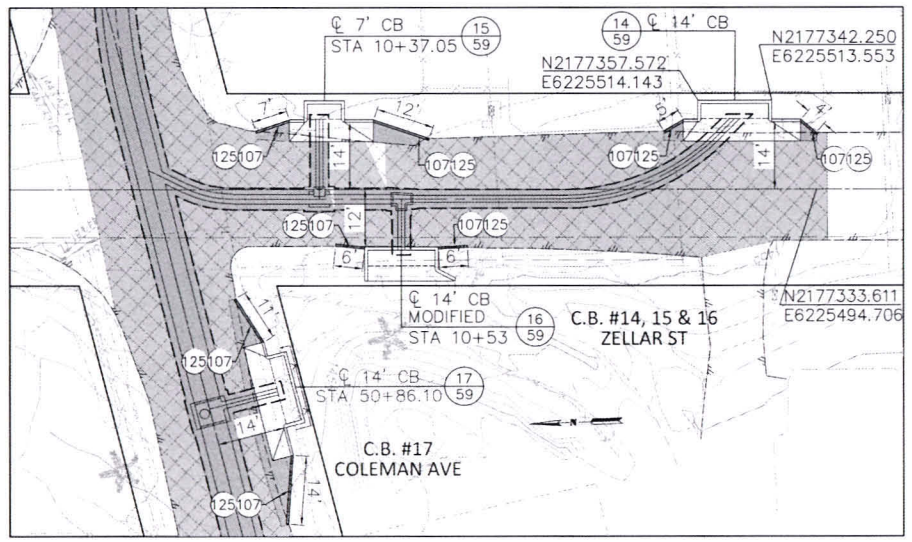

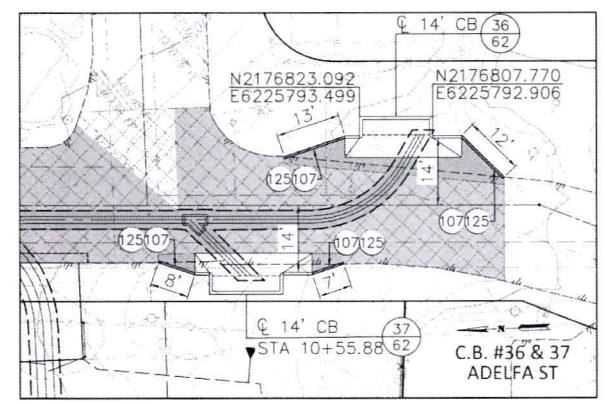

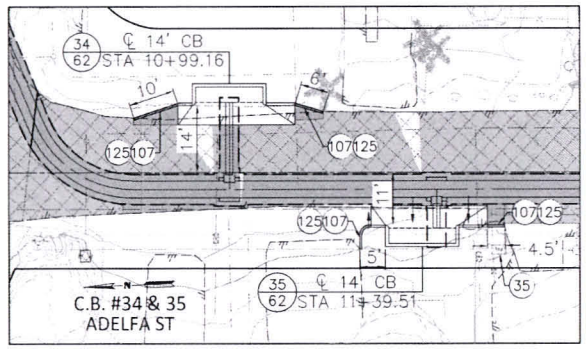

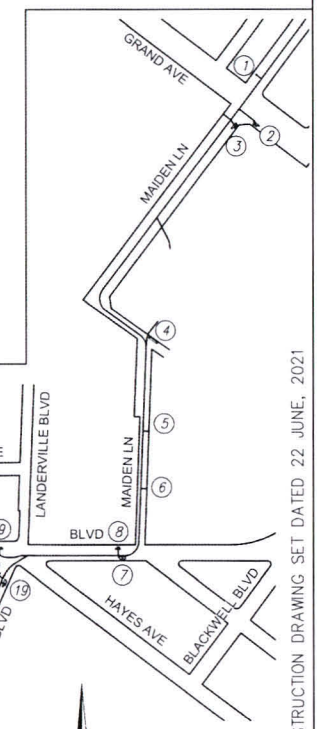

CONSTRUCTION DRAWING SET DATED 22 JUNE, 2021

LEGEND

- (100) ----- TRENCH BOUNDARY
- (103) INDICATES CONSTRUCT 3" HMA. PAVING OVER 6" BASE
- (101)(102) INDICATES GRIND AND OVERLAY WITH 0.12' HMA CAP
- (115) REMOVE & DISPOSE OF EXISTING CONCRETE
- (113) REMOVE & REPLACE EXISTING CONCRETE
- PROPOSED CATCH BASIN
- PROPOSED STORM DRAIN PIPE AND MANHOLE
- (7/33) INDICATES CATCH BASIN NO. / INDICATES SHEET NO.

PAVEMENT NOTES

(35) PROTECT IN PLACE

(106) CONSTRUCT CURB & DIKE TRANSITIONS PER DETAILS ON SHEET 65

(107) CONSTRUCT 6" AC DIKE PER RCTD STD. NO. 212

(110) CONSTRUCT MOUNTABLE TYPE "E" HOT MIX ASPHALT DIKE PER CALTRANS STD. A87B

(125) CONSTRUCT TRANSITION TO MATCH & JOIN EXISTING BERM, CURB OR EXISTING SURFACE PER DETAILS ON SHEET 65

CATCH BASIN DETAILS

SCALE: 1"=20'

K&A Engineering, Inc.
ENGINEERING
LAND PLANNING
SURVEYING
357 N. SHERIDAN STREET
SUITE 117
CORONA, CALIFORNIA 92880
TEL. (951) 279-1800
FAX (951) 279-4380

REGISTERED PROFESSIONAL ENGINEER DONALD W. BERGER No. 28949 CIVIL STATE OF CALIFORNIA

Donald Berger 8/16/2021

ENGINEER R.C.E. 28949 DATE:

COUNTY FILE No. 970-B

COUNTY OF RIVERSIDE
TRANSPOTATION DEPARTMENT

RECMD COUNTY OVERSIGHT ENGINEER 8/11/21

APPROVES AS TO COMPLIANCE WITH APPLICABLE COUNTY STANDARDS AND PRACTICES.

REGISTRATION # 76450 DATE SIGNED

Don't Dig...Until You Call U.S.A. Toll Free
DIAL 811
for the location of buried utility lines.
Don't disrupt vital services.

BURIED CABLE

TWO WORKING DAYS BEFORE YOU DIG

BENCH MARK
NAD83 Epoch 2011, CCS83, ZONE 6-
NAVD88(CORS88)

RCFC B.M. Z 15502
SET MAG NAIL W/ RCFC WCD TAG FLUSH

E 6,226,565.52 N 2,177,350.50

ELEV.: 1,401.46 SURVEY DATE: 02/2013

REF	DESCRIPTION	APPR	DATE
	REVISIONS		

RIVERSIDE COUNTY FLOOD CONTROL AND WATER CONSERVATION DISTRICT

DESIGNED BY: K&A ENGINEERING
DRAWN BY: ADA
DATE DRAWN: JUNE 2021
PB NUMBER: 226078

RECOMMENDED FOR APPROVAL BY: DATE 7-27-2021

APPROVED BY: DATE 8/4/2021

LAKELAND VILLAGE MDP
LINE H & H2
PAVEMENT REPLACEMENT PLAN
CATCH BASIN DETAILS

PROJECT NO. 3-0-00020
DRAWING NO. 3-0207
SHEET NO. 63 OF 65

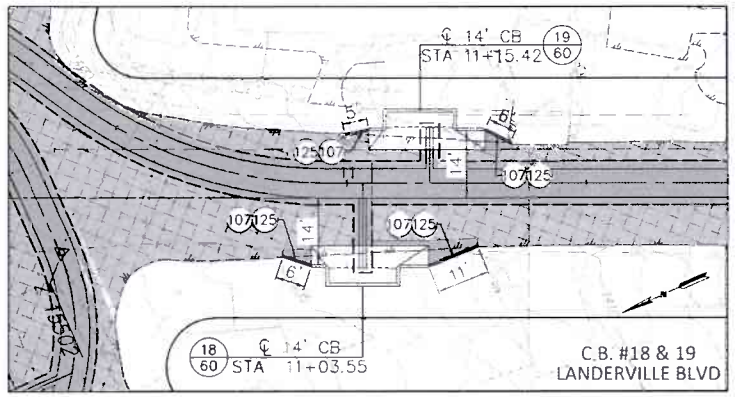

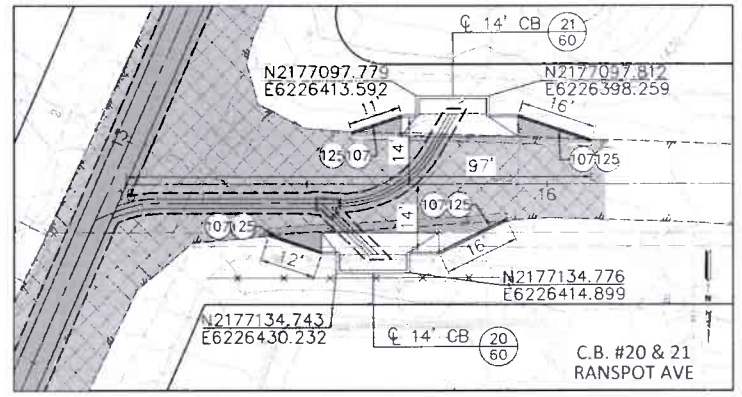

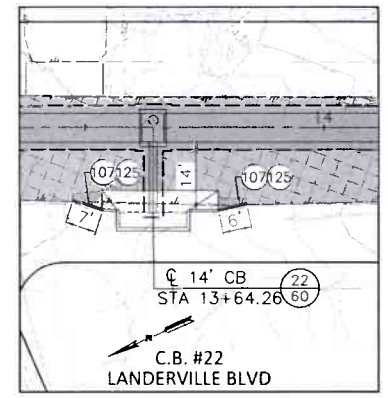

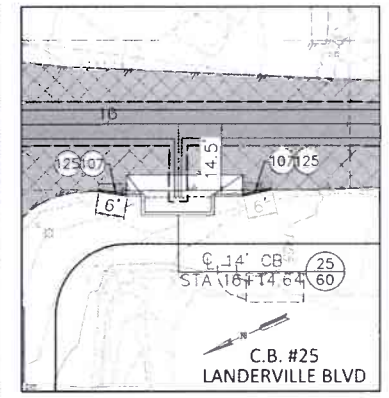

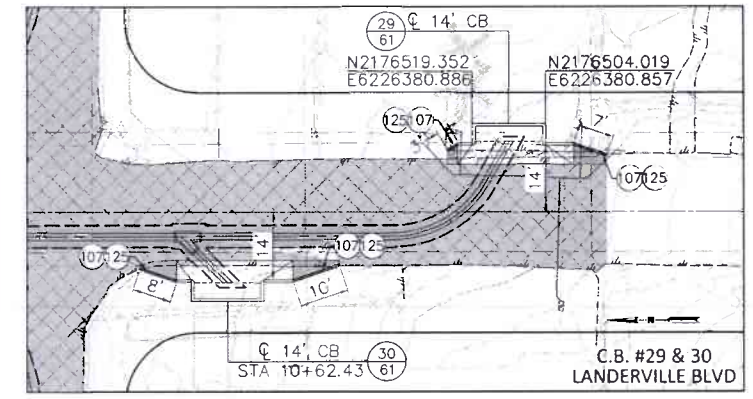

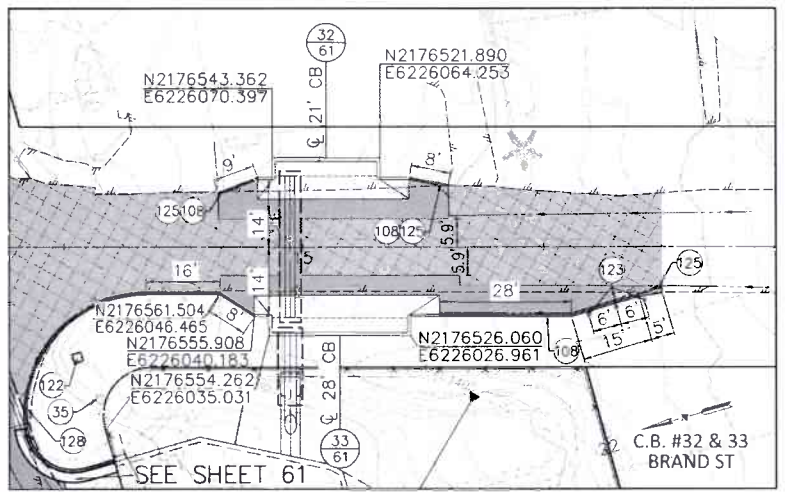

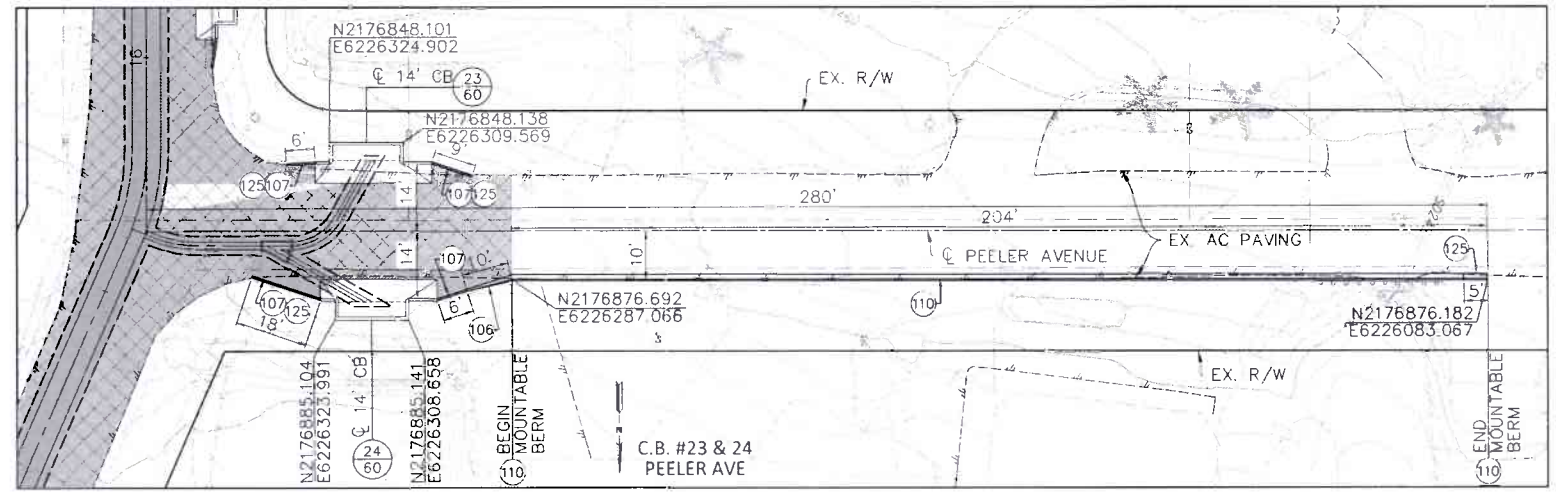

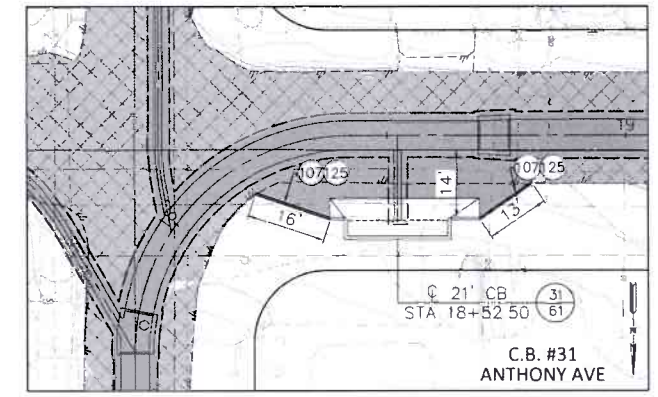

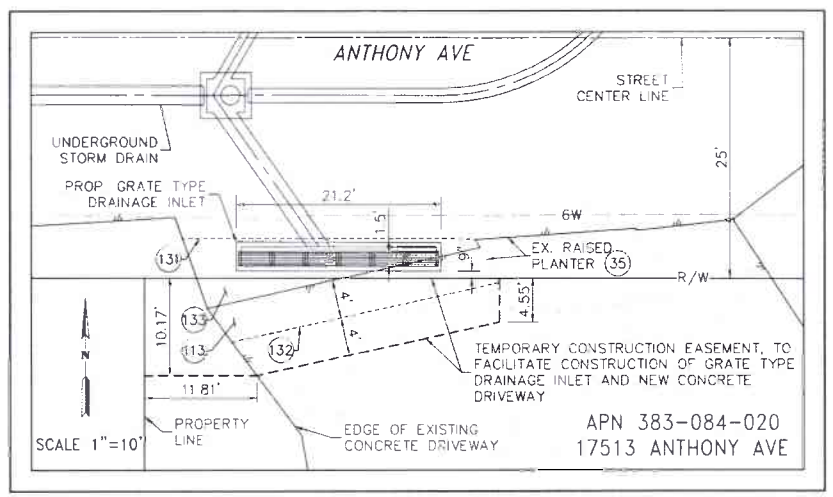

CB #27 EXISTING DRIVEWAY JOIN DETAIL

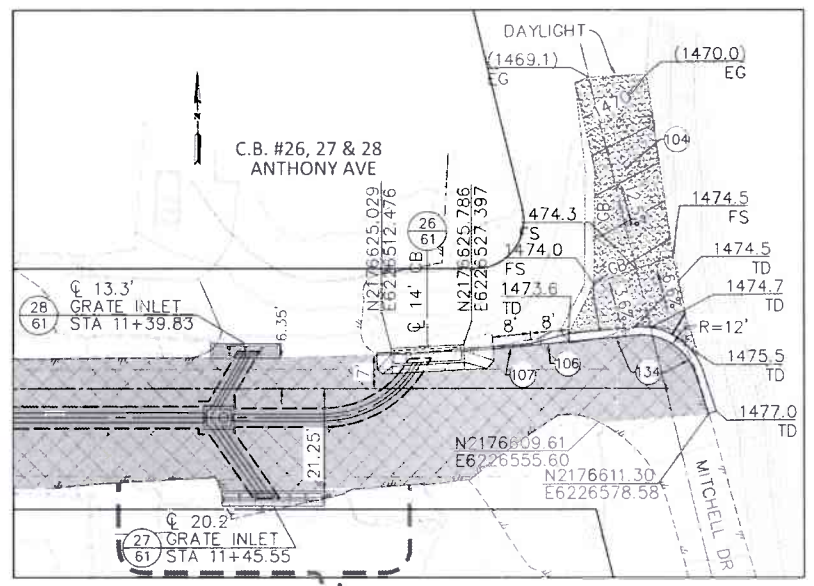

PAVEMENT NOTES

(35) PROTECT IN PLACE

(104) CONSTRUCT MIN 3" AGGREGATE BASE OVER NATIVE

(106) CONSTRUCT CURB & DIKE TRANSITIONS PER DETAILS ON SHEET 65

(107) CONSTRUCT 6" AC DIKE PER RCTD STD. NO. 212

(108) CONSTRUCT 8" AC DIKE PER RCTD STD. NO. 212

(110) CONSTRUCT MOUNTABLE TYPE "E" HOT MIX ASPHALT DIKE PER CALTRANS STD. A87B

(113) REMOVE, LEGALLY DISPOSE OF & REPLACE IN KIND INTERFERING PORTION OF EXISTING CONCRETE AS REQUIRED FOR CONSTRUCTION

(122) PROTECT & TEMPORARILY SUPPORT IN PLACE HISTORIC LIGHT POLE

(123) INSTALL DELINEATOR PER CALTRANS STD. A73C CLASS 1 "TYPE F"

(125) CONSTRUCT TRANSITION TO MATCH & JOIN EXISTING BERM, CURB OR EXISTING SURFACE PER DETAILS ON SHEET 65

(128) CONSTRUCT TYPE "A-8" CURB & GUTTER PER RCTD STD. NO. 201

(131) SAWCUT EXISTING ASPHALT PAVEMENT

(132) SAWCUT EXISTING CONCRETE

(133) CONSTRUCT CONCRETE DRIVEWAY

(134) CONSTRUCT TYPE "D" AC DIKE PER CALTRANS STD. A87B

LEGEND

(100) - - - - - TRENCH BOUNDARY

(103) INDICATES CONSTRUCT 3" HMA. PAVING OVER 6" BASE

(101)(102) INDICATES GRIND AND OVERLAY WITH 0.12' HMA CAP

(115) REMOVE & DISPOSE OF EXISTING CONCRETE

(113) REMOVE & REPLACE EXISTING CONCRETE

PROPOSED CONCRETE

EXISTING CONCRETE

PROPOSED CATCH BASIN

PROPOSED STORM DRAIN PIPE AND MANHOLE

(7/33) INDICATES CATCH BASIN NO. INDICATES SHEET NO.

CATCH BASIN DETAILS

SCALE: 1"=20'

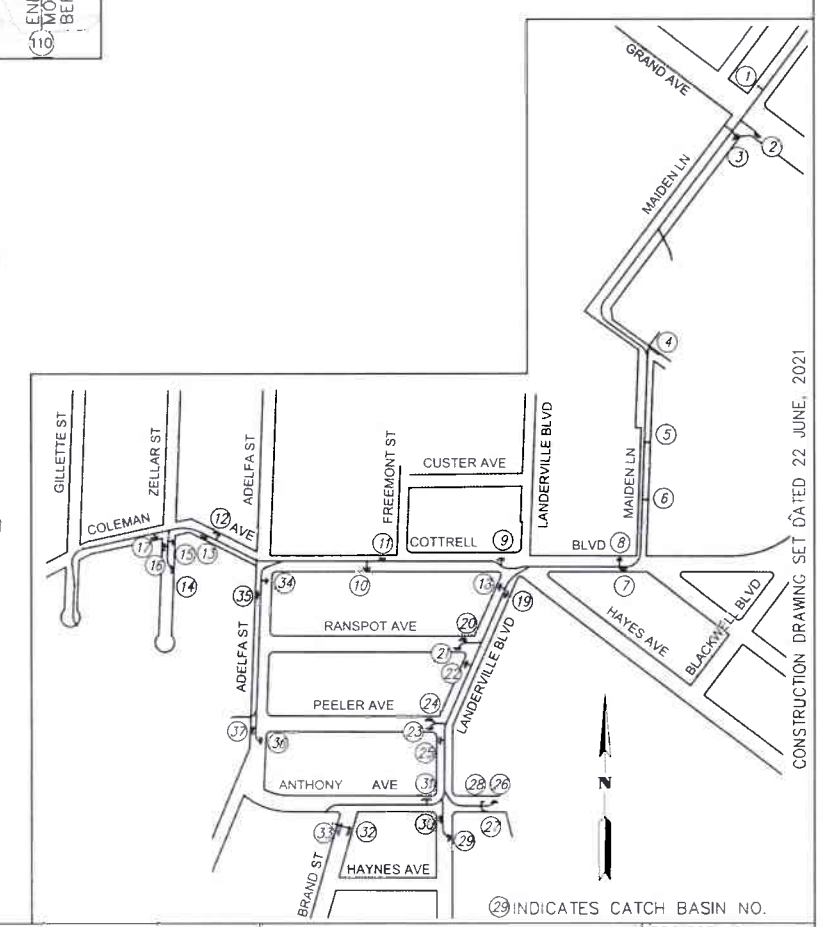

CONSTRUCTION DRAWING SET DATED 22 JUNE, 2021

K&A ENGINEERING LAND PLANNING SURVEYING
Engineering, Inc.
357 N. SHERIDAN STREET
SUITE 117
CORONA, CALIFORNIA 92880
TEL (951) 279-1800
FAX (951) 279-4380

REGISTERED PROFESSIONAL ENGINEER DONALD W. BERSH No. 28949 CIVIL STATE OF CALIFORNIA

8/16/2021
ENGINEER R.C.E. 28949 DATE

COUNTY FILE No. 970-B

COUNTY OF RIVERSIDE
TRANSPOTATION DEPARTMENT
RECMD COUNTY OVERSIGHT ENGINEER 8/11/21
APPROVES AS TO COMPLIANCE WITH APPLICABLE COUNTY STANDARDS AND PRACTICES
REGISTRATION # 76450 DATE SIGNED

Don't Dig...Until You Call U.S.A. Toll Free
DIAL 811
for the location of buried utility lines.
Don't disrupt vital services.
TWO WORKING DAYS BEFORE YOU DIG

BENCH MARK
NAD83 Epoch 2011, CCS83, ZONE 6-
NAVD88(CORS88)
RCFC B.M. Z 15502
SET MAG NAIL W/ RCFC WCD TAG FLUSH
E 6,226,565.52 N 2,177,350.50
ELEV: 1,401.46 SURVEY DATE: 02/2013

REF	REVISIONS	APPR	DATE

RIVERSIDE COUNTY FLOOD CONTROL AND WATER CONSERVATION DISTRICT

DESIGNED BY: K&A ENGINEERING
DRAWN BY: ADA
DATE DRAWN: JUNE 2021
PB NUMBER: 226078

RECOMMENDED FOR APPROVAL BY: DATE 7-27-2021
APPROVED BY: DATE 8/4/2021

LAKELAND VILLAGE MDP
LINE H1
PAVEMENT
REPLACEMENT PLAN
CATCH BASIN DETAILS

PROJECT NO 3-0-00020
DRAWING NO 3-0207
SHEET NO. 64 OF 65

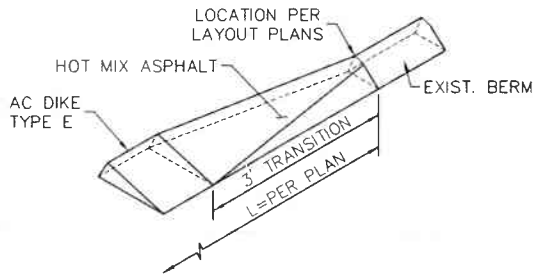

TYPE "E" DIKE TRANSITION TO EXISTING BERM
N.T.S.

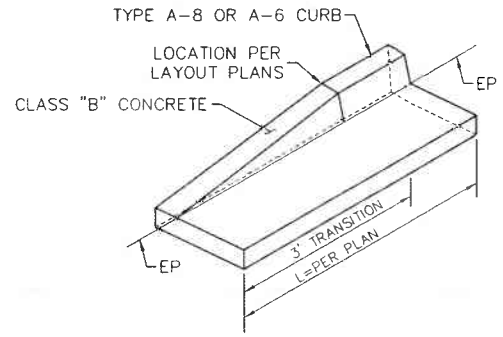

A-8 OR A-6 CURB AND GUTTER TRANSITION
N.T.S.

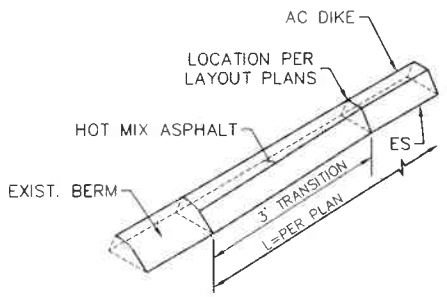

AC DIKE TRANSITION TO EXISTING BERM
N.T.S.

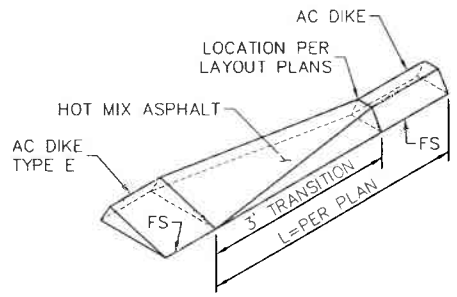

DIKE TRANSITION TO TYPE E
N.T.S.

(106) CURB & DIKE TRANSITIONS
N.T.S.

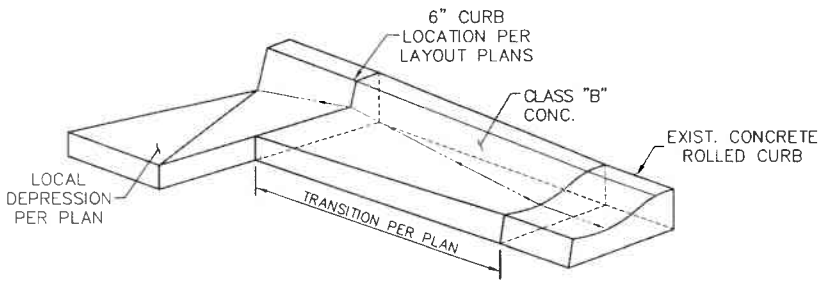

LOCAL DEPRESSION TRANSITION TO EXIST. ROLLED CURB & GUTTER
N.T.S.

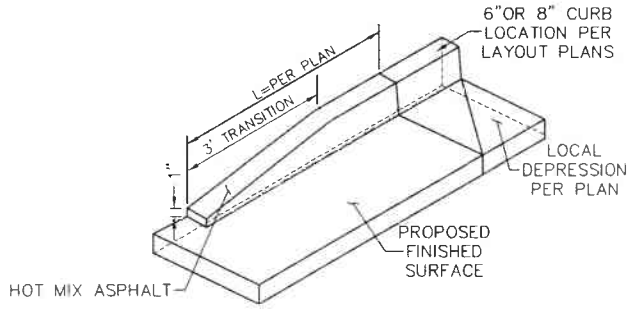

6" OR 8" AC CURB TRANSITION TO PROPOSED FINISHED SURFACE
N.T.S.

(125) TRANSITIONS TO EXISTING BERMS, CURBS OR SURFACE
N.T.S.

PAVEMENT NOTES

(106) CONSTRUCT CURB & DIKE TRANSITIONS PER DETAILS HEREON

(107) CONSTRUCT 6" AC DIKE PER RCTD STD. NO. 212

(108) CONSTRUCT 8" AC DIKE PER RCTD STD. NO. 212

(111) CONSTRUCT TYPE "A-8" CURB WITH REVERSED GUTTER PER RCTD STD. NO. 201 & DETAIL HEREON

(125) CONSTRUCT TRANSITION TO MATCH & JOIN EXISTING BERM, CURB OR EXISTING SURFACE PER DETAILS HEREON

(128) CONSTRUCT TYPE "A-8" CURB & GUTTER PER RCTD STD. NO. 201

(129) CONSTRUCT TRANSITION FROM TYPE "A-8" CURB & GUTTER TO TYPE "A-8" CURB WITH REVERSED GUTTER PER DETAIL HEREON

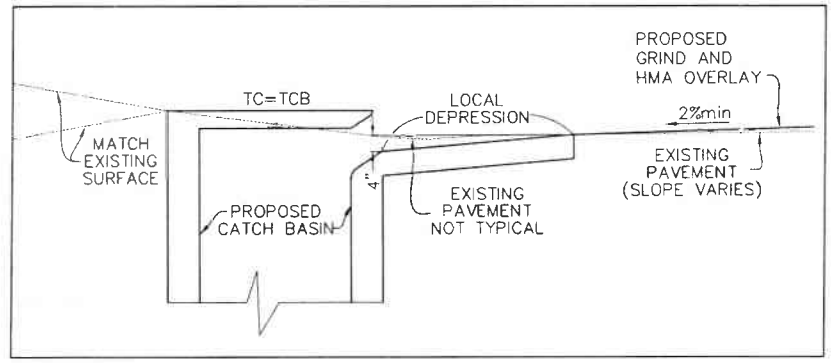

SECTION (A)
N.T.S.

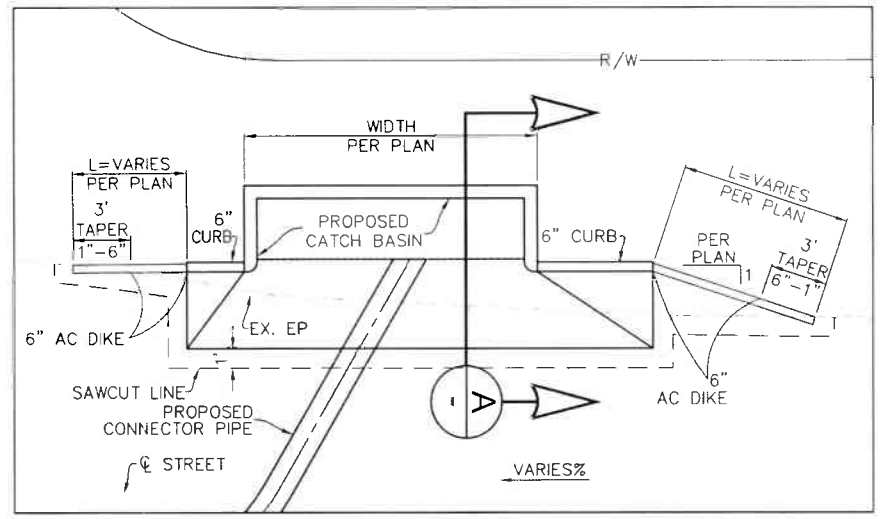

GENERAL CATCH BASIN DETAIL
N.T.S.

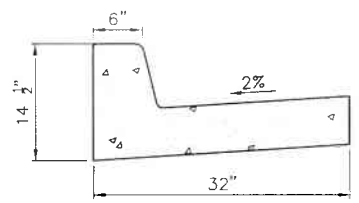

(128) TYPE "A-8" CURB AND GUTTER
N.T.S.

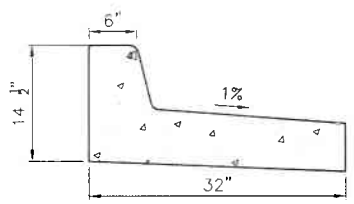

(111) MODIFIED TYPE "A-8" CURB WITH REVERSED GUTTER
N.T.S.

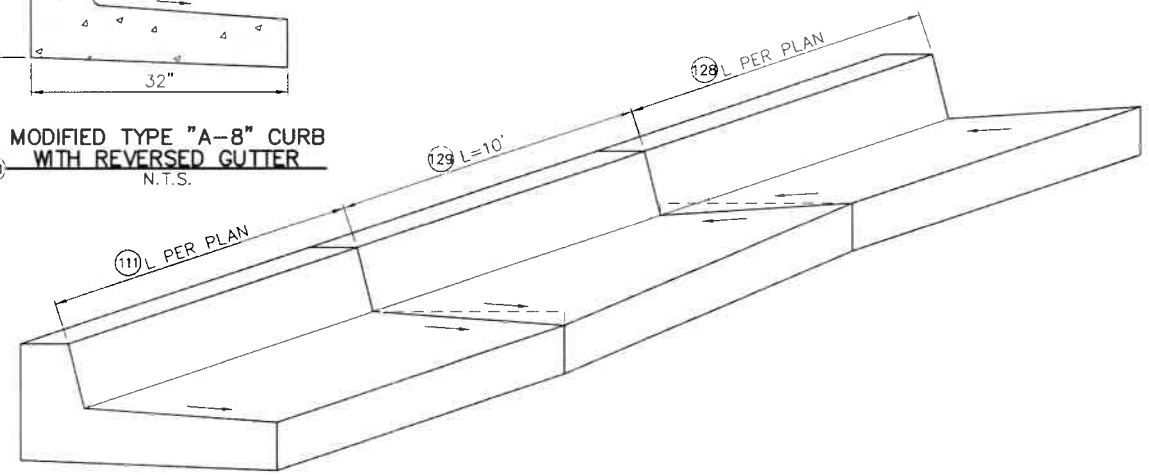

(129) TRANSITION FROM CURB & GUTTER TO CURB & REVERSED GUTTER

CONSTRUCTION DRAWING SET DATED 22 JUNE, 2021

KA Engineering, Inc.
ENGINEERING
LAND PLANNING
SURVEYING
357 N. SHERIDAN STREET
SUITE 117
CORONA, CALIFORNIA 92880
TEL (951) 279-1803
FAX (951) 279-4380
REGISTERED PROFESSIONAL ENGINEER DONALD W. BERGER No. 28949 CIVIL STATE OF CALIFORNIA
ENGINEER R.C.E. 28949 DATE: 8/16/2021

COUNTY FILE No. 970-B

COUNTY OF RIVERSIDE
TRANSPOTATION DEPARTMENT
REC'MD COUNTY OVERSIGHT ENGINEER 8/11/21
APPROVES AS TO COMPLIANCE WITH APPLICABLE COUNTY STANDARDS AND PRACTICES.
REGISTRATION # 76450 DATE SIGNED

Don't Dig...Until You Call U.S.A. Toll Free
DIAL 811
for the location of buried utility lines.
Don't disrupt vital services.
TWO WORKING DAYS BEFORE YOU DIG

BENCH MARK
NAD83 Epoch 2011, CCS83, ZONE 6-
NAVD88(COH88)
RCFC B.M. Z 15502
SET MAG NAIL W/ RCFC WCD TAG FLUSH
E 6,226,565.52 N 2,177,350.50
ELEV: 1,401.46 SURVEY DATE: 02/2013

REF.	DESCRIPTION	APPR	DATE
	REVISIONS		

RIVERSIDE COUNTY FLOOD CONTROL AND WATER CONSERVATION DISTRICT
DESIGNED BY: K&A ENGINEERING
DRAWN BY: ADA
DATE DRAWN: JUNE 2021
P8 NUMBER: 226078
RECOMMENDED FOR APPROVAL BY: DATE: 7-27-2021
APPROVED BY: DATE: 8/4/2021

LAKELAND VILLAGE MDP

PAVEMENT
REPLACEMENT PLAN
DETAILS

PROJECT NO. 3-0-00020
DRAWING NO. 3-0207
SHEET NO. 65 OF 65

ELSINORE VALLEY MUNICIPAL WATER DISTRICT

WATER IMPROVEMENT PLAN

COUNTY OF RIVERSIDE

GENERAL NOTES

1. ALL WORK SHALL CONFORM TO THE ELISNORE VALLEY MUNICIPAL WATER DISTRICT (EVMWD) DESIGN AND CONSTRUCTION STANDARDS FOR WATER, RECYCLED WATER AND SANITARY SEWER FACILITIES.
2. CONSTRUCTION MATERIALS TESTING AND INSPECTION SHALL COMPLY WITH STANDARDS AND SPECIFICATIONS AND SHALL MEET OR EXCEED THE REQUIREMENTS OF THE GOVERNING AGENCY, THE STANDARD SPECIFICATIONS FOR PUBLIC WORKS CONSTRUCTION ("GREEN BOOK") AND THE AMERICAN SOCIETY FOR TESTING AND MATERIALS (ASTM) STANDARDS. FAILURE TO MEET ANY OF THE ABOVE REQUIREMENTS SHALL BE CAUSE FOR REJECTION.
3. THE CONTRACTOR SHALL NOTIFY EVMWD (5) FIVE WORKING DAYS PRIOR TO BEGINNING WORK (951) 674-3146
4. DEPTH AND LOCATION OF EXISTING UNDERGROUND FACILITIES SHALL BE DETERMINED BY THE CONTRACTOR BY POTHOLING AND FIELD SURVEY OF ELEVATIONS AND SHALL BE GIVEN TO THE INSPECTOR PRIOR TO TRENCHING. THE CONTRACTOR SHALL ALSO CONTACT UNDERGROUND SERVICE ALERT (811) PRIOR TO ANY EXCAVATION WORK.
5. ALL CONSTRUCTION AND OPERATIONS BY THE CONTRACTOR SHALL BE IN ACCORDANCE WITH CAL-OSHA REQUIREMENTS.
6. THE CONTRACTOR SHALL KEEP A COMPLETE RECORD OF ALL CONSTRUCTIONS CHANGES AND SHALL MAKE INFORMATION AVAILABLE TO THE INSPECTOR FOR PREPARATION OF "AS BUILT" DRAWINGS. THE "AS BUILT" DRAWINGS SHALL BE SUBMITTED TO EVMWD FOR REVIEW PRIOR TO FINAL REVIEW AND ACCEPTANCE OF THE PROJECT.
7. WHERE THE WATER MAIN AND SEWER CROSS STORM DRAINS, OTHER PIPELINES, TELEPHONE AND ELECTRIC DUCTS, OR SIMILAR INSTALLATIONS, A MINIMUM OF 12 INCHES OF VERTICAL CLEARANCE SHALL BE PROVIDED BETWEEN THE MAIN OR SEWER AND OTHER INSTALLATIONS UNLESS OTHERWISE DIRECTED BY EVMWD PERSONNEL.
8. SEPARATION OF SEWER AND WATER LINES MUST COMPLY WITH EVMWD STANDARD PLANS S-3 OR W-2 AND SHALL MEET OR EXCEED THE REQUIREMENTS OF THE STATE OF CALIFORNIA, DEPARTMENT OF PUBLIC HEALTH TITLE 22, CHAPTER 16, ARTICLE 4, SECTION 64572.
9. CONNECTIONS TO EXISTING EVMWD SEWER OR WATER LINES SHALL BE IN ACCORDANCE WITH STANDARD EVMWD PROCEDURES AND SHALL NOT BE MADE UNLESS EVMWD INSPECTOR IS PRESENT.
10. UNLESS WAIVED BY EVMWD AN INSULATED COPPER SOLID CORE 10 GAGE TRACER WIRE SHALL BE PLACED WITH EACH SEWER MAIN TO ASSIST WITH FUTURE LOCATION. WARNING TAPE SHALL BE PLACE AT LEAST 6" ABOVE THE SEWER MAIN AND SEWER LATERALS, BUT NOT DEEPER THAN 24" BELOW THE EXISTING FINISHED GRADE. WATER MAINS AND SERVICES SHALL ALSO HAVE TRACER WIRE AND WARNING TAPE INSTALLED IN THE TRENCH.
11. THE LENGTH OF OPEN TRENCH AT ANY ONE TIME SHALL BE LIMITED TO 600 FEET ALONG ROAD RIGHT-OF-WAY UNLESS OTHERWISE AGREED TO IN WRITING BY EVMWD. TRENCH SHALL BE BACKFILLED AND COMPACTED AT THE CONCLUSION OF EACH DAY. OPEN TRENCH LIMITS ARE SUBJECT TO CITY REQUIREMENTS.
12. SURFACE IMPROVEMENTS DAMAGED OR REMOVED AS A RESULT OF THE CONTRACTOR'S OPERATIONS SHALL BE RECONSTRUCTED BY THE CONTRACTOR TO THE LOCAL GOVERNING AGENCY'S REQUIREMENTS AT THE CONTRACTOR'S EXPENSE.
13. ALL THE REVISIONS TO THESE DRAWINGS MUST BE APPROVED BY EVMWD ENGINEERING MANAGER.
14. IT IS THE PROJECT ENGINEER'S RESPONSIBILITY TO TIE OUT ANY EXISTING STREET MONUMENTATION EITHER VISIBLE OR BURIED, PRIOR TO CONSTRUCTION.
15. IT IS THE CONTRACTOR'S RESPONSIBILITY TO PROTECT ANY STREET MONUMENTATION IN PLACE. IF ANY MONUMENT IS DISTURBED OR DESTROYED, THE CONTRACTOR WILL BE REQUIRED TO CONTRACT WITH A REGISTERED LAND SURVEYOR FOR THE RE-ESTABLISHMENT AND MAPPING OF THE DESTROYED MONUMENT AT THE CONTRACTOR'S EXPENSE.
16. THE EXISTENCE AND LOCATION OF ANY UNDERGROUND UTILITY PIPES OR STRUCTURES SHOWN ON THESE PLANS WERE OBTAINED BY A SEARCH OF THE AVAILABLE RECORDS. TO THE BEST OF EVMWD KNOWLEDGE THERE ARE NO EXISTING UTILITIES EXCEPT AS SHOWN ON THESE PLANS. THE CONTRACTOR IS REQUIRED TO TAKE DUE PRECAUTIONARY MEASURES TO PROTECT THE UTILITY LINES SHOWN AND ANY OTHER LINES NOT ON RECORD OR NOT SHOWN ON THESE PLANS OR MARKED ON THE GROUND BY UNDERGROUND SERVICE ALERT.
17. IT SHALL BE THE RESPONSIBILITY OF THE DEVELOPER OR CONTRACTOR TO APPLY FOR ANY NECESSARY ENCROACHMENT PERMIT FROM ALL GOVERNING AGENCIES.
18. IT SHALL BE THE RESPONSIBILITY OF THE CONTRACTOR/DEVELOPER TO STAMP A 2" HIGH "S", "W" OR "IW" ON THE CURB FACE FOR ALL SEWER LATERALS, WATER, AND IRRIGATION LATERALS AT THE LOCATION WHERE THE LATERAL PASSES BENEATH THE CURB. A "V" SHALL BE STAMPED ON THE CURB FACE AT ALL VALVES.
19. A STEEL ROD OR STAKE 6" ABOVE THE GROUND OR 10 GAUGE COPPER WIRE WITH 2" COPPER TAG, SHALL BE INSTALLED AT THE END OF EACH SEWER LATERAL TO ASSIST IN LOCATING AT A LATER DATE. IN NEW TRACT DEVELOPMENT A 3"X8' PVC PIPE OR 2"X4"X8' BOARD SHALL BE USED TO MARK THE ENDS OF LATERALS.
20. ALL SEWERS SHALL BE BALLED, AIR TESTED, MANDREL TESTED AND CCTV INSPECTED PRIOR TO ACCEPTANCE BY THE DISTRICT. AIR TEST SHALL BE PER UNI-B-6, MANDREL TEST SHALL BE IN ACCORDANCE WITH SECTION 306-1.2.12 OF THE STANDARD SPECIFICATION FOR PUBLIC WORKS CONSTRUCTION AND CLOSED CIRCUIT TELEVISION INSPECTION PER DISTRICT STANDARDS.
21. A PROPERTY LINE CLEANOUT SHALL BE INSTALLED, 5 1\2' DEEP, OUTSIDE OF RIGHT-OF-WAY LINE. THE 1/8 BEND AND 45° WYE CONNECTION SHALL BE POLYVINYL CHLORIDE (PVC) OR ACRYLONITRILE BUTADIENE STYRENE (ABS).
22. PROTECT PIPE, JOINTS, LINING AND COATING, AND BED PIPE CAREFULLY TO PROVIDE CONTINUOUS BEARING AND PREVENT UNEVEN SETTLEMENT. PIPE SHALL BE PROTECTED AGAINST FLOTATION AT ALL TIMES. OPEN ENDS OF THE INSTALLED SEWER PIPE SHALL BE SEALED AT ALL TIMES WHEN CONSTRUCTION IS NOT IN PROCESS.
23. PIPE JOINTS SHALL NOT BE DEFLECTED GREATER THEN 80% OF THE MAXIMUM ANGLE RECOMMENDED BY THE MANUFACTURER.
24. SEWER AND WATER PIPE TRENCH BACKFILL SHALL BE IN ACCORDANCE WITH EVMWD STANDARD DRAWINGS S-1 & W-3 AND GOVERNING AGENCY. A FULL TIME SOILS TECHNICIAN MUST BE ONSITE DURING BACKFILLING AND COMPACTION.
25. ALL SERVICE LATERALS SHALL BE LOCATED AT RIGHT ANGLES TO THE MAIN UNLESS OTHERWISE INDICATED ON THE PLANS AND ACCEPTED BY EVMWD. MATERIALS FOR LATERALS SHALL MEET EVMWD SPECIFICATIONS, SEWER ELEVATIONS SHOWN ARE FLOWLINE (CONDUIT INVERT).
26. MINIMUM COVER FOR ALL WATER MAINS LESS THAN 12 INCHES IN DIAMETER SHALL BE 3.5 FEET. WATER MAINS 12 INCHES AND GREATER SHALL HAVE A MINIMUM COVER OF 4 FEET. MAXIMUM COVER FOR WATER MAINS SHALL BE 8 FEET, UNLESS ACCEPTED BY THE EVMWD ENGINEERING MANAGER.
27. WHEREVER VALVES ARE TO BE INSTALLED, THE INVERT SLOPE OF THE MAIN SHALL NOT EXCEED SIX PERCENT. VALVES SHALL BE LOCATED SO THAT THERE WILL BE A MINIMUM CLEARANCE OF 6 INCHES BETWEEN THE TOP OF THE VALVE AND THE BOTTOM OF THE VALVE BOX COVER AT STREET SECTIONS.
28. THE MINIMUM CLEARANCE BETWEEN FIRE HYDRANTS AND UTILITY POLES, LIGHT STANDARDS AND SIGN POSTS SHALL BE 3 FEET.
29. NO WATER METER BOXES SHALL BE INSTALLED IN DRIVEWAYS OR SIDEWALKS. METER BOXES SHALL BE SET AT HIGH GRADE TO ELIMINATE WATER RUNOFF. INSTALL REDUCED PRESSURE PRINCIPLE OR BACK FLOW DEVICE AFTER IRRIGATION METER. INSTALL A PRESSURE REGULATOR ON HOMES OR BUSINESS IF THE IF THE PRESSURE IS OVER 80 PSI. A PRESSURE REGULATOR SHALL BE INSTALLED PRIOR TO ENTERING THE HOUSE/BUILDING PLUMBING.
30. ANY CHANGE IN FLOW DIRECTION (BENDS, TEES, FIRE HYDRANTS, ETC.) SHALL UTILIZE RESTRAINED DUCTILE IRON PIPE AND FITTINGS, IN LIEU OF THRUST BLOCKS.
31. AIR VALVES SHALL BE INSTALLED AT HIGH POINTS AND BLOWOFFS AT ALL LOW POINTS ON THE LINE AS PER EVMWD STANDARD DRAWINGS W-16, W-17, AND W-19.
32. IF REQUIRED, A RESERVOIR AND BOOSTER PUMP STATION WILL HAVE TO BE CONSTRUCTED AND IN SERVICE BEFORE ANY SERVICE CAN BE PROVIDED TO THE UNITS CONSTRUCTED WITHIN THIS SUBDIVISION.
33. PRIOR TO PAVING THE STREET SECTION, ALL UNDERGROUND FACILITIES WITH LATERALS, INCLUDING BUT NOT LIMITED TO SEWER, WATER, TELEPHONE, ELECTRIC POWER, GAS, CABLE TELEVISION AND DRAINAGE FACILITIES SHALL BE IN PLACE AND TESTED TESTED AND ACCEPTED BY THE RESPONSIBLE UTILITY/AGENCY.
34. HOUSE SLAB ELEVATIONS THAT ARE LOWER THAN THE UPSTREAM MANHOLE RIM ELEVATION SHALL BE EQUIPPED WITH BACKWATER VALVES. THE PROJECT ENGINEER SHALL INDICATE ON THE SEWER LATERAL TABLE WHICH LOTS ARE INVOLVED.
35. PRIOR TO THE CONSTRUCTION OF ANY BACKFLOW PROTECTION DEVICE, THE CONTRACTOR SHALL NOTIFY THE DISTRICT BACKFLOW ASSEMBLY INSPECTOR 24 HOURS PRIOR TO THE CONSTRUCTION ASSEMBLY. THE DISTRICT BACKFLOW INSPECTOR SHALL PROVIDE FINAL INSPECTION, TESTING AND ACCEPTANCE PRIOR TO TURNING ON THE WATER SUPPLY.
36. SURVEY STAKING FOR WATER PIPELINES IS AT 50-FOOT INTERVALS PLUS ALL APPURTENANCES, HORIZONTAL ALIGNMENT CHANGES AND VERTICAL ALIGNMENT CHANGES. SURVEY STAKING FOR SEWER PIPELINES IS AT 25-FOOT INTERVALS PLUS ALL LATERALS, MANHOLES IN AND OUT, APPURTENANCES, CLEANOUTS, HORIZONTAL & VERTICAL ALIGNMENT CHANGES, BEGINNING OF CURVES AND END OF CURVES.
37. ALL WATER VALVES IN UNPAVED AREAS SHALL BE SURROUNDED BY AN ASPHALT PAD INSTALLED IN ACCORDANCE WITH EVMWD STANDARD DRAWING W-27. A VALVE MARKER SHALL BE INSTALLED IN THE UNPAVED AREAS IN ACCORDANCE WITH EVMWD STANDARD DRAWING W-28.
38. ALL MANHOLES INSTALLED IN UNPAVED AREAS SHALL BE SURROUNDED BY AN ASPHALT SECTION INSTALLED IN ACCORDANCE WITH EVMWD STANDARD DRAWING S-1
39. ALL FACILITIES LOCATED DOWNSTREAM OF THE EATER METER AND FIRE DETECTOR CHECK METER ARE PRIVATE AND ARE TO MAINTAINED BY THE OWNER.
40. INTERIOR OF SEWER MANHOLES SHALL RECEIVE SPRAY-ON EPOXY COATING OR POLYURETHANE LINING. REFER TO THE ACCEPTED MATERIALS GUIDELINE LIST FOR APPROVED MANUFACTURER.
41. NO SHUT DOWNS SHALL BE ALLOWED ON MONDAYS & FRIDAYS.
42. REFER TO EVMWD WEBSITE FOR WATER MAIN TESTING PROTOCOL.

FIRE DEPARTMENT NOTES:

1. FIRE HYDRANTS ARE SUPER FIRE HYDRANTS (6"X4"X2 1/2"X2 1/2") AND STANDARD FIRE HYDRANT (6"X4"X2 1/2").
2. ALL FIRE HYDRANTS ARE WET BARREL CONFORMING TO AWWA C-503 AND SHALL BE DESIGNED FOR A MINIMUM WORKING PRESSURE OF 150 PSI.
3. ALL BOLTS, RODS, ETC. SHALL BE COATED & WRAPPED.
4. FIRE HYDRANTS SHALL BE CLASSIFIED IN ACCORDANCE WITH THEIR RATED CAPACITIES (AT 20PSI 1.4 BAR RESIDUAL PRESSURE OR OTHER DESIGNATED VALUE) AS FOLLOW: CLASS AA-RATED CAPACITY OF 1,500 GPM OR GREATER (5,680 L/MIN), CLASS A-RATED CAPACITY OF 1000-1499 GPM (3,785-5,675 L/MIN.), CLASS B-RATED CAPACITY OF 500-999 GPM (1,900-3780 L\MIN.), CLASS C-RATED CAPACITY OF LESS THAN 500 GPM (1,900 L/MIN.). ALL BARRELS ARE TO BE CHROME YELLOW, WITH TOPS AND NOZZLE CAPS PAINTED WITH THE FOLLOWING CAPACITY-INDICATING COLOR SCHEME TO PROVIDE SIMPLICITY AND CONSISTENCY WITH COLOR USED IN SIGNAL WORK FOR SAFETY, DANGER AND INTERMEDIATE CONDITION: CLASS A-GREEN.
5. FIRE HYDRANTS SHALL BE INSTALLED WITH THE LARGEST OUTLET FACING RIGHT ANGLES TO THE CURB.
6. THE EXTERIOR SURFACES OF ALL FIRE HYDRANT RISER BARRELS, HEADS AND GUARD POSTS (IF ANY) WHICH EXTEND ABOVE GROUND SHALL BE PAINTED CHROME YELLOW. THE TOPS AND NOZZLE CAPS OF ALL FIRE HYDRANTS SHALL BE PAINTED IN ACCORDANCE WITH THE NATIONAL FIRE PROTECTION ASSOCIATION STD. NUMBER 291, CHAPTER 3.
7. ALL FIRE HYDRANT OUTLETS SHALL HAVE WSH THREADS COMPLETE WITH BRONZE OR PLASTIC CAP WITH CHAIN ATTACHED.
8. EACH FIRE HYDRANT SHALL STAND PLUMB, SET TO THE ESTABLISHED GRADE, WITH THE CENTER USE OF THE LOWEST OUTLET NOT LESS THAN TWENTY-FOUR (24) INCHES ABOVE GROUND.

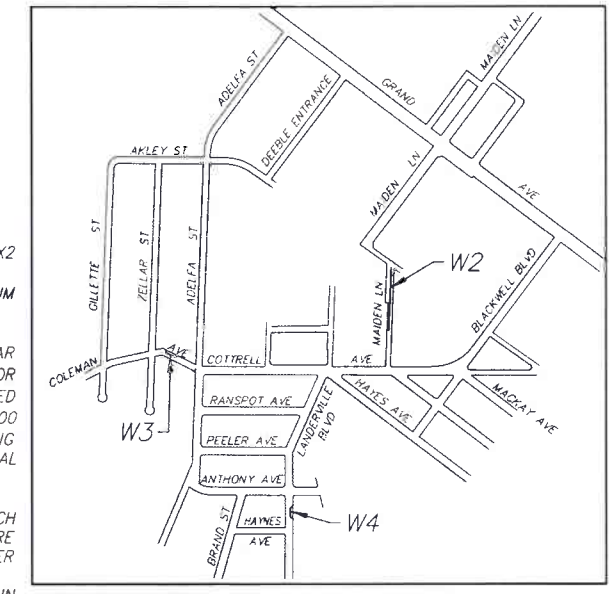

VICINITY MAP

NTS

ABBREVIATIONS

AC	ASPHALTIC CONCRETE
A&V	AIR & VACUUM RELEASE VALVE
BC	BEGIN CURVE
BF	BACKFLOW PREVENTER
BFV	BUTTERFLY VALVE
BO	BLOW OFF
CML&C	CEMENT MORTAR LINED & COATED
DIP	DUCTILE IRON PIPE
E OR T	ELECTRICAL OR TELEPHONE CONDUIT
(E)	EAST
EC	END CURVE
ELEV	ELEVATION
EVMWD	ELSINORE VALLEY MUNICIPAL WATER DISTRICT
FF	FINISHED FLOOR
FH	FIRE HYDRANT
FLG'D	FLANGED
G	GAS LINE
GB	GRADE BREAK
GV	GATE VALVE
INV	INVERT
MH	MANHOLE
MJ	MECHANICAL JOINT
NIC	NOT IN CONTRACT
(N)	NORTH
PE	PAD ELEVATION
PO	PUSH ON
PVC	POLYVINYL CHLORIDE
R/W	RIGHT OF WAY
RW	RECYCLED WATER
RP	REDUCED PRESSURE PRINCIPLE BACKFLOW DEVICE
S	SEWER LINE
(S)	SOUTH
TCE	TEMPORARY CONSTRUCTION EASEMENT
W	WATER LINE
(W)	WEST

NOTIFICATIONS

NOTE: THE CONTRACTOR SHALL NOTIFY THE FOLLOWING UTILITIES OR AGENCIES FORTY-EIGHT (48) HOURS PRIOR OF STARTING CONSTRUCTION OR EXCAVATION.

RIVERSIDE COUNTY TRANSPORTATION DEPARTMENT	(951) 955-6740
ELSINORE VALLEY MUNICIPAL WATER DISTRICT	(951) 674-3146
RIVERSIDE COUNTY FLOOD CONTROL DISTRICT	(800) 955-1288
SOUTHERN CALIFORNIA GAS COMPANY	(800) 272-2600
SOUTHERN CALIFORNIA EDISON	(800) 351-2450
UNDERGROUND SERVICE ALERT (USA)	(800) 227-2600

CONSTRUCTION NOTES

		TOTAL	UNIT
1	INSTALL 12" CL350 DUCTILE IRON PIPE & RESTRAINED JOINTS PER EVMWD STD. DWG NO. W-3, W-15	630	LF
2	INSTALL 8" C-900 CL235 DR14 PVC PIPE & RESTRAINED JOINTS PER EVMWD STD. DWG NO. W-3, W-15	100	LF
3	NOT USED	-	-
4	INSTALL 12"x12"x6" FLG'D TEE PER EVMWD STD. DWG NO. W-34	2	EA
5	INSTALL 12" 45° BEND, SEE WATER RELOCATION NOTE 8	2	EA
6	INSTALL 8" 45° BEND, SEE WATER RELOCATION NOTE 8	8	EA
7	INSTALL 4"x8" FLG'D REDUCER	2	EA
8	INSTALL 8" FxM ADAPTER	2	EA
9	NOT USED	-	-
10	INSTALL FLEXIBLE PIPE TRANSITION COUPLING, FUSION BONDED EXPOXY COATED WITH STAINLESS STEEL HARDWARE	4	EA
11	INSTALL 12" GATE VALVE WITH WELL & RISER PER EVMWD STD. DWG NO. W-13	1	EA
12	INSTALL NEW FIRE HYDRANT ASSEMBLY PER EVMWD STD. DWG NO. W-7	2	EA
13	REMOVE EXISTING WATER SERVICE & INSTALL 1" WATER SERVICE CONNECTION PER EVMWD STD. DWG NO. W-9 (RECONNECT TO EXISTING METER)	7	EA
14	CONTRACTOR TO REMOVE & LEGALLY DISPOSE OF EXISTING 1" STEEL PIPE	630	LF
15	REMOVE & LEGALLY DISPOSE OF EXISTING WATER PIPE	730	LF
16	INSTALL 12" FxM ADAPTER	1	EA

CONSTRUCTION DRAWING SET DATED 22 JUNE, 2021

DIGALERT — DIAL BEFORE YOU DIG — TWO WORKING DAYS BEFORE YOU DIG — TOLL FREE DIAL 811 — A PUBLIC SERVICE BY UNDERGROUND SERVICE ALERT

THE DESIGN AND CONSTRUCTION OF THE PROJECT AS WELL AS THE ACCURACY OF FIGURES, ARE THE RESPONSIBILITY OF THE DESIGN ENGINEER PLAN CHECK SERVICES BY EVMWD WILL BE LIMITED TO ADHERENCE OF THE DISTRICT'S STANDARDS, MATERIALS, QUANTITIES AND SIZE OF FACILITIES, AS THEY RELATE TO THE SERVICE DEMANDS OR THE APPROVED MASTER PLAN.

BENCHMARK
ELEVATION: 1,401.46
DATE: 02/2013
DATUM: NAVD88
DESCRIPTION: RCFC B.M. Z 15502 SET MAG NAIL W/ RCFC WCD TAG FLUSH.
E 6226565.52
N 2177350.50

VERIFY SCALES
BAR IS ONE INCH ON ORIGINAL DRAWING
0 — 1
IF NOT ONE INCH ON THIS SHEET, ADJUST ACCORDINGLY

SHEET INDEX

SHEET NO.	DESCRIPTION
W1	TITLE SHEET
W2-W3	WATER PLAN & PROFILE
W4-W5	WATER RELOCATION DETAILS

COUNTY FILE No. 970-B

REGISTERED PROFESSIONAL ENGINEER — DONALD W. BERGH — No. 28949 — CIVIL — STATE OF CALIFORNIA

PRIVATE ENGINEER'S CERTIFICATION
I CERTIFY THAT THE DESIGN OF THE WATER SYSTEM IS IN ACCORDANCE WITH THE PRESCRIBED BY THE RIVERSIDE COUNTY FIRE DEPARTMENT.
DONALD W. BERGH — DATE 8/16/2021

EXISTING UTILITY DISCLAIMER NOTE
APPROVAL OF THIS PLAN BY THE ELSINORE VALLEY MUNICIPAL WATER DISTRICT DOES NOT CONSTITUTE A REPRESENTATION AS TO THE ACCURACY OF THE LOCATION OF, OR THE EXISTENCE OF, ANY UNDERGROUND UTILITY, PIPE, OR STRUCTURE WITHIN THE LIMITS OF THIS PROJECT.

OWNER/DEVELOPER
RIVERSIDE COUNTY FLOOD CONTROL & WATER CONSERVATION DISTRICT

NOTE: WORK CONTAINED WITHIN THESE PLANS SHALL NOT COMMENCE UNTIL AN ENCROACHMENT PERMIT AND/OR A GRADING PERMIT HAS BEEN ISSUED.

THE PRIVATE ENGINEER SIGNING THESE PLANS IS RESPONSIBLE FOR ASSURING THE ACCURACY AND ACCEPTABILITY OF THE DESIGN HEREON. IN THE EVENT OF DISCREPANCIES ARISING AFTER COUNTY APPROVAL OR DURING CONSTRUCTION, THE PRIVATE ENGINEER SHALL BE RESPONSIBLE FOR DETERMINING AN ACCEPTABLE SOLUTION AND REVISING THE PLANS FOR APPROVAL BY THE COUNTY.

SEWER/WATER/RECYCLED WATER APPROVED BY:
ELSINORE VALLEY MUNICIPAL WATER DISTRICT
GENERAL MANAGER — DATE 8/5/2021
APPROVAL IS VALID FOR 2 YEARS FROM THE DATE SIGNED

DEPARTMENT APPROVALS
ENGINEERING — WATER — WASTEWATER

ENGINEER REV.	BY	DATE	REVISIONS	COUNTY APPR.	DATE

DESIGNED BY: DRAWN BY: CHECKED BY:

COUNTY OF RIVERSIDE TRANSPORTATION DEPARTMENT
RECMD COUNTY OVERSIGHT ENGINEER — 8/11/21
APPROVES AS TO COMPLIANCE WITH APPLICABLE COUNTY STANDARDS AND PRACTICES.
REGISTRATION # 76450 — DATE SIGNED

K&A Engineering, Inc. — ENGINEERING, LAND PLANNING, SURVEYING
357 N. SHERIDAN STREET, SUITE 117, CORONA, CALIFORNIA 92880, TEL. (951) 279-1800, FAX (951) 279-4380
ENGINEER R.C.E. 28949 — DATE: 8/16/2021

ELSINORE VALLEY MUNICIPAL WATER DISTRICT
WATER IMPROVEMENT PLAN
LINE H STORM DRAIN
TITLE SHEET

SCHEDULE ___ COUNTY OF RIVERSIDE I.P. NO.
SCALE: AS SHOWN RES: _____ P.Z. _____

SHEET NO. W1 OF W5 SHTS
COUNTY FILE NO.

IN PREPARING THESE PLANS, K&A ENGINEERING, INC DID A THOROUGH SEARCH FOR ALL EXISTING PLANS AND COMPILED A FIELD SURVEY OF ALL ABOVE GROUND APPURTENANCES. K&A ENGINEERING, INC. PROVIDES NO WARRANTY AND ACCEPTS NO RESPONSIBILITY AS TO THE ACTUAL LOCATION OF ANY UNDERGROUND OR ABOVE GROUND UTILITY EITHER INSTALLED BEFORE OR AFTER THE DATE OF THE PREPARATION OF THESE PLANS. CONTRACTOR TO CONTACT UNDERGROUND SERVICE ALERT AT 1-800-227-2600 TO VERIFY LOCATION OF EXISTING UTILITY LOCATIONS AND SHALL CONTACT THE ENGINEER OF RECORD IF THERE IS ANY MATERIAL DISCREPANCY.

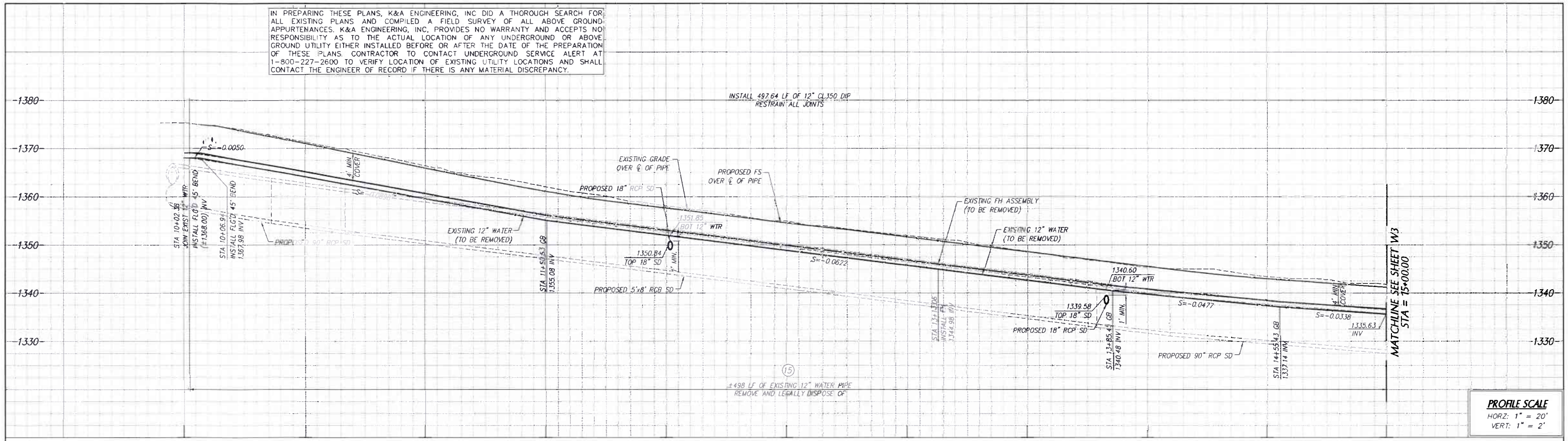

PROFILE SCALE
HORZ: 1" = 20'
VERT: 1" = 2'

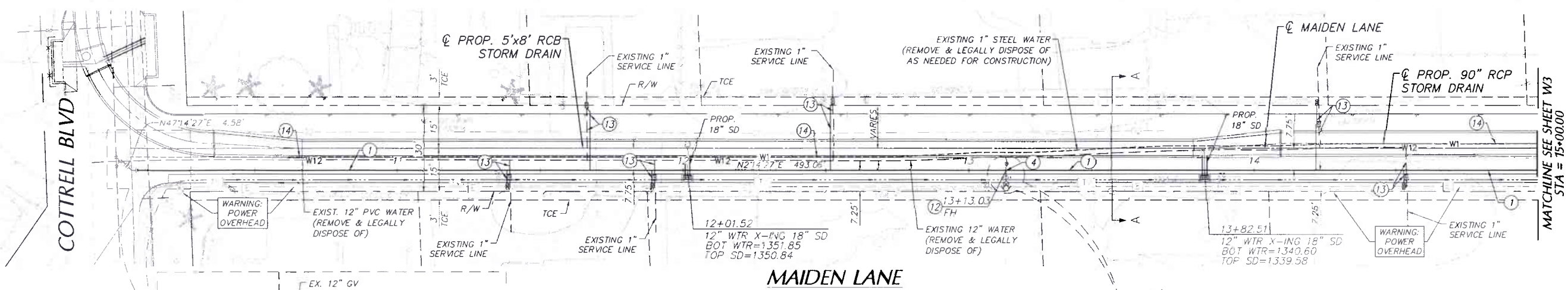

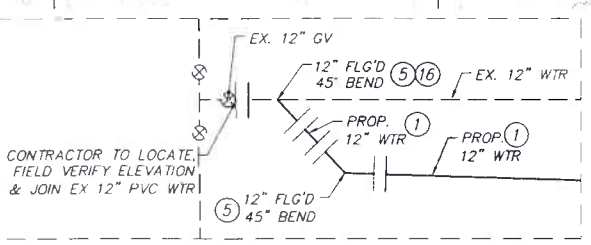

SCALE: 1"=20'
0 20 40 60 80

CONSTRUCTION NOTES

1	INSTALL 12" CL350 DUCTILE IRON PIPE & RESTRAINED JOINTS PER EVMWD STD. DWG NO. W-3, W-15
4	INSTALL 12"x12"x6" FLG'D TEE PER EVMWD STD. DWG NO. W-34
5	INSTALL 12" 45° BEND, SEE WATER RELOCATION NOTE 8
12	INSTALL NEW FIRE HYDRANT ASSEMBLY PER EVMWD STD. DWG NO. W-7
13	REMOVE EXISTING WATER SERVICE & INSTALL 1" WATER SERVICE CONNECTION PER EVMWD STD. DWG NO. W-9 (RECONNECT TO EXISTING METER)
14	CONTRACTOR TO REMOVE & LEGALLY DISPOSE OF EXISTING 1" STEEL PIPE
15	REMOVE & LEGALLY DISPOSE OF EXISTING WATER PIPE
16	INSTALL 12" FxM ADAPTER

NOTE: EVMWD TO VERIFY ALL SERVICES

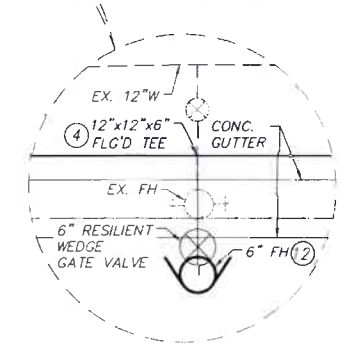

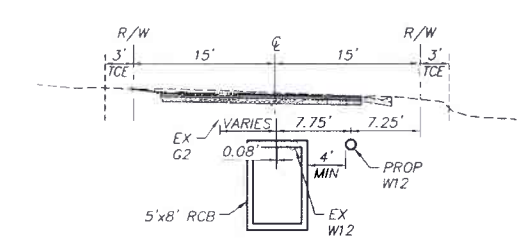

SECTION "A"-"A" @ 13+50
MAIDEN LANE
SCALE: 1"=10'

DIGALERT
DIAL BEFORE YOU DIG
TWO WORKING DAYS BEFORE YOU DIG
TOLL FREE DIAL 811
A PUBLIC SERVICE BY UNDERGROUND SERVICE ALERT

VERIFY SCALES
BAR IS ONE INCH ON ORIGINAL DRAWING
0 1
IF NOT ONE INCH ON THIS SHEET, ADJUST ACCORDINGLY

BENCHMARK:
SEE SHEET 1

REGISTERED PROFESSIONAL ENGINEER
DONALD W. BERGH
No. 28949
CIVIL
STATE OF CALIFORNIA

NOTE: WORK CONTAINED WITHIN THESE PLANS SHALL NOT COMMENCE UNTIL AN ENCROACHMENT PERMIT AND/OR A GRADING PERMIT HAS BEEN ISSUED.

THE PRIVATE ENGINEER SIGNING THESE PLANS IS RESPONSIBLE FOR ASSURING THE ACCURACY AND ACCEPTABILITY OF THE DESIGN HEREON. IN THE EVENT OF DISCREPANCIES ARISING AFTER COUNTY APPROVAL OR DURING CONSTRUCTION, THE PRIVATE ENGINEER SHALL BE RESPONSIBLE FOR DETERMINING AN ACCEPTABLE SOLUTION AND REVISING THE PLANS FOR APPROVAL BY THE COUNTY.

SEWER/WATER/RECYCLED WATER APPROVED BY:
ELSINORE VALLEY MUNICIPAL WATER DISTRICT

GENERAL MANAGER — DATE 8/5/2021
APPROVAL IS VALID FOR 2 YEARS FROM THE DATE SIGNED

DEPARTMENT APPROVALS
ENGINEERING — WATER — WASTEWATER

ENGINEER			REVISIONS	COUNTY	
REV.	BY	DATE		APPR.	DATE

DESIGNED BY: DRAWN BY: CHECKED BY:

COUNTY FILE No. 970-B

COUNTY OF RIVERSIDE
TRANSPORTATION DEPARTMENT
RECMD — COUNTY OVERSIGHT ENGINEER — 8/11/21
APPROVES AS TO COMPLIANCE WITH APPLICABLE COUNTY STANDARDS AND PRACTICES
REGISTRATION # 76450 — DATE SIGNED

K&A Engineering, Inc.
ENGINEERING
LAND PLANNING
SURVEYING
357 N. SHERIDAN STREET
SUITE 117
CORONA, CALIFORNIA 92880
TEL (951) 279-1800
FAX (951) 279-4380

ENGINEER R.C.E. 28949 — DATE: 8/16/2021

ELSINORE VALLEY MUNICIPAL WATER DISTRICT
WATER IMPROVEMENT PLAN
LINE H STORM DRAIN
WATER PLAN & PROFILE

SCHEDULE ___ COUNTY OF RIVERSIDE L.P. NO.
SCALE: AS SHOWN RES: _____ P.Z.: _____

SHEET NO. W2
OF W5 SHTS
COUNTY FILE NO.

CONSTRUCTION DRAWING SET DATED 22 JUNE, 2021

IN PREPARING THESE PLANS, K&A ENGINEERING, INC DID A THOROUGH SEARCH FOR ALL EXISTING PLANS AND COMPILED A FIELD SURVEY OF ALL ABOVE GROUND APPURTENANCES. K&A ENGINEERING, INC, PROVIDES NO WARRANTY AND ACCEPTS NO RESPONSIBILITY AS TO THE ACTUAL LOCATION OF ANY UNDERGROUND OR ABOVE GROUND UTILITY EITHER INSTALLED BEFORE OR AFTER THE DATE OF THE PREPARATION OF THESE PLANS. CONTRACTOR TO CONTACT UNDERGROUND SERVICE ALERT AT 1-800-227-2600 TO VERIFY LOCATION OF EXISTING UTILITY LOCATIONS AND SHALL CONTACT THE ENGINEER OF RECORD IF THERE IS ANY MATERIAL DISCREPANCY.

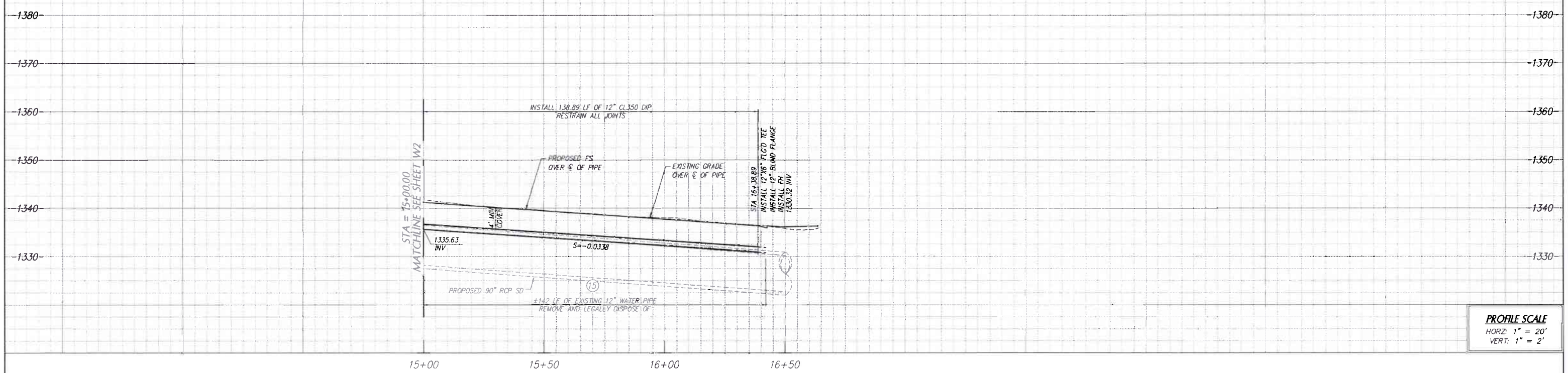

PROFILE SCALE
HORZ: 1" = 20'
VERT: 1" = 2'

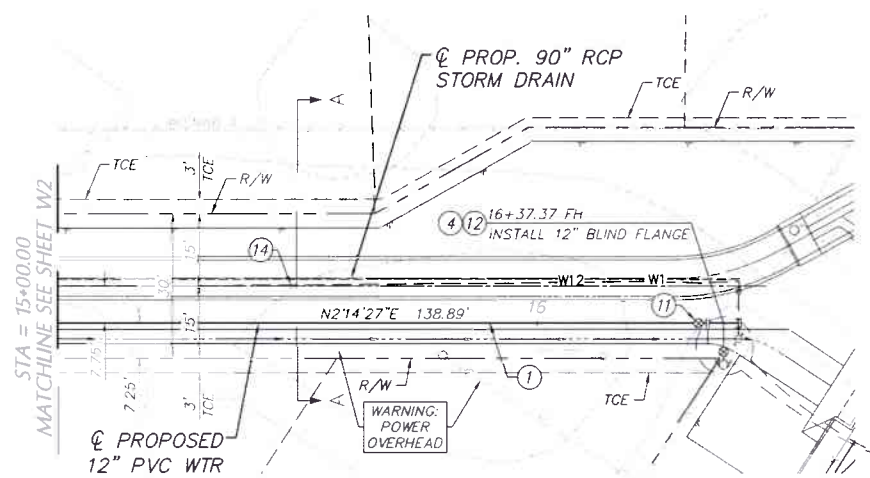

MAIDEN LANE

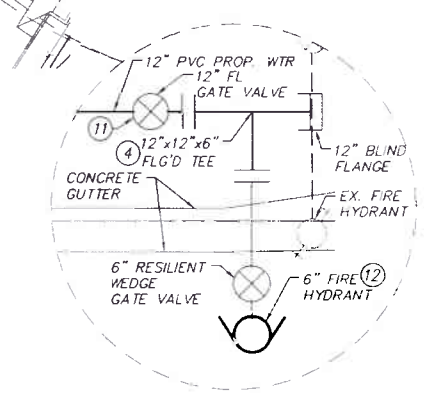

CONSTRUCTION NOTES

1	INSTALL 12" CL350 DUCTILE IRON PIPE & RESTRAINED JOINTS PER EVMWD STD. DWG NO. W-3, W-15
4	INSTALL 12"x12"x6" FLG'D TEE PER EVMWD STD. DWG NO. W-34
11	INSTALL 12" GATE VALVE WITH WELL & RISER PER EVMWD STD. DWG NO. W-13
12	INSTALL NEW FIRE HYDRANT ASSEMBLY PER EVMWD STD. DWG NO. W-7
14	CONTRACTOR TO REMOVE & LEGALLY DISPOSE OF EXISTING 1" STEEL PIPE
15	REMOVE & LEGALLY DISPOSE OF EXISTING WATER PIPE

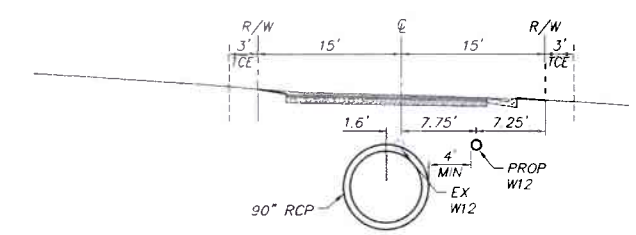

SECTION "A"-"A" @ 15+50

MAIDEN LANE

SCALE: 1"=10'

CONSTRUCTION DRAWING SET DATED 22 JUNE, 2021

SCALE: 1"=20'

0 20 40 60 80

DIGALERT
DIAL BEFORE YOU DIG
TWO WORKING DAYS BEFORE YOU DIG
TOLL FREE DIAL 811
A PUBLIC SERVICE BY UNDERGROUND SERVICE ALERT

VERIFY SCALES
BAR IS ONE INCH ON ORIGINAL DRAWING
0 1
IF NOT ONE INCH ON THIS SHEET, ADJUST ACCORDINGLY

BENCHMARK:
SEE SHEET 1

REGISTERED PROFESSIONAL ENGINEER DONALD W. BERGER No. 28949 CIVIL STATE OF CALIFORNIA

NOTE: WORK CONTAINED WITHIN THESE PLANS SHALL NOT COMMENCE UNTIL AN ENCROACHMENT PERMIT AND/OR A GRADING PERMIT HAS BEEN ISSUED.

THE PRIVATE ENGINEER SIGNING THESE PLANS IS RESPONSIBLE FOR ASSURING THE ACCURACY AND ACCEPTABILITY OF THE DESIGN HEREON. IN THE EVENT OF DISCREPANCIES ARISING AFTER COUNTY APPROVAL OR DURING CONSTRUCTION, THE PRIVATE ENGINEER SHALL BE RESPONSIBLE FOR DEVELOPING AN ACCEPTABLE SOLUTION AND REVISING THE PLANS FOR APPROVAL BY THE COUNTY.

SEWER/WATER/RECYCLED WATER APPROVED BY:
ELSINORE VALLEY MUNICIPAL WATER DISTRICT

GENERAL MANAGER — DATE 8/5/2021

APPROVAL IS VALID FOR 2 YEARS FROM THE DATE SIGNED

DEPARTMENT APPROVALS

ENGINEERING — WATER — WASTEWATER

ENGINEER REV.	BY	DATE	REVISIONS	COUNTY APPR.	DATE

DESIGNED BY: DRAWN BY: CHECKED BY:

COUNTY FILE No. 970-B

COUNTY OF RIVERSIDE
TRANSPORTATION DEPARTMENT

RECMD COUNTY OVERSIGHT ENGINEER — 8/11/21

APPROVES AS TO COMPLIANCE WITH APPLICABLE COUNTY STANDARDS AND PRACTICES.

REGISTRATION # 76450 DATE SIGNED

K&A ENGINEERING LAND PLANNING SURVEYING
Engineering, Inc.
357 N. SHERIDAN STREET
SUITE 117
CORONA, CALIFORNIA 92880
TEL. (951) 279-1800
FAX (951) 279-4380

ENGINEER R.C.E. 28949 — DATE: 8/16/2021

ELSINORE VALLEY MUNICIPAL WATER DISTRICT

WATER IMPROVEMENT PLAN
LINE H STORM DRAIN
WATER PLAN & PROFILE

SCHEDULE ___ COUNTY OF RIVERSIDE I.P. NO.

SCALE: AS SHOWN RES: _____ P.Z. _____

SHEET NO. W3 OF W5 SHTS

COUNTY FILE NO.

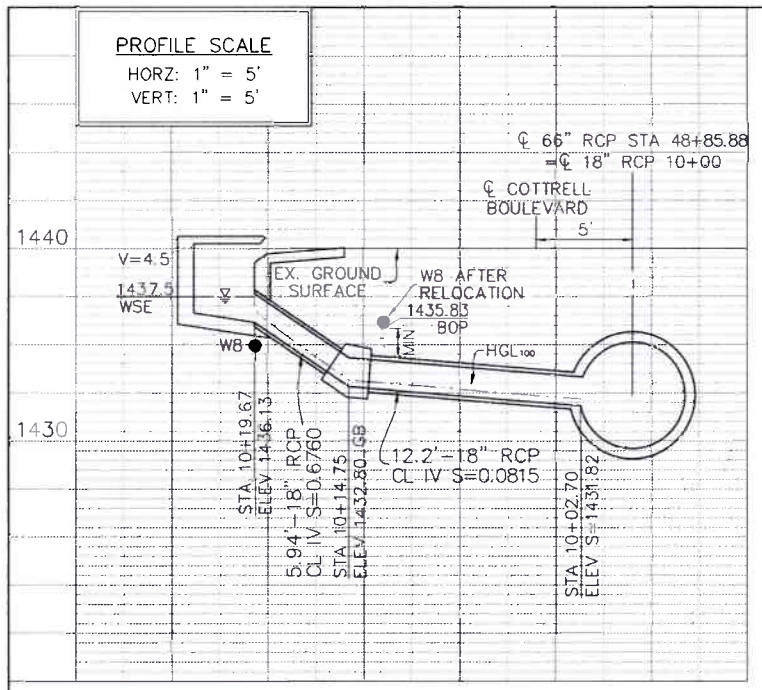

PROFILE

SEE DETAILS HEREON

IN PREPARING THESE PLANS, K&A ENGINEERING, INC DID A THOROUGH SEARCH FOR ALL EXISTING PLANS AND COMPILED A FIELD SURVEY OF ALL ABOVE GROUND APPURTENANCES. K&A ENGINEERING, INC, PROVIDES NO WARRANTY AND ACCEPTS NO RESPONSIBILITY AS TO THE ACTUAL LOCATION OF ANY UNDERGROUND OR ABOVE GROUND UTILITY EITHER INSTALLED BEFORE OR AFTER THE DATE OF THE PREPARATION OF THESE PLANS. CONTRACTOR TO CONTACT UNDERGROUND SERVICE ALERT AT 1-800-227-2600 TO VERIFY LOCATION OF EXISTING UTILITY LOCATIONS AND SHALL CONTACT THE ENGINEER OF RECORD IF THERE IS ANY MATERIAL DISCREPANCY.

CONSTRUCTION NOTES

2	INSTALL 8" C-900 CL235 DR14 PVC PIPE & RESTRAINED JOINTS PER EVMWD STD. DWG NO. W-3, W-15
6	INSTALL 8" 45° BEND, SEE WATER RELOCATION NOTE 8
8	INSTALL 8" FxM ADAPTER
10	INSTALL FLEXIBLE PIPE TRANSITION COUPLING, FUSION BONDED EXPOXY COATED WITH STAINLESS STEEL HARDWARE
15	REMOVE & LEGALLY DISPOSE OF EXISTING WATER PIPE

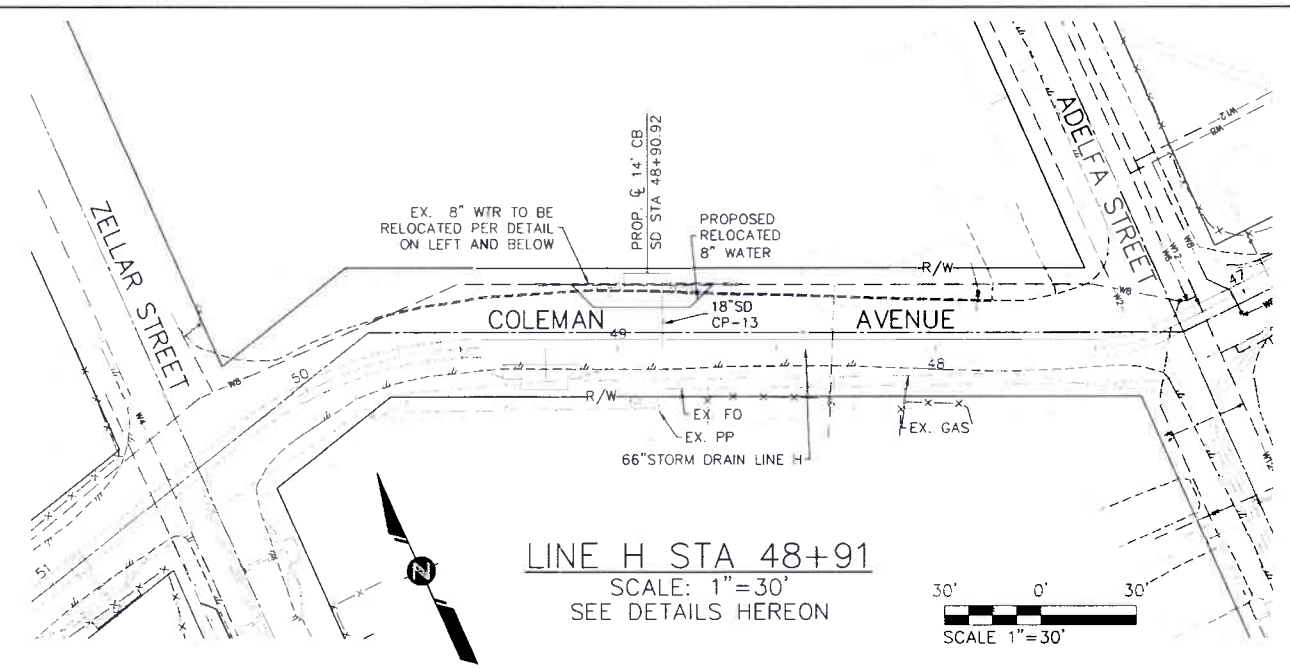

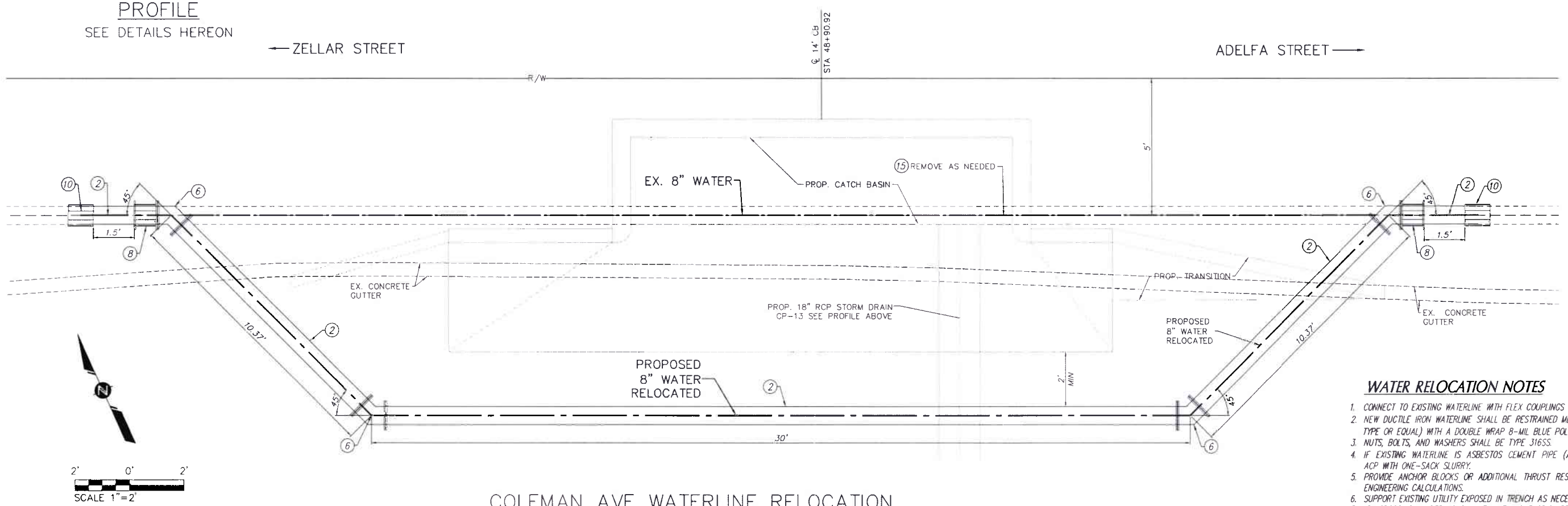

COLEMAN AVE WATERLINE RELOCATION

LINE H STA 48+91

SCALE: 1"=2'

WATER RELOCATION NOTES

1. CONNECT TO EXISTING WATERLINE WITH FLEX COUPLINGS OR M.J.
2. NEW DUCTILE IRON WATERLINE SHALL BE RESTRAINED MECHANICAL JOINTS ("MEGA-LUG" TYPE OR EQUAL) WITH A DOUBLE WRAP 8-MIL BLUE POLYETHYLENE WRAP.
3. NUTS, BOLTS, AND WASHERS SHALL BE TYPE 316SS.
4. IF EXISTING WATERLINE IS ASBESTOS CEMENT PIPE (ACP), BACKFILL TRENCH UNDER ACP WITH ONE-SACK SLURRY.
5. PROVIDE ANCHOR BLOCKS OR ADDITIONAL THRUST RESTRAINTS AS REQUIRED. SUBMIT ENGINEERING CALCULATIONS.
6. SUPPORT EXISTING UTILITY EXPOSED IN TRENCH AS NECESSARY TO PROTECT IN PLACE.
7. IF CROSSING UNDER GAS LINE WITH CATHODIC PROTECTION, BOND JOINTS AND CONSTRUCT CP TEST STATION AS DIRECTED BY DISTRICT ENGINEER.
8. 11-1/4 AND 22-1/2 DEGREE BENDS MAY BE USED WHERE FIELD CONDITIONS WARRANT THEIR USE PENDING APPROVAL BY DISTRICT ENGINEER.
9. THE CONTRACTOR SHALL REMOVE AND LEGALLY DISPOSE OF EXISTING ASBESTOS CEMENT PIPE (ACP). ALL ACP SHALL BE REMOVED IN WHOLE PIPE LENGTHS. NO CUTTING OF ACP SHALL BE ALLOWED. CONTRACTOR SHALL BE RESPONSIBLE FOR MAINTAINING PROPERLY FILLED OUT HAZARDOUS WASTE MANIFEST LOGS & DISPOSING OF ACP IN CERTIFIED LANDFILL. GENERATOR COPIES OF LOGS SHALL BE RETURNED TO THE DISTRICT FOR THEIR RECORD.

CONSTRUCTION DRAWING SET DATED 22 JUNE, 2021

DIGALERT
DIAL BEFORE YOU DIG — TWO WORKING DAYS BEFORE YOU DIG
TOLL FREE DIAL 811
A PUBLIC SERVICE BY UNDERGROUND SERVICE ALERT

VERIFY SCALES
BAR IS ONE INCH ON ORIGINAL DRAWING
0 1
IF NOT ONE INCH ON THIS SHEET, ADJUST ACCORDINGLY

BENCHMARK: SEE SHEET 1

REGISTERED PROFESSIONAL ENGINEER DONALD W BERGH No 28949 CIVIL STATE OF CALIFORNIA

NOTE: WORK CONTAINED WITHIN THESE PLANS SHALL NOT COMMENCE UNTIL AN ENCROACHMENT PERMIT AND/OR A GRADING PERMIT HAS BEEN ISSUED.

THE PRIVATE ENGINEER SIGNING THESE PLANS IS RESPONSIBLE FOR ASSURING THE ACCURACY AND ACCEPTABILITY OF THE DESIGN HEREON. IN THE EVENT OF DISCREPANCIES ARISING AFTER COUNTY APPROVAL OR DURING CONSTRUCTION, THE PRIVATE ENGINEER SHALL BE RESPONSIBLE FOR DETERMINING AN ACCEPTABLE SOLUTION AND REVISING THE PLANS FOR APPROVAL BY THE COUNTY.

SEWER/WATER/RECYCLED WATER APPROVED BY:
ELSINORE VALLEY MUNICIPAL WATER DISTRICT
8/5/2021
GENERAL MANAGER — DATE
APPROVAL IS VALID FOR 2 YEARS FROM THE DATE SIGNED
DEPARTMENT APPROVALS
ENGINEERING — WATER — WASTEWATER

ENGINEER REV.	BY	DATE	REVISIONS	COUNTY APPR.	DATE

DESIGNED BY: DRAWN BY: CHECKED BY:

COUNTY FILE No. 970-B
COUNTY OF RIVERSIDE TRANSPORTATION DEPARTMENT
RECMD COUNTY OVERSIGHT ENGINEER 8/11/21
APPROVES AS TO COMPLIANCE WITH APPLICABLE COUNTY STANDARDS AND PRACTICES.
REGISTRATION # 76450 DATE SIGNED

K&A Engineering, Inc.
ENGINEERING LAND PLANNING SURVEYING
357 N. SHERIDAN STREET SUITE 117 CORONA, CALIFORNIA 92880 TEL. (951) 279-1800 FAX (951) 279-4380
ENGINEER R.C.E. 28949 DATE: 8/16/2021

ELSINORE VALLEY MUNICIPAL WATER DISTRICT
WATER IMPROVEMENT PLAN
LINE H STORM DRAIN
WATER RELOCATION DETAILS
SCHEDULE ___ COUNTY OF RIVERSIDE I.P. NO.
SCALE: AS SHOWN RES: _____ P.Z.: _____

SHEET NO. W4 OF W5 SHTS
COUNTY FILE NO.

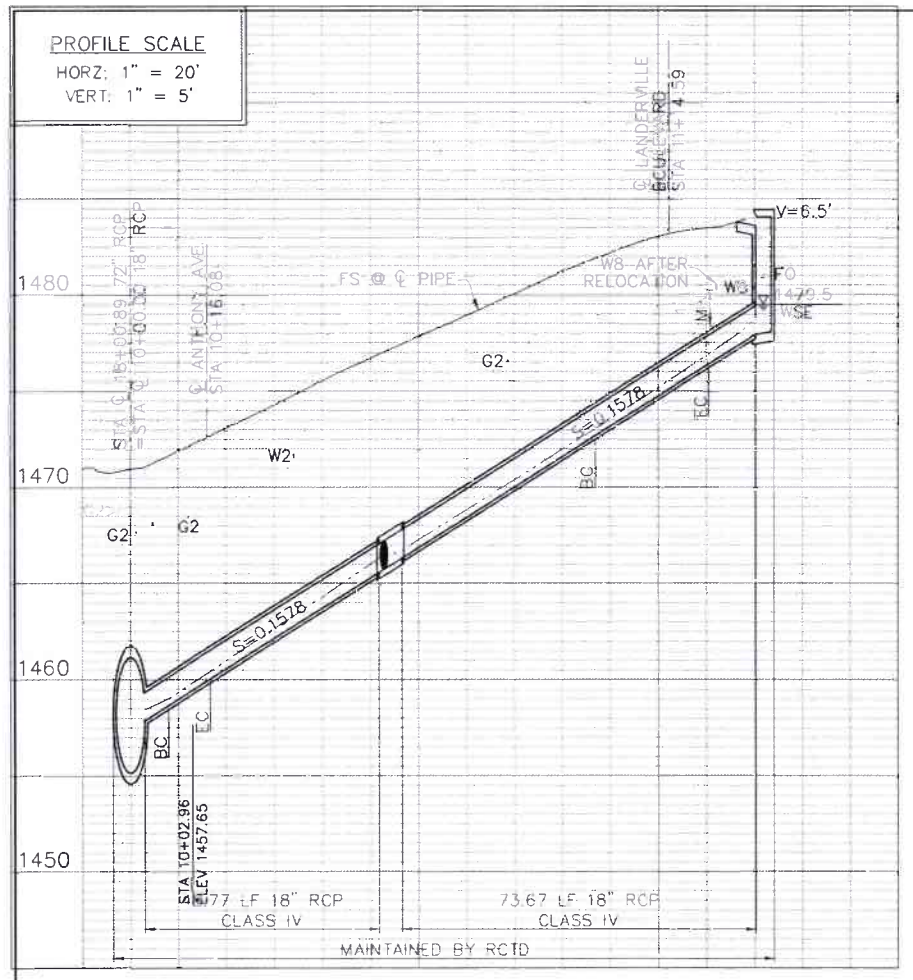

PROFILE

SEE DETAILS HEREON

IN PREPARING THESE PLANS, K&A ENGINEERING, INC DID A THOROUGH SEARCH FOR ALL EXISTING PLANS AND COMPILED A FIELD SURVEY OF ALL ABOVE GROUND APPURTENANCES. K&A ENGINEERING, INC. PROVIDES NO WARRANTY AND ACCEPTS NO RESPONSIBILITY AS TO THE ACTUAL LOCATION OF ANY UNDERGROUND OR ABOVE GROUND UTILITY EITHER INSTALLED BEFORE OR AFTER THE DATE OF THE PREPARATION OF THESE PLANS. CONTRACTOR TO CONTACT UNDERGROUND SERVICE ALERT AT 1-800-227-2600 TO VERIFY LOCATION OF EXISTING UTILITY LOCATIONS AND SHALL CONTACT THE ENGINEER OF RECORD IF THERE IS ANY MATERIAL DISCREPANCY.

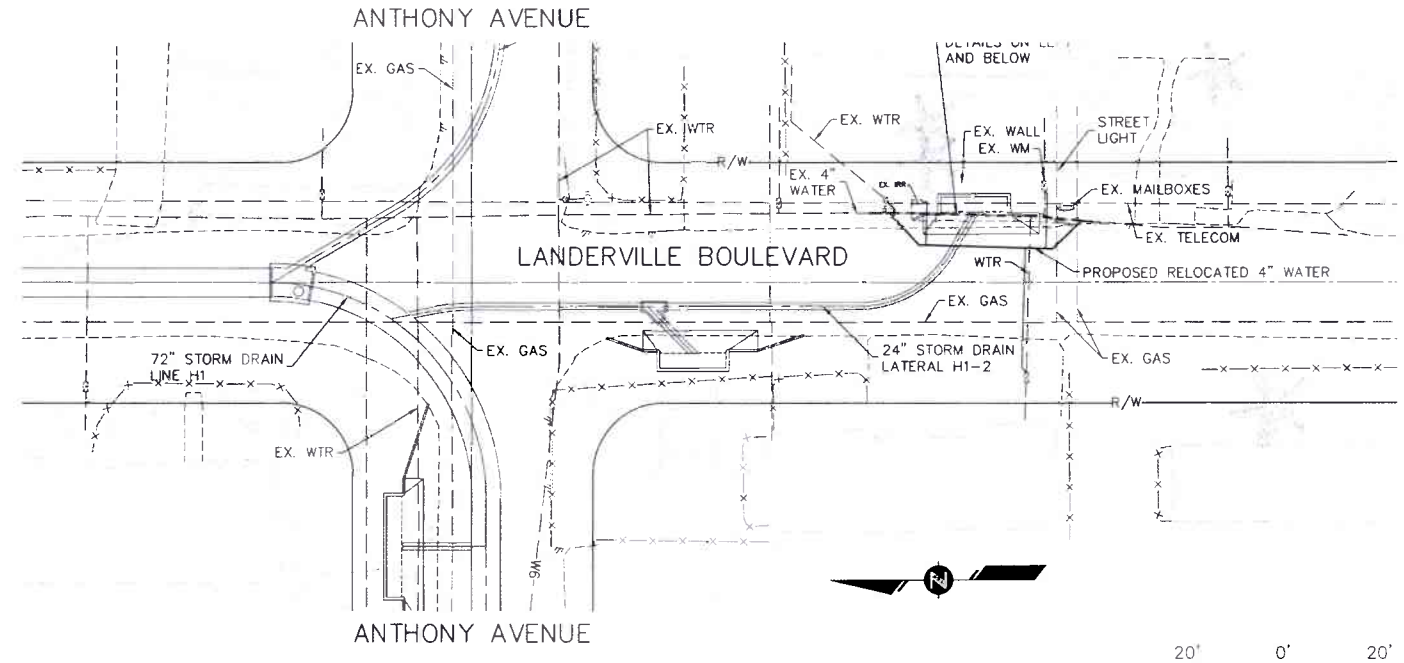

LATERAL H1-2 STA 11+30.19

SCALE: 1"=20'
SEE DETAILS HEREON

20' 0' 20'
SCALE 1"=20'

CONSTRUCTION NOTES

2	INSTALL 8" C-900 CL235 DR14 PVC PIPE & RESTRAINED JOINTS PER EVMWD STD DWG NO. W-3, W-15
6	INSTALL 8" 45° BEND. SEE WATER RELOCATION NOTE 8
7	INSTALL 4"x8" FLG'D REDUCER
10	INSTALL FLEXIBLE PIPE TRANSITION COUPLING, FUSION BONDED EXPOXY COATED WITH STAINLESS STEEL HARDWARE
13	REMOVE EXISTING WATER SERVICE & INSTALL 1" WATER SERVICE CONNECTION PER EVMWD STD. DWG NO. W-9 (RECONNECT TO EXISTING METER)
15	REMOVE & LEGALLY DISPOSE OF EXISTING WATER PIPE

WATER RELOCATION NOTES

1. CONNECT TO EXISTING WATERLINE WITH FLEX COUPLINGS OR M.J.
2. DUCTILE IRON FITTINGS SHALL BE RESTRAINED WITH MECHANICAL JOINTS ("MEGA-LUG" TYPE OR EQUAL) WITH A DOUBLE WRAP 8-MIL BLUE POLYETHYLENE WRAP.
3. NUTS, BOLTS, AND WASHERS SHALL BE TYPE 316SS.
4. IF EXISTING WATERLINE IS ASBESTOS CEMENT PIPE (ACP), BACKFILL TRENCH UNDER ACP WITH ONE-SACK SLURRY.
5. PROVIDE ANCHOR BLOCKS OR ADDITIONAL THRUST RESTRAINTS AS REQUIRED. SUBMIT ENGINEERING CALCULATIONS.
6. SUPPORT EXISTING UTILITY EXPOSED IN TRENCH AS NECESSARY TO PROTECT IN PLACE.
7. IF CROSSING UNDER GAS LINE WITH CATHODIC PROTECTION, BOND JOINTS AND CONSTRUCT CP TEST STATION AS DIRECTED BY DISTRICT ENGINEER
8. 11-1/4 AND 22-1/2 DEGREE BENDS MAY BE USED WHERE FIELD CONDITIONS WARRANT THEIR USE PENDING APPROVAL BY DISTRICT ENGINEER.
9. THE CONTRACTOR SHALL REMOVE AND LEGALLY DISPOSE OF EXISTING ASBESTOS CEMENT PIPE (ACP). ALL ACP SHALL BE REMOVED IN WHOLE PIPE LENGTHS. NO CUTTING OF ACP SHALL BE ALLOWED. CONTRACTOR SHALL BE RESPONSIBLE FOR MAINTAINING PROPERLY FILLED OUT HAZARDOUS WASTE MANIFEST LOGS & DISPOSING OF ACP IN CERTIFIED LANDFILL. GENERATOR COPIES OF LOGS SHALL BE RETURNED TO THE DISTRICT FOR THEIR RECORD.

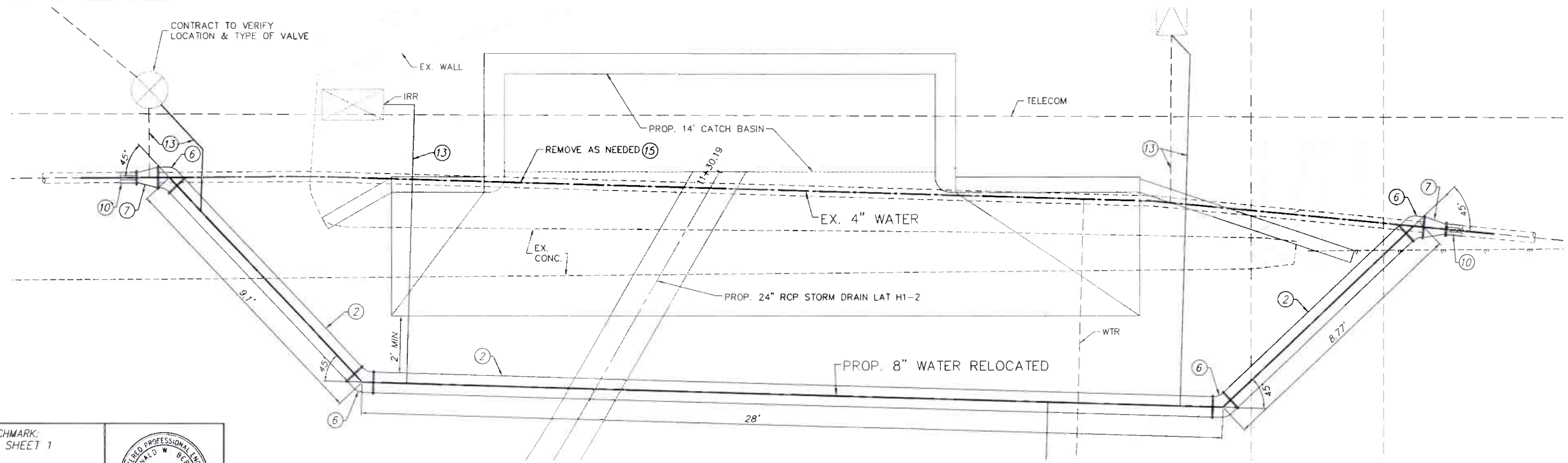

LANDERVILLE BLVD WATERLINE RELOCATION
LATERAL H1-2 STA 11+30.19

SCALE: 1"=2'

2' 0' 2'
SCALE 1"=2'

CONSTRUCTION DRAWING SET DATED 22 JUNE, 2021

DIGALERT — DIAL BEFORE YOU DIG — TWO WORKING DAYS BEFORE YOU DIG — TOLL FREE DIAL 811 — A PUBLIC SERVICE BY UNDERGROUND SERVICE ALERT

VERIFY SCALES: BAR IS ONE INCH ON ORIGINAL DRAWING (0 — 1). IF NOT ONE INCH ON THIS SHEET, ADJUST ACCORDINGLY

BENCHMARK: SEE SHEET 1

REGISTERED PROFESSIONAL ENGINEER — DONALD W. BERGH — No. 28949 — CIVIL — STATE OF CALIFORNIA

NOTE: WORK CONTAINED WITHIN THESE PLANS SHALL NOT COMMENCE UNTIL AN ENCROACHMENT PERMIT AND/OR A GRADING PERMIT HAS BEEN ISSUED.

THE PRIVATE ENGINEER SIGNING THESE PLANS IS RESPONSIBLE FOR ASSURING THE ACCURACY AND ACCEPTABILITY OF THE DESIGN HEREON. IN THE EVENT OF DISCREPANCIES ARISING AFTER COUNTY APPROVAL OR DURING CONSTRUCTION, THE PRIVATE ENGINEER SHALL BE RESPONSIBLE FOR DETERMINING AN ACCEPTABLE SOLUTION AND REVISING THE PLANS FOR APPROVAL BY THE COUNTY.

SEWER/WATER/RECYCLED WATER APPROVED BY: ELSINORE VALLEY MUNICIPAL WATER DISTRICT — 8/5/2021
GENERAL MANAGER — DATE
APPROVAL IS VALID FOR 2 YEARS FROM THE DATE SIGNED
DEPARTMENT APPROVALS: ENGINEERING — WATER — WASTEWATER

ENGINEER REV.	BY	DATE	REVISIONS	COUNTY APPR.	DATE

DESIGNED BY: DRAWN BY: CHECKED BY:

COUNTY FILE No. 970-B

COUNTY OF RIVERSIDE TRANSPORTATION DEPARTMENT
RECMD — COUNTY OVERSIGHT ENGINEER — 8/11/21
APPROVES AS TO COMPLIANCE WITH APPLICABLE COUNTY STANDARDS AND PRACTICES.
REGISTRATION # 76450 — DATE SIGNED

K&A Engineering, Inc. — ENGINEERING, LAND PLANNING, SURVEYING — 357 N. SHERIDAN STREET, SUITE 117, CORONA, CALIFORNIA 92880, TEL. (951) 279-1800, FAX (951) 279-4380
ENGINEER R.C.E. 28949 — DATE: 8/16/2021

ELSINORE VALLEY MUNICIPAL WATER DISTRICT
WATER IMPROVEMENT PLAN
LINE H STORM DRAIN
WATER RELOCATION DETAILS

SCHEDULE ___ COUNTY OF RIVERSIDE LP. NO.
SCALE: AS SHOWN RES: _____ P.Z.: _____

SHEET NO. W5 OF W5 SHTS
COUNTY FILE NO.

PCMS PLACEMENT

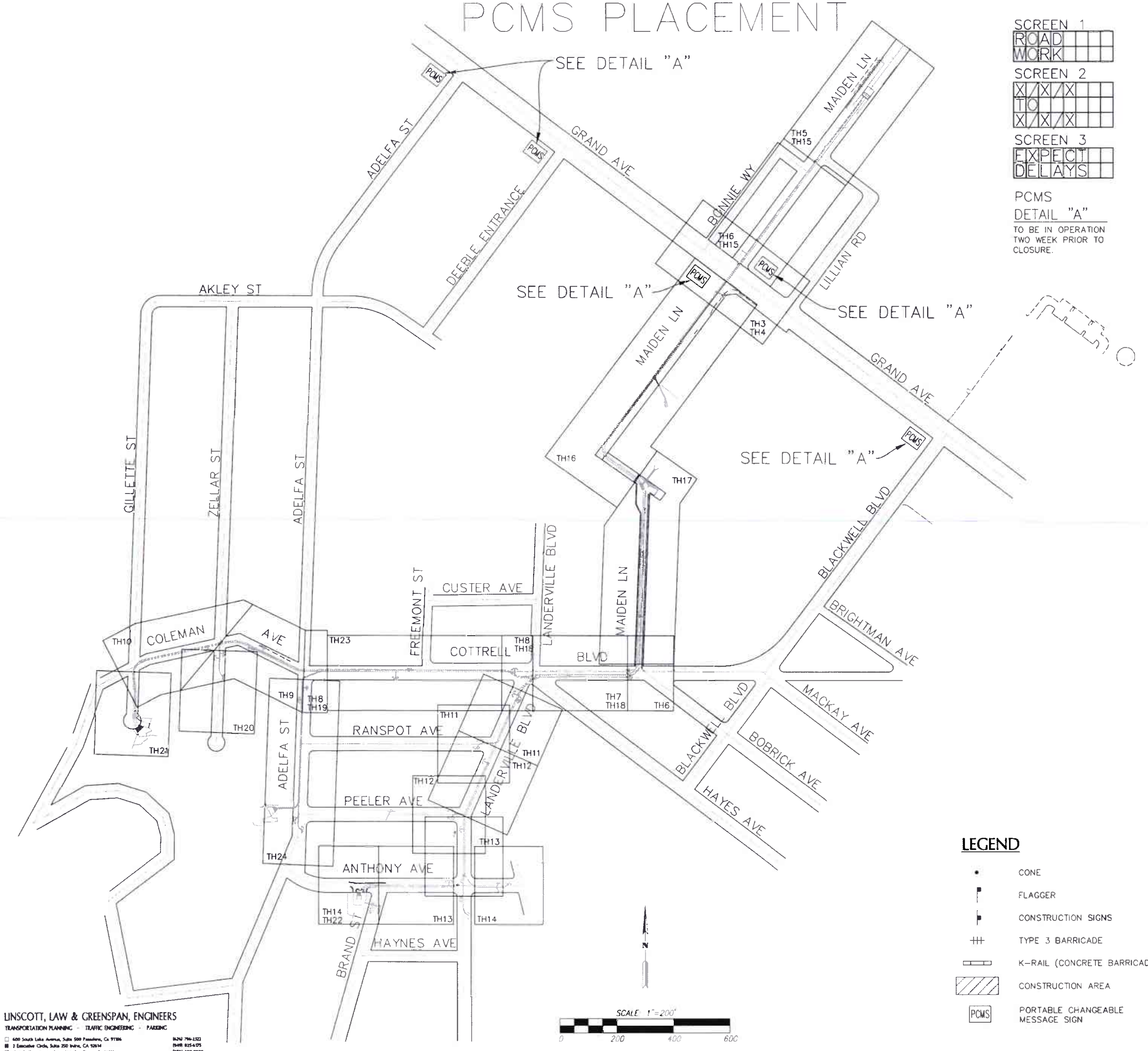

SCREEN 1
ROAD
WORK

SCREEN 2
X/X/X
TO
X/X/X

SCREEN 3
EXPECT
DELAYS

PCMS
DETAIL "A"
TO BE IN OPERATION TWO WEEK PRIOR TO CLOSURE.

LEGEND

- CONE
- FLAGGER
- CONSTRUCTION SIGNS
- TYPE 3 BARRICADE
- K-RAIL (CONCRETE BARRICADE)
- CONSTRUCTION AREA
- PCMS — PORTABLE CHANGEABLE MESSAGE SIGN

RIVERSIDE COUNTY FLOOD CONTROL AND WATER CONSERVATION DISTRICT (RCFC & WCD) GENERAL TRAFFIC CONTROL NOTES:

1. THESE ARE THE MINIMUM TRAFFIC CONTROL REQUIREMENTS. ADDITIONAL TRAFFIC CONTROL MAY BE REQUIRED TO FACILITATE PUBLIC SAFETY AND TRAFFIC FLOW IF DEEMED NECESSARY BY THE ENGINEER OR RIVERSIDE COUNTY TRANSPORTATION DEPARTMENT.
2. ALL TRAFFIC CONTROL DEVICES SHALL CONFORM TO THE FHWA'S MANUAL ON UNIFORM TRAFFIC CONTROL DEVICES (MUTCD) 2014 AND THE MUTCD 2014 (REV 3) CALIFORNIA SUPPLEMENT, LATEST ADDITION AND WITH ALL OTHER APPLICABLE FEDERAL, STATE AND LOCAL LAWS.
3. SPECIAL CONSTRUCTION SIGNS SHALL BE MANUFACTURED USING MINIMUM 3" UPPER CASE BLACK LETTERS AND A BLACK BORDER ON AN ORANGE REFLECTIVE BACKGROUND.
4. FLASHING YELLOW BEACONS, TYPE B, SHALL ILLUMINATE ALL W20 SIGNS AND TYPE III BARRICADES USED AT THE WORK AREA DURING HOURS OF DARKNESS.
5. ALL TRENCHES SHALL BE BACK FILLED OR PLATED AT THE END OF EACH WORK DAY. PLATES SHALL BE PLACED FLUSH WITH EXISTING ASPHALT OR SO AS TO CREATE A SMOOTH DRIVING SURFACE TO THE SATISFACTION OF THE RESIDENT ENGINEER.
6. PRIVATE PROPERTY AND EMERGENCY ACCESS SHALL BE MAINTAINED AT ALL TIMES EXCEPT AS PERMITTED BY RESIDENT ENGINEER
7. MINIMUM LANE WIDTH TO BE 12 FEET OR AS DIRECTED BY THE RESIDENT ENGINEER.
8. ADDITIONAL "STOP" SIGNS MAY BE NEEDED IF EQUIPMENT/WORKERS ARE BLOCKING THEM FROM VIEW.
9. CONTRACTOR SHALL POST TEMPORARY "NO-PARKING" SIGNS ALONG THE SIDE OF THE STREET TO BE AFFECTED BY THIS TRAFFIC CONTROL PLAN AT LEAST 48 HOURS PRIOR TO COMMENCEMENT OF CONSTRUCTION ACTIVITIES.
10. CONTRACTOR SHALL MAINTAIN ACCESS TO RESIDENTIAL DRIVEWAYS WITHIN CONSTRUCTION WORK AREA AT ALL TIMES

RIVERSIDE COUNTY FLOOD CONTROL AND WATER CONSERVATION DISTRICT (RCFC & WCD) GENERAL NOTES:

T1. NOTHING IN THESE NOTES OR PLANS SHALL RELIEVE THE CONTRACTOR OF THE RESPONSIBILITY FOR JOB SITE CONDITION DURING THE COURSE OF CONSTRUCTION OF THE PROJECT, INCLUDING SAFETY OF ALL PERSONS AND PROPERTY, AND THAT THIS REQUIREMENT SHALL APPLY CONTINUOUSLY AND NOT BE LIMITED TO WORKING HOURS.

T2. DURING THE PERIOD OF CONSTRUCTION, THE CONTRACTOR SHALL FURNISH, ERECT AND MAINTAIN SIGNING, STRIPING, BARRICADES AND OTHER SAFETY MEASURES AS DIRECTED BY THE ENGINEER.

T3. ALL EXISTING FACILITIES, INCLUDING SIGNING, STRIPING, MARKING, SHALL BE RESTORED TO THE ORIGINAL CONDITION AND LOCATION AT THE END OF THE CONSTRUCTION PERIOD.

T4. THE LOCATION OF ALL SIGNS SHOWN ARE ONLY APPROXIMATE AND THE EXACT LOCATIONS SHALL BE DETERMINED IN THE FIELD BY THE CONTRACTOR. ADDITIONAL SIGNING MAY BE NECESSARY AS DETERMINED BY THE ENGINEER IN THE FIELD.

T5. THE CONTRACTOR SHALL PROVIDE SAFE AND CONTINUOUS PASSAGE OF LOCAL PEDESTRIAN AND VEHICLE TRAFFIC AT ALL TIMES. WHEN ENTERING OR LEAVING ROADWAYS CARRYING PUBLIC TRAFFIC, THE CONTRACTOR'S EQUIPMENT, WHETHER EMPTY OR LOADED, SHALL IN ALL CASES YIELD TO PUBLIC TRAFFIC.

T6. THE CONTRACTOR SHALL NOTIFY THE ENGINEER, SHERIFF AND FIRE DEPARTMENT OF RIVERSIDE COUNTY OF THE PROPOSED RESTRICTIONS PLACED ON TRAFFIC MOVEMENTS PRIOR TO CONSTRUCTION. IT IS THE CONTRACTOR'S RESPONSIBILITY TO PROVIDE INFORMATION REGARDING ALTERNATIVE ROUTES FOR ALL EMERGENCY VEHICLES (POLICE, FIRE AND AMBULANCE) THROUGH AND AROUND THE VARIOUS WORK ZONES.

T7. THE CONTRACTOR MAY SUBMIT FOR MODIFICATION TO THE ROAD CLOSURE & DETOUR PLAN SUBJECT TO THE APPROVAL OF THE COUNTY OF RIVERSIDE. SUCH PLAN FOR MODIFICATION SHALL BE PREPARED BY AN R.C.E. OR TRAFFIC ENGINEER FOR REVIEW, COMMENT OR APPROVAL BY THE COUNTY OF RIVERSIDE.

RCTD TC GENERAL NOTES - SEE SHEET 2

SIGN LEGEND - SEE SHEET 2

SHEET INDEX

CONSTRUCTION DRAWING SET DATED 22 JUNE, 2021

LINSCOTT, LAW & GREENSPAN, ENGINEERS
TRANSPORTATION PLANNING · TRAFFIC ENGINEERING · PARKING
600 South Lake Avenue, Suite 500 Pasadena, Ca 91106 (626) 796-2322
2 Executive Circle, Suite 250 Irvine, CA 92614 (949) 825-6175
4542 Ruffner Street, Suite 100, San Diego, Ca 92111 (858) 300-8800

K&A Engineering, Inc.
ENGINEERING · LAND PLANNING · SURVEYING
357 N. SHERIDAN STREET
SUITE 117
CORONA, CALIFORNIA 92880
TEL. (951) 279-1800
FAX (951) 279-4380

Donald Berk 4/20/2020
ENGINEER R.C.E. 28949 DATE

REGISTERED PROFESSIONAL ENGINEER DONALD W. BERK No. 28949 CIVIL STATE OF CALIFORNIA

COUNTY OF RIVERSIDE
TRANSPORTATION DEPARTMENT
REQMD COUNTY OVERSIGHT ENGINEER
8/11/21
APPROVES AS TO COMPLIANCE WITH APPLICABLE COUNTY STANDARDS AND PRACTICES
REGISTRATION # 76450 DATE SIGNED

Don't Dig Until You Call U.S.A. Toll Free
DIAL 811
for the location of buried utility lines.
Don't disrupt vital services.
BURIED CABLE
TWO WORKING DAYS BEFORE YOU DIG

BENCH MARK
NAD 83 – COH 88 CCS83, ZONE 6
RCFC Z 15502
SET MAG NAIL W/ RCFC WCD TAG FLUSH
E 6,226,565.52 N 2,177,350.50
DATED: 2011 ELEV: 1,401.46

REF	REVISIONS	APPR	DATE

RIVERSIDE COUNTY FLOOD CONTROL AND WATER CONSERVATION DISTRICT
DESIGNED BY: K&A ENGINEERING
DRAWN BY: ADA
DATE DRAWN: JUNE 2021
PB NUMBER: 226078
RECOMMENDED FOR APPROVAL BY: DATE 7-27-2021
APPROVED BY: DATE 8/4/2021

FOR BIDDING PURPOSES ONLY

LAKELAND VILLAGE
LINE H
TRAFFIC HANDLING PLAN
TITLE SHEET & INDEX MAP

PROJECT NO 3-0-00020
DRAWING NO 3-0207
SHEET NO TH1 OF TH25

RIVERSIDE COUNTY TRANSPORTATION DEPARTMENT (RCTD)
TRAFFIC CONTROL GENERAL NOTES:

1. CONTRACTOR SHALL FURNISH AND INSTALL TEMPORARY TRAFFIC CONTROL DEVICES, INCLUDING STRIPING AND PAVEMENT MARKINGS, CONFORMING TO 2014 CALIFORNIA MANUAL ON UNIFORM TRAFFIC CONTROL DEVICES, 2018 CALTRANS STANDARD PLANS AND STANDARD SPECIFICATIONS, AND THE LATEST EDITION OF COUNTY OF RIVERSIDE STANDARDS.

2. CONTRACTOR SHALL MAINTAIN EXISTING PEDESTRIAN ACCESS OR PROVIDE ALTERNATE PEDESTRIAN ACCESS THROUGH OR AROUND THE WORK ZONE CONFORMING TO 2019 CALIFORNIA BUILDING CODES, 2010 ADA STANDARDS FOR ACCESSIBLE DESIGN BY DEPARTMENT OF JUSTICE, AND THE LATEST EDITION OF COUNTY OF RIVERSIDE STANDARDS.

3. CONTRACTOR SHALL OBTAIN APPROPRIATE ENCROACHMENT PERMIT(S) PRIOR TO BEGIN WORK FROM JURISDICTION(S) WHERE ITS RIGHT-OF-WAY WILL BE AFFECTED BY THE ROAD CONSTRUCTION OR TEMPORARY TRAFFIC CONTROL.

4. CONTRACTOR'S HOURS OF OPERATION SHALL BE LIMITED TO THE HOURS BETWEEN 7 AM AND 6 PM, MONDAY TO FRIDAY WITH LANE CLOSURE PERMITTED BETWEEN 9 AM AND 4 PM UNLESS NOTED OTHERWISE ON PLAN OR AS DIRECTED BY THE ENGINEER. CONTRACTOR SHALL DEPLOY FLASHING ARROW BOARD(S) WHEN MERGING OR SHIFTING TRAFFIC ON MAJOR STREETS AND AS REQUIRED BY THE ENGINEER.

5. CONTRACTOR SHALL DEPLOY PCMS(S) AS SHOWN ON PLAN OR AS DIRECTED BY THE ENGINEER AT LEAST: 1) SEVEN (7) CALENDAR DAYS PRIOR TO ROAD CONSTRUCTION; 2) FOURTEEN (14) CALENDAR DAYS PRIOR TO ROAD CLOSURE; OR 3) NOTED OTHERWISE ON PLAN OR AS DIRECTED BY THE ENGINEER.

6. CONTRACTOR SHALL NOTIFY: 1) PROPERTY OWNERS ADJACENT TO WORK ZONE AT LEAST SEVEN (7) CALENDAR DAYS PRIOR TO BEGIN WORK; 2) RIVERSIDE COUNTY FIRE AND SHERIFF DEPARTMENT, CALIFORNIA HIGHWAY PATROL, TRANSIT OPERATORS, AND PROPERTY OWNERS AFFECTED BY THE ROAD CLOSURE AT LEAST FOURTEEN (14) CALENDAR DAYS PRIOR TO ROAD CLOSURE; AND 3) TRANSIT OPERATORS WHERE EXISTING TRANSIT STOP(S) HAS TO BE RELOCATED OR SHUT DOWN TEMPORARILY DUE TO CONSTRUCTION AT LEAST FOURTEEN (14) CALENDAR DAYS PRIOR TO BEGIN WORK.

7. CONTRACTOR SHALL COORDINATE WITH COUNTY TRAFFIC OPERATIONS AT (951) 955-6894 AT LEAST THREE (3) WORKING DAYS IN ADVANCE OF ANY WORK AFFECTING NORMAL TRAFFIC SIGNAL OPERATIONS OR REQUIRING ADJUSTMENTS TO TRAFFIC SIGNAL OPERATIONS BEFORE EACH CONSTRUCTION STAGES. CONTRACTOR SHALL: 1) DEPLOY TEMPORARY VIDEO DETECTION CAMERA(S) WHERE TRAFFIC SIGNAL DETECTOR LOOPS WILL BE IMPAIRED DURING CONSTRUCTION; AND 2) RE-INSTALL ALL DAMAGED TRAFFIC SIGNAL DETECTOR LOOPS PER COUNTY STANDARD WITHIN SEVEN (7) CALENDAR DAYS FOLLOWING COMPLETION OF FINAL PAVING. CONTRACTOR CAN REMOVE THE TEMPORARY VIDEO DETECTION CAMERA(S) AFTER COUNTY HAS TESTED AND ACCEPTED THE NEW TRAFFIC SIGNAL DETECTOR LOOPS.

8. CONTRACTOR SHALL POST TEMPORARY "NO STOPPING ANY TIME" SIGNS AT LEAST THREE (3) WORKING DAYS PRIOR TO BEGIN WORK WITH DATES AND TIME LIMITS IDENTIFIED ALONG THE CURBSIDE WHERE PARKING IS ALLOWED AND WOULD IMPEDE ROADWAY CONSTRUCTION OR IMPLEMENTING TEMPORARY TRAFFIC CONTROL DEVICES.

9. CONTRACTOR SHALL FURNISH AND INSTALL TEMPORARY TRAFFIC CONTROL DEVICES, INCLUDING STRIPING AND MARKINGS, AS SHOWN ON PLANS, AND INSTALL ANY ADDITIONAL TEMPORARY TRAFFIC CONTROL DEVICES DEEMED NECESSARY BY THE ENGINEER TO ENSURE SAFE MOVEMENTS THROUGH AND AROUND THE WORK ZONE.

10. CONTRACTOR SHALL COVER SIGNS AND REMOVE STRIPING AND MARKINGS BY GRINDING THAT ARE IN CONFLICT WITH THE TEMPORARY TRAFFIC CONTROL DEVICES PRIOR TO BEGIN WORK.

11. CONTRACTOR SHALL MAINTAIN ACCESS TO DRIVEWAYS, ALLEYS AND SIDE STREETS AT ALL TIMES.

12. CONTRACTOR SHALL PROVIDE A MINIMUM OF 12' WIDE TRAFFIC LANE(S) UNLESS NOTED OTHERWISE ON PLAN WITH AT LEAST: 1) 5' CLEARANCE BETWEEN ETW AND EDGE OF OPEN EXCAVATION; AND 2) 2' CLEARANCE BETWEEN ETW AND ANY VERTICAL OBSTRUCTION.

13. CONTRACTOR SHALL EQUIP BARRICADES WITH TYPE B FLASHING BEACONS WHEN: 1) CONDUCTING NIGHT TIME OPERATION; 2) BARRICADES WERE KEPT IN PLACE OVERNIGHT DURING NON-WORKING HOURS; AND 3) AS DIRECTED BY THE ENGINEER.

14. CONTRACTOR SHALL BACKFILL OR STEEL-PLATE, USING ANTI-SKID PLATE WITH 4:1 BEVELED EDGE, OVER THE OPEN TRENCHES BEFORE OPENING THE STREET TO TRAFFIC. CONTRACTOR SHALL INSTALL: 1) C27(CA), "OPEN TRENCH", SIGNS WHENEVER OPEN EXCAVATIONS EXIST ADJACENT TO TRAVEL LANE; AND 2) INSTALL W8-24, "STEEL PLATE AHEAD", SIGNS WHEN STEEL PLATES ARE DEPLOYED. NO OPEN TRENCH SHALL EXCEED 300' ADJACENT TO TRAVEL LANE.

15. CONTRACTOR SHALL: 1) MAINTAIN TEMPORARY TRAFFIC CONTROL DEVICES 24 HOURS PER DAY AND 7 DAYS PER WEEK; AND 2) REPAIR STRIPING AND PAVEMENT MARKINGS DAMAGED OR WORN OUT AT THE END OF EACH WORKING DAY OR AS DIRECTED BY THE ENGINEER.

16. CONTRACTOR SHALL REMOVE TEMPORARY TRAFFIC CONTROL DEVICES COMPLETELY, INCLUDING STRIPING AND MARKINGS, WHICH ARE NOT APPLICABLE FOLLOWING COMPLETION OF EACH CONSTRUCTION STAGE BEFORE INSTALLING NEW TEMPORARY TRAFFIC CONTROL DEVICES FOR NEXT STAGE OR RESTORING PERMANENT STRIPING AND PAVEMENT MARKINGS TO PRE-CONSTRUCTION CONDITIONS OR PER APPROVED SIGNING AND STRIPING PLAN FOLLOWING COMPLETION OF THE WORK.

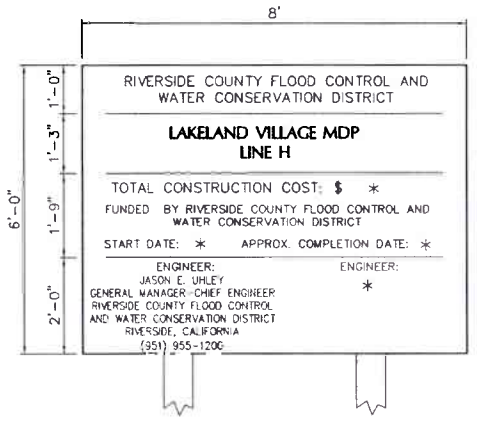

TYPICAL PROJECT SIGN

NUMBER OF SIGNS AND LOCATION TO BE DETERMINED BY RCFC & WCD IN ACCORDANCE WITH PROJECT SPECIFICATIONS

SIGN LEGEND

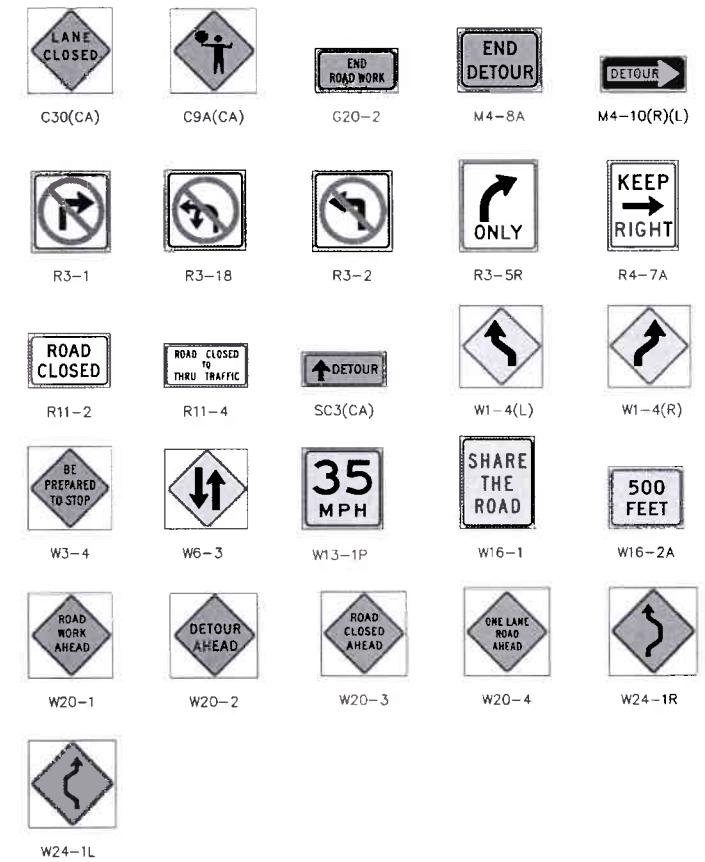

CONSTRUCTION DRAWING SET DATED 22 JUNE, 2021

LINSCOTT, LAW & GREENSPAN, ENGINEERS
TRANSPORTATION PLANNING · TRAFFIC ENGINEERING · PARKING
600 South Lake Avenue, Suite 500 Pasadena, Ca 91106 (626) 796-2322
2 Executive Circle, Suite 250 Irvine, CA 92614 (949) 825-6175
4542 Ruffner Street, Suite 100, San Diego, Ca 92111 (858) 300-8800

K&A Engineering, Inc.
ENGINEERING
LAND PLANNING
SURVEYING
357 N. SHERIDAN STREET
SUITE 117
CORONA, CALIFORNIA 92880
TEL. (951) 279-1800
FAX (951) 279-4380

Donald Berst 4/20/2020
ENGINEER R.C.E. 28949 DATE

REGISTERED PROFESSIONAL ENGINEER DONALD BERST No. 28949 CIVIL STATE OF CALIFORNIA

COUNTY OF RIVERSIDE
TRANSPORTATION DEPARTMENT
RECMD COUNTY OVERSIGHT ENGINEER 8/1/21
APPROVES AS TO COMPLIANCE WITH APPLICABLE COUNTY STANDARDS AND PRACTICES
REGISTRATION # 76450 DATE SIGNED

Don't Dig...Until You Call U.S.A. Toll Free
DIAL 811
for the location of buried utility lines.
Don't disrupt vital services.
TWO WORKING DAYS BEFORE YOU DIG

BENCH MARK
NAD 83 - COH 88 CCS83, ZONE 6
RCFC Z 15502
SET MAG NAIL W/ RCFC WCD TAG FLUSH
E 6,226,565.52 N 2,177,350.50
DATED: 2011 ELEV.: 1,401.46

REF	DESCRIPTION	APPR	DATE
	REVISIONS		

RIVERSIDE COUNTY FLOOD CONTROL AND WATER CONSERVATION DISTRICT
DESIGNED BY: K&A ENGINEERING
DRAWN BY: ADA
DATE DRAWN: JUNE 2021
PB NUMBER: 226078
RECOMMENDED FOR APPROVAL BY: DATE 7-27-2021
APPROVED BY: DATE 8/4/2021

FOR BIDDING PURPOSES ONLY

LAKELAND VILLAGE
LINE H
TRAFFIC HANDLING PLAN
TITLE SHEET & INDEX MAP

PROJECT NO. 3-0-00020
DRAWING NO. 3-0207
SHEET NO. TH2 OF TH25

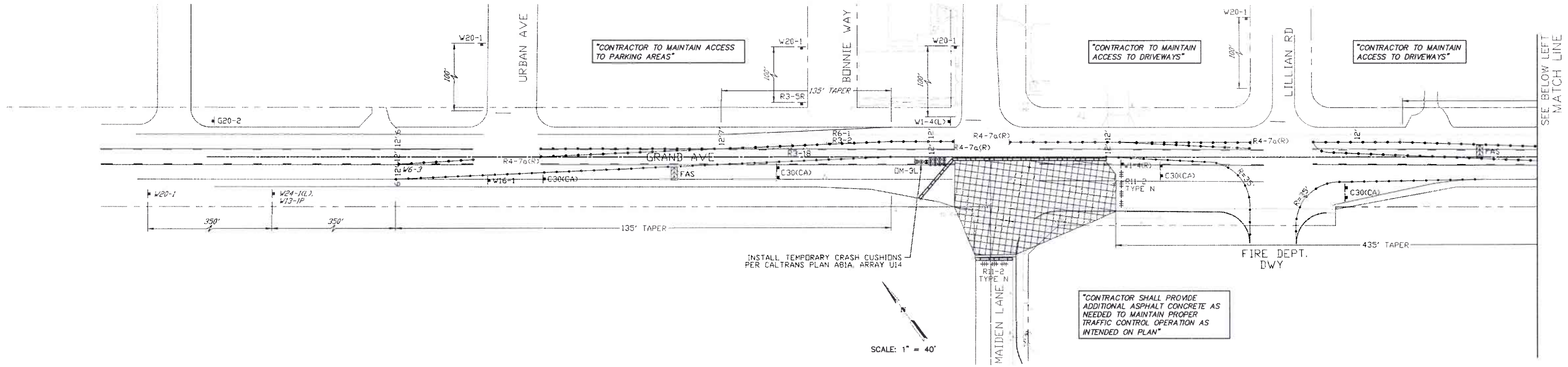

GRAND AVE LANE CLOSURE
SIGNING AND TAPER OVERVIEW

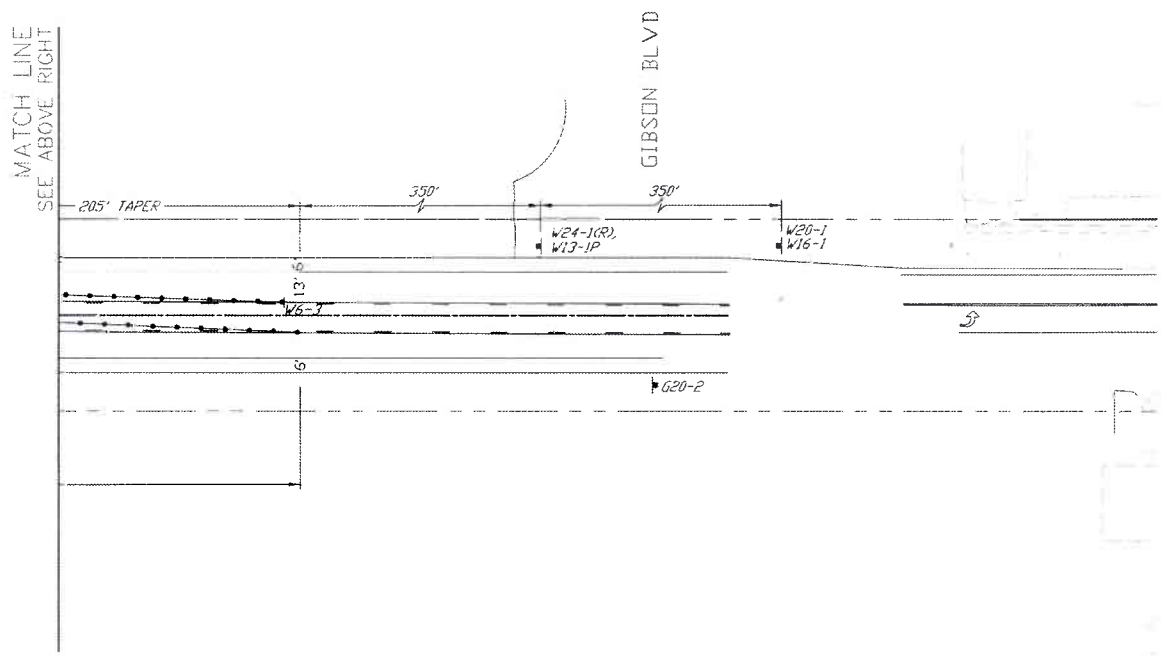

LEGEND

- ALIGNMENT OF CONE DELINEATOR WITH WHITE REFLECTIVE TAPE UNLESS SHOWN OTHERWISE.
- ALIGNMENT OF CONE DELINEATOR WITH YELLOW REFLECTIVE TAPE UNLESS SHOWN OTHERWISE.
- FLASHING ARROW SIGN (FAS)
- FLAGGER
- CONSTRUCTION SIGNS
- TYPE 3 BARRICADE
- K-RAIL (CONCRETE BARRICADE)

GENERAL T.C. NOTES:

1. THESE ARE THE MINIMUM TRAFFIC CONTROL REQUIREMENTS. ADDITIONAL TRAFFIC CONTROL MAY BE REQUIRED TO FACILITATE PUBLIC SAFETY AND TRAFFIC FLOW IF DEEMED NECESSARY BY THE ENGINEER OR RIVERSIDE COUNTY TRANSPORTATION DEPARTMENT.
2. ALL TRAFFIC CONTROL DEVICES SHALL CONFORM TO THE FHWA'S MANUAL ON UNIFORM TRAFFIC CONTROL DEVICES (MUTCD) 2014 AND THE MUTCD 2014 (REV 3) CALIFORNIA SUPPLEMENT, LATEST ADDITION AND WITH ALL OTHER APPLICABLE FEDERAL, STATE AND LOCAL LAWS.
3. SPECIAL CONSTRUCTION SIGNS SHALL BE MANUFACTURED USING MINIMUM 3" UPPER CASE BLACK LETTERS AND A BLACK BORDER ON AN ORANGE REFLECTIVE BACKGROUND.
4. FLASHING YELLOW BEACONS, TYPE B, SHALL ILLUMINATE ALL W20 SIGNS AND TYPE III BARRICADES USED AT THE WORK AREA DURING HOURS OF DARKNESS.
5. ALL TRENCHES SHALL BE BACK FILLED OR PLATED AT THE END OF EACH WORK DAY. PLATES SHALL BE PLACED FLUSH WITH EXISTING ASPHALT OR SO AS TO CREATE A SMOOTH DRIVING SURFACE TO THE SATISFACTION OF THE RESIDENT ENGINEER.
6. PRIVATE PROPERTY AND EMERGENCY ACCESS SHALL BE MAINTAINED AT ALL TIMES EXCEPT AS PERMITTED BY RESIDENT ENGINEER
7. MINIMUM LANE WIDTH TO BE 12 FEET OR AS DIRECTED BY THE RESIDENT ENGINEER.
8. ADDITIONAL "STOP" SIGNS MAY BE NEEDED IF EQUIPMENT/WORKERS ARE BLOCKING THEM FROM VIEW.
9. CONTRACTOR SHALL POST TEMPORARY "NO-PARKING" SIGNS ALONG THE SIDE OF THE STREET TO BE AFFECTED BY THIS TRAFFIC CONTROL PLAN AT LEAST 48 HOURS PRIOR TO COMMENCEMENT OF CONSTRUCTION ACTIVITIES.
10. CONTRACTOR SHALL MAINTAIN ACCESS TO RESIDENTIAL DRIVEWAYS WITHIN CONSTRUCTION WORK AREA AT ALL TIMES

TRAFFIC CONTROL SIGN LEGEND

C30(CA)	LANE CLOSED AHEAD	W1-4(L)	XX
G20-2	END ROAD WORK	W6-3	TWO-WAY TRAFFIC
OM-3L	OBJECT MARKER	W13-1P	REDUCED SPEED AHEAD
R3-2	NO LEFT TURN	W16-1	SHARE THE ROAD
R3-5R	RIGHT TURN ONLY	W20-1	ROAD WORK AHEAD
R3-18	NO LEFT/U-TURN		
R4-7A	KEEP RIGHT		
R6-1(R)	ONE WAY		
R11-2	ROAD CLOSED		

100% DRAWING SET DATED 12-Aug-2021, 12:00

PREPARED BY:
LINSCOTT, LAW & GREENSPAN, ENGINEERS
TRANSPORTATION PLANNING - TRAFFIC ENGINEERING - PARKING
600 South Lake Avenue, Suite 500 Pasadena, Ca 91106 (626) 796-2322
2 Executive Circle, Suite 250 Irvine, CA 92614 (949) 825-6175
4542 Ruffner Street, Suite 100, San Diego, Ca 92111 (858) 300-8800
PREPARED BY:
DATE 8/12/21

REGISTERED PROFESSIONAL ENGINEER KIM HOEUN PREAP No. 2833 Exp. 3/31/22 TRAFFIC STATE OF CALIFORNIA

KA ENGINEERING, LAND PLANNING, SURVEYING
357 N. SHERIDAN STREET
SUITE 117
CORONA, CALIFORNIA 92880
TEL. (951) 279-1800
FAX (951) 279-4380
Engineering, Inc.
REGISTERED PROFESSIONAL ENGINEER Donald Bergh No. 23949 CIVIL STATE OF CALIFORNIA
Donald Bergh 8/12/2021
ENGINEER R.C.E. 23949 DATE

COUNTY OF RIVERSIDE
TRANSPORTATION DEPARTMENT
RECMD COUNTY OVERSIGHT ENGINEER 8/11/21
APPROVES AS TO COMPLIANCE WITH APPLICABLE COUNTY STANDARDS AND PRACTICES.
REGISTRATION # DATE SIGNED

Don't Dig...Until You Call U.S.A. Toll Free
DIAL 811
for the location of buried utility lines.
Don't disrupt vital services.
TWO WORKING DAYS BEFORE YOU DIG

BENCH MARK
NAD 83 - CCS 88 (00.00), ZONE 6
ROFC Z 15502
SET MAG NAIL W/ ROFC WLD TAG FLUSH
E 6,226,865.52 N 2,172,350.59
DATED: 2011 ELEV: 1,401.48

REV.	DESCRIPTION	APPR.	DATE

REVISIONS

RIVERSIDE COUNTY FLOOD CONTROL AND WATER CONSERVATION DISTRICT
DESIGNED BY: KA ENGINEERING
DRAWN BY: ECR
DATE DRAWN: AUGUST 2021
JOB NUMBER: 226078
RECOMMENDED FOR APPROVAL BY: DATE 7-27-2021
APPROVED BY: DATE 8/4/2021

LAKELAND VILLAGE
LINE H
TRAFFIC HANDLING PLAN
GRAND AVENUE LANE CLOSURE PLAN

PROJECT NO. 3-0-00020
DRAWING NO. 3-0207
SHEET NO. TH3 of TH25

FOR BIDDING PURPOSES ONLY

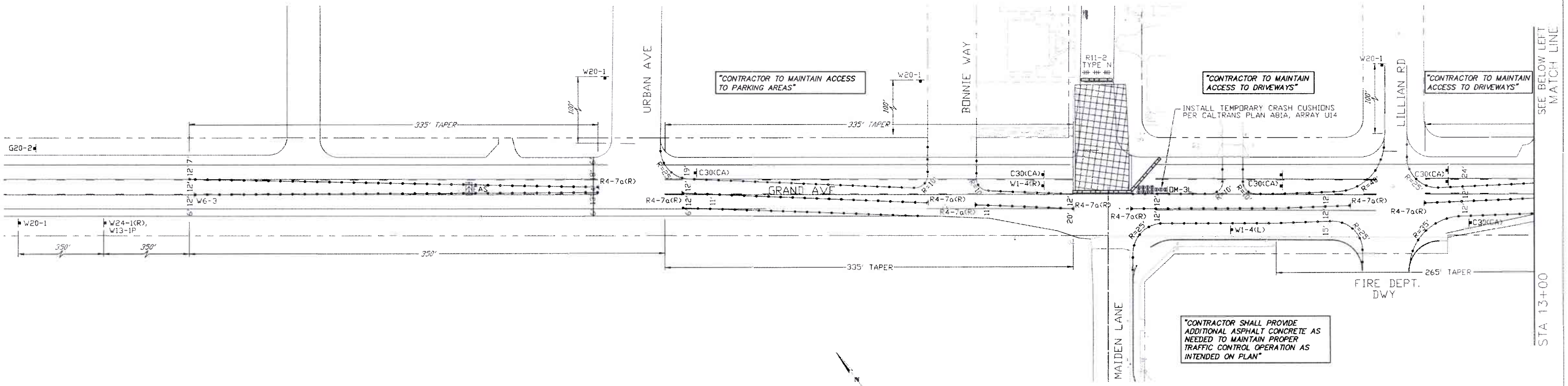

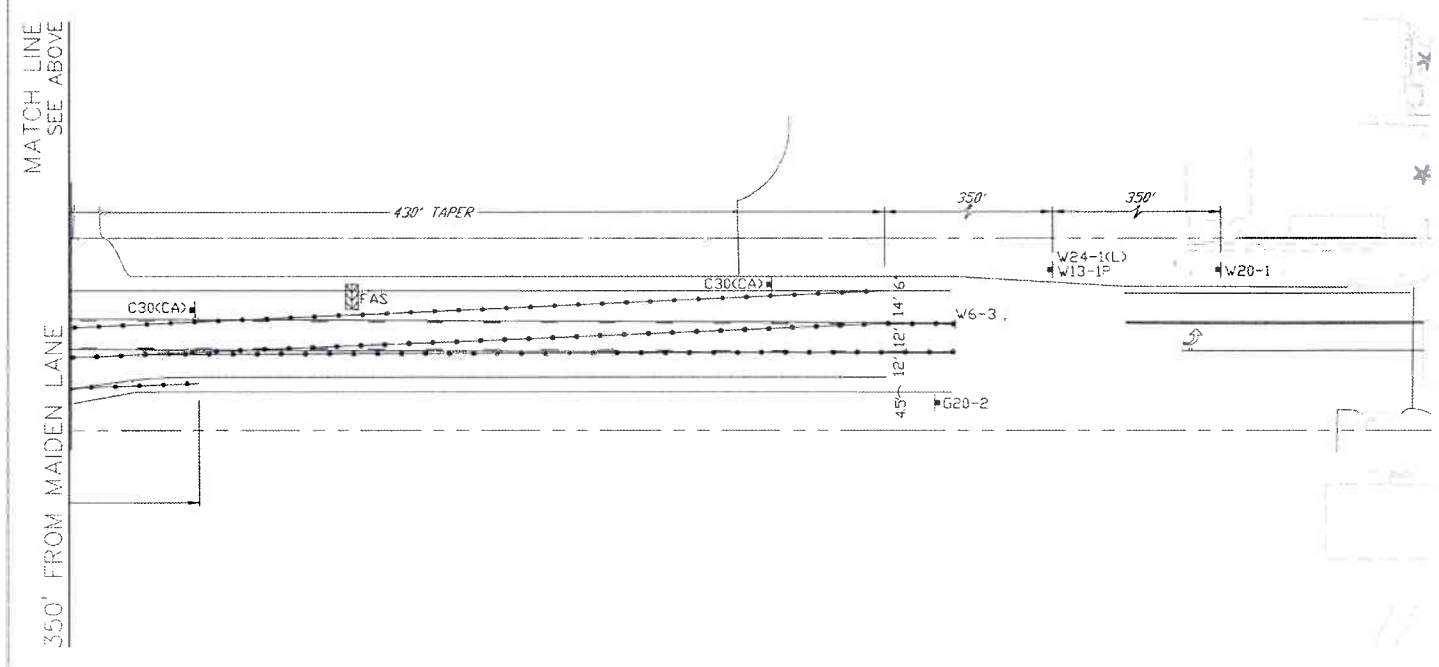

GRAND AVE LANE CLOSURE
SIGNING AND TAPER OVERVIEW

GENERAL T.C. NOTES:

1. THESE ARE THE MINIMUM TRAFFIC CONTROL REQUIREMENTS. ADDITIONAL TRAFFIC CONTROL MAY BE REQUIRED TO FACILITATE PUBLIC SAFETY AND TRAFFIC FLOW IF DEEMED NECESSARY BY THE ENGINEER OR RIVERSIDE COUNTY TRANSPORTATION DEPARTMENT.
2. ALL TRAFFIC CONTROL DEVICES SHALL CONFORM TO THE FHWA'S MANUAL ON UNIFORM TRAFFIC CONTROL DEVICES (MUTCD) 2014 AND THE MUTCD 2014 (REV 3) CALIFORNIA SUPPLEMENT, LATEST ADDITION AND WITH ALL OTHER APPLICABLE FEDERAL, STATE AND LOCAL LAWS.
3. SPECIAL CONSTRUCTION SIGNS SHALL BE MANUFACTURED USING MINIMUM 3" UPPER CASE BLACK LETTERS AND A BLACK BORDER ON AN ORANGE REFLECTIVE BACKGROUND.
4. FLASHING YELLOW BEACONS, TYPE B, SHALL ILLUMINATE ALL W20 SIGNS AND TYPE III BARRICADES USED AT THE WORK AREA DURING HOURS OF DARKNESS.
5. ALL TRENCHES SHALL BE BACK FILLED OR PLATED AT THE END OF EACH WORK DAY. PLATES SHALL BE PLACED FLUSH WITH EXISTING ASPHALT OR SO AS TO CREATE A SMOOTH DRIVING SURFACE TO THE SATISFACTION OF THE RESIDENT ENGINEER.
6. PRIVATE PROPERTY AND EMERGENCY ACCESS SHALL BE MAINTAINED AT ALL TIMES EXCEPT AS PERMITTED BY RESIDENT ENGINEER
7. MINIMUM LANE WIDTH TO BE 12 FEET OR AS DIRECTED BY THE RESIDENT ENGINEER.
8. ADDITIONAL "STOP" SIGNS MAY BE NEEDED IF EQUIPMENT/WORKERS ARE BLOCKING THEM FROM VIEW.
9. CONTRACTOR SHALL POST TEMPORARY "NO-PARKING" SIGNS ALONG THE SIDE OF THE STREET TO BE AFFECTED BY THIS TRAFFIC CONTROL PLAN AT LEAST 48 HOURS PRIOR TO COMMENCEMENT OF CONSTRUCTION ACTIVITIES.
10. CONTRACTOR SHALL MAINTAIN ACCESS TO RESIDENTIAL DRIVEWAYS WITHIN CONSTRUCTION WORK AREA AT ALL TIMES

LEGEND

- ALIGNMENT OF CONE DELINEATOR WITH WHITE REFLECTIVE TAPE UNLESS SHOWN OTHERWISE.
- ALIGNMENT OF CONE DELINEATOR WITH YELLOW REFLECTIVE TAPE UNLESS SHOWN OTHERWISE.
- FLASHING ARROW SIGN (FAS)
- FLAGGER
- CONSTRUCTION SIGNS
- TYPE 3 BARRICADE
- K-RAIL (CONCRETE BARRICADE)

TRAFFIC CONTROL SIGN LEGEND

C30(CA)	LANE CLOSED AHEAD
G20-2	END ROAD WORK
OM-3L	OBJECT MARKER
R4-7A	KEEP RIGHT
W1-4(L)	XX
W13-1P	REDUCED SPEED AHEAD
W20-1	ROAD WORK AHEAD
W24-1(R)	XXX

100% DRAWING SET DATED 12-Aug-2021, 12:00

PREPARED BY:
LINSCOTT, LAW & GREENSPAN, ENGINEERS
TRANSPORTATION PLANNING - TRAFFIC ENGINEERING - PARKING
800 South Lake Avenue, Suite 500 Pasadena, Ca 91106 (626) 796-2322
2 Executive Circle, Suite 250 Irvine, CA 92614 (949) 825-6175
4542 Ruffner Street, Suite 100, San Diego, Ca 92111 (858) 300-8800
PREPARED BY:
DATE 8/12/21

REGISTERED PROFESSIONAL ENGINEER K.M. HOEUN PEAP No. 72833 Exp. 3/31/22 TRAFFIC STATE OF CALIFORNIA

KA ENGINEERING LAND PLANNING SURVEYING
Engineering, Inc.
357 N. SHERIDAN STREET
SUITE 117
CORONA, CALIFORNIA 92880
TEL (951) 279-1800
FAX (951) 279-4380
ENGINEER REG. 28949 DATE: 8/12/2021

COUNTY OF RIVERSIDE
TRANSPORTATION DEPARTMENT
RECMD COUNTY OVERSIGHT ENGINEER 8/11/21
APPROVES AS TO COMPLIANCE WITH APPLICABLE COUNTY STANDARDS AND PRACTICES
REGISTRATION # DATE SIGNED

Don't Dig...Until You Call U.S.A. Toll Free
DIAL 811
for the location of buried utility lines.
Don't disrupt vital services.
TWO WORKING DAYS BEFORE YOU DIG

BENCH MARK
NAD 83 - CDH 88 00583, ZONE 6
PROFC Z 15502
SET MAG NAIL W/ PROFC WCB TAG FLUSH
E 6,226,965.51 N 2,177,350.50
DATED: 2011 ELEV: 1,401.46

REV.	DESCRIPTION	APPR.	DATE
	REVISIONS		

RIVERSIDE COUNTY FLOOD CONTROL AND WATER CONSERVATION DISTRICT
DESIGNED BY K&A ENGINEERING
DRAWN BY: FCR
DATE DRAWN: AUGUST 2021
PR NUMBER 226078
RECOMMENDED FOR APPROVAL BY: DATE 7-27-2021
APPROVED BY: DATE 8/4/2021

FOR BIDDING PURPOSES ONLY

LAKELAND VILLAGE
LINE H
TRAFFIC HANDLING PLAN
GRAND AVENUE LANE CLOSURE PLAN

PROJECT NO. 3-0-00020
DRAWING NO. 3-0207
SHEET NO. TH4 OF TH25

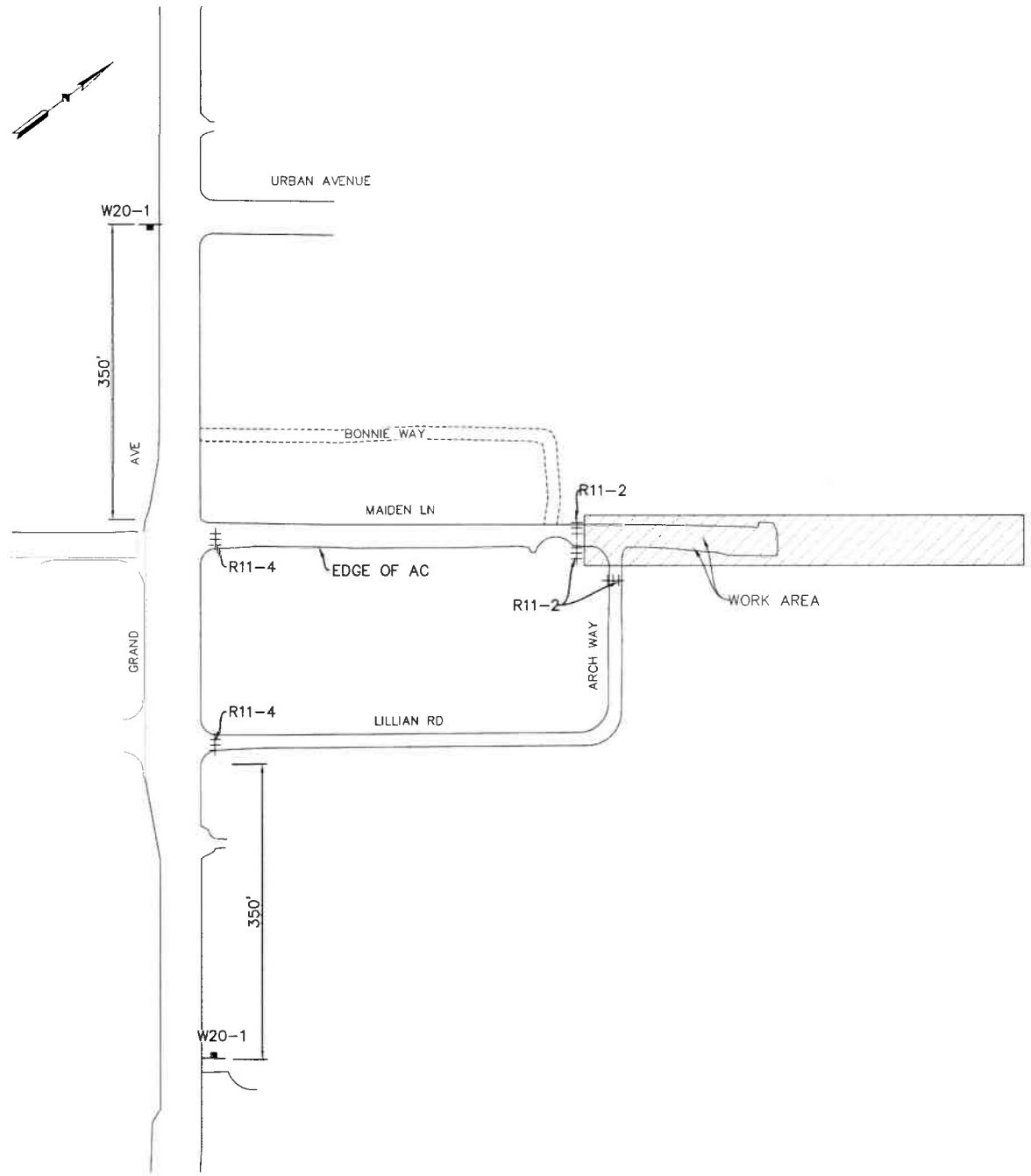

MAIDEN LANE ROAD CLOSURE
DETOUR FOR STORM DRAIN
IMPROVEMENTS

REFER TO SHEET TC15

LEGEND

- CONE
- FLAGGER
- CONSTRUCTION SIGNS
- TYPE 3 BARRICADE
- K-RAIL (CONCRETE BARRICADE)
- CONSTRUCTION AREA

TRAFFIC CONTROL SIGN LEGEND

R11-2	ROAD CLOSED
R11-4	ROAD CLOSED TO THROUGH TRAFFIC
W20-1	ROAD WORK AHEAD

RIVERSIDE COUNTY FLOOD CONTROL AND WATER CONSERVATION DISTRICT (RCFC & WCD) GENERAL TRAFFIC CONTROL NOTES:

1. THESE ARE THE MINIMUM TRAFFIC CONTROL REQUIREMENTS. ADDITIONAL TRAFFIC CONTROL MAY BE REQUIRED TO FACILITATE PUBLIC SAFETY AND TRAFFIC FLOW IF DEEMED NECESSARY BY THE ENGINEER OR RIVERSIDE COUNTY TRANSPORTATION DEPARTMENT.
2. ALL TRAFFIC CONTROL DEVICES SHALL CONFORM TO THE FHWA'S MANUAL ON UNIFORM TRAFFIC CONTROL DEVICES (MUTCD) 2014 AND THE MUTCD 2014 (REV 3) CALIFORNIA SUPPLEMENT, LATEST ADDITION AND WITH ALL OTHER APPLICABLE FEDERAL, STATE AND LOCAL LAWS.
3. SPECIAL CONSTRUCTION SIGNS SHALL BE MANUFACTURED USING MINIMUM 3" UPPER CASE BLACK LETTERS AND A BLACK BORDER ON AN ORANGE REFLECTIVE BACKGROUND.
4. FLASHING YELLOW BEACONS, TYPE B, SHALL ILLUMINATE ALL W20 SIGNS AND TYPE III BARRICADES USED AT THE WORK AREA DURING HOURS OF DARKNESS.
5. ALL TRENCHES SHALL BE BACK FILLED OR PLATED AT THE END OF EACH WORK DAY. PLATES SHALL BE PLACED FLUSH WITH EXISTING ASPHALT OR SO AS TO CREATE A SMOOTH DRIVING SURFACE TO THE SATISFACTION OF THE RESIDENT ENGINEER.
6. PRIVATE PROPERTY AND EMERGENCY ACCESS SHALL BE MAINTAINED AT ALL TIMES EXCEPT AS PERMITTED BY RESIDENT ENGINEER
7. MINIMUM LANE WIDTH TO BE 12 FEET OR AS DIRECTED BY THE RESIDENT ENGINEER.
8. ADDITIONAL "STOP" SIGNS MAY BE NEEDED IF EQUIPMENT/WORKERS ARE BLOCKING THEM FROM VIEW.
9. CONTRACTOR SHALL POST TEMPORARY "NO-PARKING" SIGNS ALONG THE SIDE OF THE STREET TO BE AFFECTED BY THIS TRAFFIC CONTROL PLAN AT LEAST 48 HOURS PRIOR TO COMMENCEMENT OF CONSTRUCTION ACTIVITIES.
10. CONTRACTOR SHALL MAINTAIN ACCESS TO RESIDENTIAL DRIVEWAYS WITHIN CONSTRUCTION WORK AREA AT ALL TIMES

CONSTRUCTION DRAWING SET DATED 22 JUNE, 2021

LINSCOTT, LAW & GREENSPAN, ENGINEERS
TRANSPORTATION PLANNING • TRAFFIC ENGINEERING • PARKING
600 South Lake Avenue, Suite 500 Pasadena, Ca 91106 (626) 796-2322
2 Executive Circle, Suite 250 Irvine, CA 92614 (949) 825-6175
4542 Ruffner Street, Suite 100, San Diego, Ca 92111 (858) 300-8800

K&A Engineering, Inc
ENGINEERING
LAND PLANNING
SURVEYING
357 N. SHERIDAN STREET
SUITE 117
CORONA, CALIFORNIA 92880
TEL (951) 279-1800
FAX (951) 279-4380

REGISTERED PROFESSIONAL ENGINEER DONALD W. BERGH No. 28949 CIVIL STATE OF CALIFORNIA

ENGINEER R.C.E 28949 DATE: 4/20/2020

COUNTY OF RIVERSIDE
TRANSPORTATION DEPARTMENT
RECMD COUNTY OVERSIGHT ENGINEER 8/4/21
APPROVES AS TO COMPLIANCE WITH APPLICABLE COUNTY STANDARDS AND PRACTICES.
REGISTRATION # 76450 DATE SIGNED

Don't Dig...Until You Call U.S.A. Toll Free
DIAL 811
for the location of buried utility lines.
Don't disrupt vital services.
BURIED CABLE
TWO WORKING DAYS BEFORE YOU DIG

BENCH MARK
NAD 83 - COH 88 CCS83, ZONE 6
RCFC Z 15502
SET MAG NAIL W/ RCFC WCD TAG FLUSH
E 6,226,565.52 N 2,177,350.50
DATED: 2011 ELEV.: 1,401.46

REF.	DESCRIPTION	APPR.	DATE
	REVISIONS		

RIVERSIDE COUNTY FLOOD CONTROL AND WATER CONSERVATION DISTRICT
DESIGNED BY: K&A ENGINEERING
DRAWN BY: ADA
DATE DRAWN: JUNE 2021
P.B. NUMBER: 226078
RECOMMENDED FOR APPROVAL BY: DATE 7-27-2021
APPROVED BY: DATE 8/4/2021

LAKELAND VILLAGE
LINE H
TRAFFIC HANDLING PLAN

TRAFFIC DETOUR PLAN

FOR BIDDING PURPOSES ONLY

PROJECT NO. 3-0-00020
DRAWING NO. 3-0207
SHEET NO. TH5 OF TH25

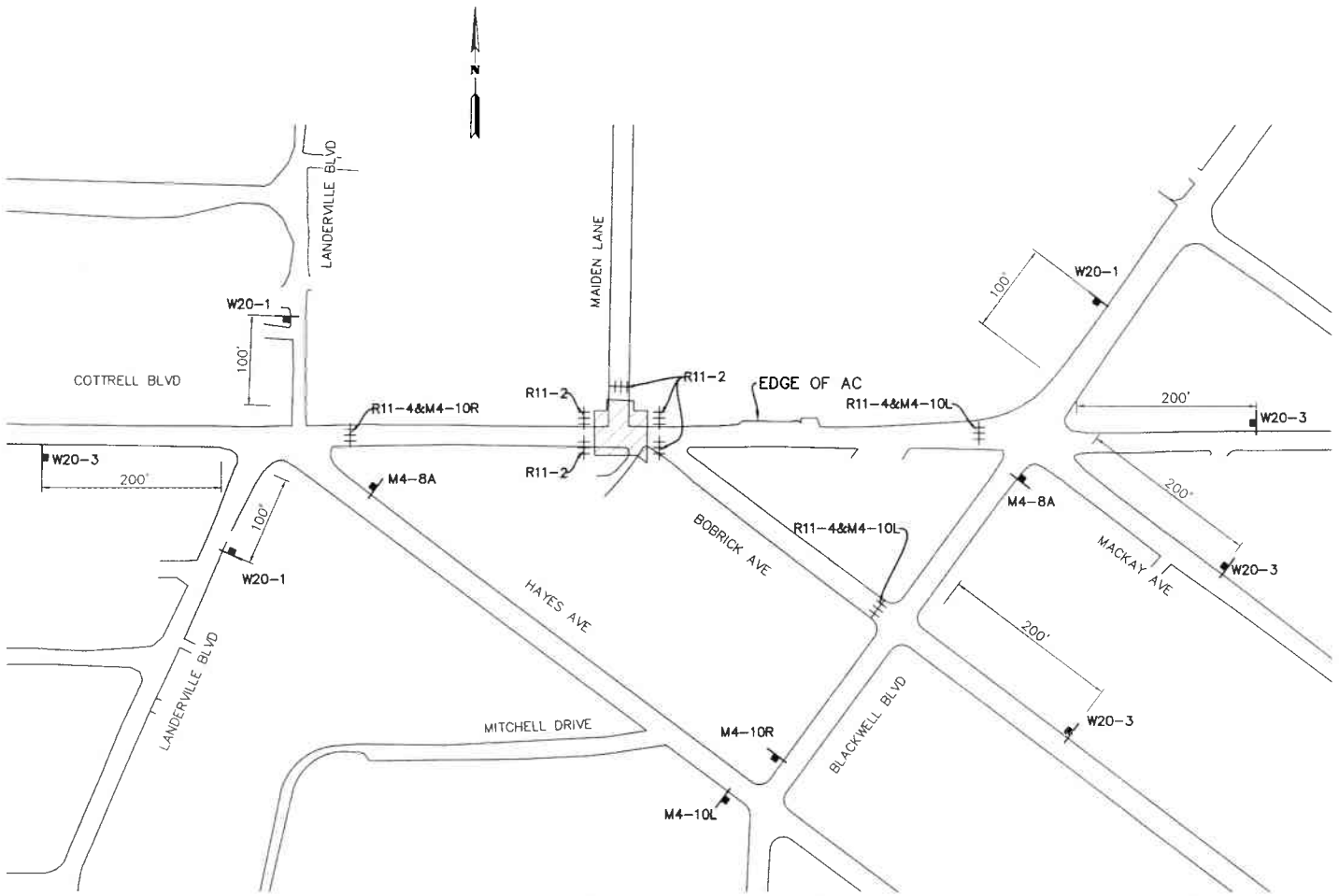

COTTRELL BLVD ROAD CLOSURE
DETOUR FOR STORM DRAIN
IMPROVEMENTS AT INTERSECTION
OF COTTRELL BLVD, BOBRICK AVE,
AND MAIDEN LANE

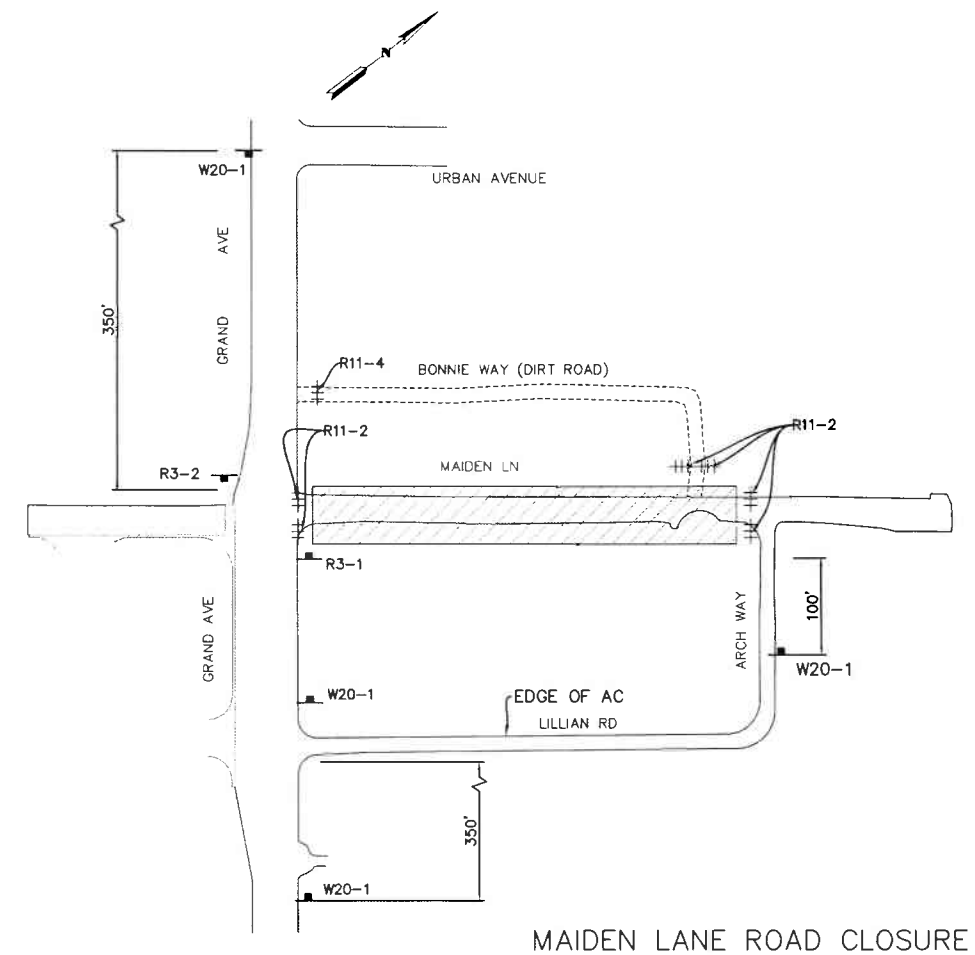

MAIDEN LANE ROAD CLOSURE
DETOUR FOR STORM DRAIN
IMPROVEMENTS BETWEEN LILLIAN
ROAD AND GRAND AVE

REFER TO SHEET TC15 FOR
STREET CLOSURE PLAN

RIVERSIDE COUNTY FLOOD CONTROL AND WATER CONSERVATION DISTRICT (RCFC & WCD) GENERAL TRAFFIC CONTROL NOTES:

1. THESE ARE THE MINIMUM TRAFFIC CONTROL REQUIREMENTS. ADDITIONAL TRAFFIC CONTROL MAY BE REQUIRED TO FACILITATE PUBLIC SAFETY AND TRAFFIC FLOW IF DEEMED NECESSARY BY THE ENGINEER OR RIVERSIDE COUNTY TRANSPORTATION DEPARTMENT.
2. ALL TRAFFIC CONTROL DEVICES SHALL CONFORM TO THE FHWA'S MANUAL ON UNIFORM TRAFFIC CONTROL DEVICES (MUTCD) 2014 AND THE MUTCD 2014 (REV 3) CALIFORNIA SUPPLEMENT, LATEST ADDITION AND WITH ALL OTHER APPLICABLE FEDERAL, STATE AND LOCAL LAWS.
3. SPECIAL CONSTRUCTION SIGNS SHALL BE MANUFACTURED USING MINIMUM 3" UPPER CASE BLACK LETTERS AND A BLACK BORDER ON AN ORANGE REFLECTIVE BACKGROUND.
4. FLASHING YELLOW BEACONS, TYPE B, SHALL ILLUMINATE ALL W20 SIGNS AND TYPE III BARRICADES USED AT THE WORK AREA DURING HOURS OF DARKNESS.
5. ALL TRENCHES SHALL BE BACK FILLED OR PLATED AT THE END OF EACH WORK DAY. PLATES SHALL BE PLACED FLUSH WITH EXISTING ASPHALT OR SO AS TO CREATE A SMOOTH DRIVING SURFACE TO THE SATISFACTION OF THE RESIDENT ENGINEER.
6. PRIVATE PROPERTY AND EMERGENCY ACCESS SHALL BE MAINTAINED AT ALL TIMES EXCEPT AS PERMITTED BY RESIDENT ENGINEER
7. MINIMUM LANE WIDTH TO BE 12 FEET OR AS DIRECTED BY THE RESIDENT ENGINEER.
8. ADDITIONAL "STOP" SIGNS MAY BE NEEDED IF EQUIPMENT/WORKERS ARE BLOCKING THEM FROM VIEW.
9. CONTRACTOR SHALL POST TEMPORARY "NO-PARKING" SIGNS ALONG THE SIDE OF THE STREET TO BE AFFECTED BY THIS TRAFFIC CONTROL PLAN AT LEAST 48 HOURS PRIOR TO COMMENCEMENT OF CONSTRUCTION ACTIVITIES.
10. CONTRACTOR SHALL MAINTAIN ACCESS TO RESIDENTIAL DRIVEWAYS WITHIN CONSTRUCTION WORK AREA AT ALL TIMES

LEGEND

- CONE
- FLAGGER
- CONSTRUCTION SIGNS
- TYPE 3 BARRICADE
- K-RAIL (CONCRETE BARRICADE)
- CONSTRUCTION AREA

TRAFFIC CONTROL SIGN LEGEND

M4-8A	END DETOUR
M4-10L, M4-10R	DETOUR WITH ARROW
R3-1	NO RIGHT TURN
R3-2	NO LEFT TURN
R11-2	ROAD CLOSED
R11-4	ROAD CLOSED TO THROUGH TRAFFIC
W20-1	ROAD WORK AHEAD
W20-3	ROAD CLOSED AHEAD

CONSTRUCTION DRAWING SET DATED 22 JUNE, 2021

LINSCOTT, LAW & GREENSPAN, ENGINEERS
TRANSPORTATION PLANNING · TRAFFIC ENGINEERING · PARKING
600 South Lake Avenue, Suite 500 Pasadena, Ca 91106 (626) 796-2322
3 Executive Circle, Suite 250 Irvine, CA 92614 (949) 825-6175
4542 Ruffner Street, Suite 104, San Diego, Ca 92111 (858) 560-0000

K&A Engineering, Inc.
ENGINEERING / LAND PLANNING / SURVEYING
357 N. SHERIDAN STREET
SUITE 117
CORONA, CALIFORNIA 92880
TEL. (951) 279-1800
FAX (951) 279-4380

ENGINEER R.C.E. 28949 DATE: 4/20/2020

REGISTERED PROFESSIONAL ENGINEER DONALD W. BERCH No. 28949 CIVIL STATE OF CALIFORNIA

COUNTY OF RIVERSIDE
TRANSPORTATION DEPARTMENT
RECMD COUNTY OVERSIGHT ENGINEER 8/11/21
APPROVES AS TO COMPLIANCE WITH APPLICABLE COUNTY STANDARDS AND PRACTICES.
REGISTRATION # 76450 DATE SIGNED

Don't Dig...Until You Call U.S.A. Toll Free
DIAL 811
for the location of buried utility lines.
Don't disrupt vital services.
TWO WORKING DAYS BEFORE YOU DIG

BENCH MARK
NAD 83 - COH 88 CCS83, ZONE 6
RCFC Z 15502
SET MAG NAIL W/ RCFC WCD TAG FLUSH
E 6,226,565.52 N 2,177,350.50
DATED: 2011 ELEV.: 1,401.46

REF	REVISIONS	APPR	DATE

RIVERSIDE COUNTY FLOOD CONTROL AND WATER CONSERVATION DISTRICT

DESIGNED BY: K&A ENGINEERING
DRAWN BY: ADA
DATE DRAWN: JUNE 2021
PB NUMBER: 226078

RECOMMENDED FOR APPROVAL BY: DATE: 7-27-2021
APPROVED BY: DATE: 8/4/2021

FOR BIDDING PURPOSES ONLY

LAKELAND VILLAGE
LINE H
TRAFFIC HANDLING PLAN

TRAFFIC DETOUR PLAN

PROJECT NO. 3-0-00020
DRAWING NO. 3-0207
SHEET NO. TH6 OF TH25

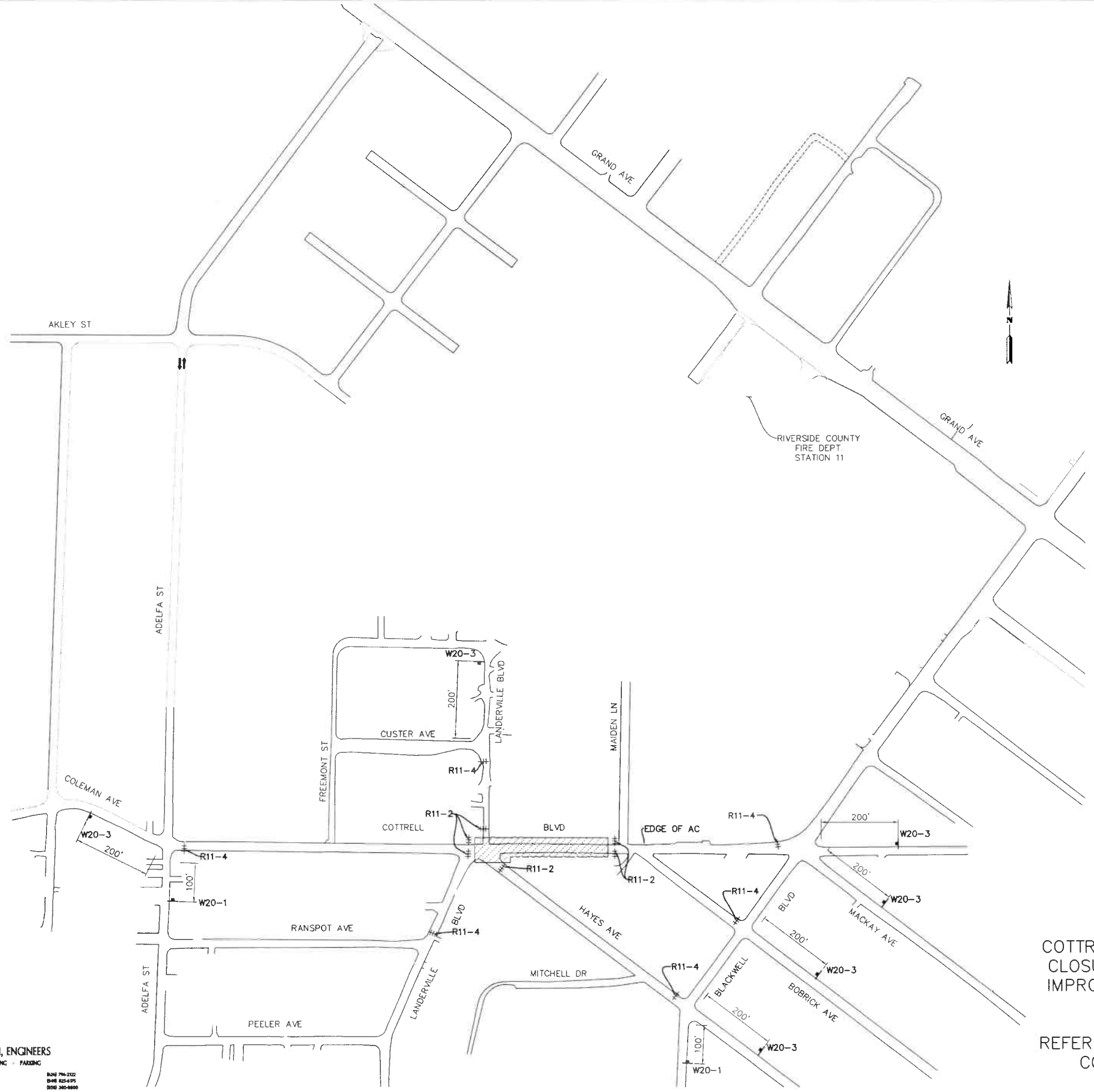

LEGEND

- CONE
- FLAGGER
- CONSTRUCTION SIGNS
- TYPE 3 BARRICADE
- K-RAIL (CONCRETE BARRICADE)
- CONSTRUCTION AREA

TRAFFIC CONTROL SIGN LEGEND

R11-2	ROAD CLOSED
R11-4	ROAD CLOSED TO THROUGH TRAFFIC
W20-1	ROAD WORK AHEAD
W20-3	ROAD CLOSED AHEAD

RIVERSIDE COUNTY FLOOD CONTROL AND WATER CONSERVATION DISTRICT (RCFC & WCD) GENERAL TRAFFIC CONTROL NOTES:

1. THESE ARE THE MINIMUM TRAFFIC CONTROL REQUIREMENTS. ADDITIONAL TRAFFIC CONTROL MAY BE REQUIRED TO FACILITATE PUBLIC SAFETY AND TRAFFIC FLOW IF DEEMED NECESSARY BY THE ENGINEER OR RIVERSIDE COUNTY TRANSPORTATION DEPARTMENT.
2. ALL TRAFFIC CONTROL DEVICES SHALL CONFORM TO THE FHWA'S MANUAL ON UNIFORM TRAFFIC CONTROL DEVICES (MUTCD) 2014 AND THE MUTCD 2014 (REV 3) CALIFORNIA SUPPLEMENT, LATEST ADDITION AND WITH ALL OTHER APPLICABLE FEDERAL, STATE AND LOCAL LAWS.
3. SPECIAL CONSTRUCTION SIGNS SHALL BE MANUFACTURED USING MINIMUM 3" UPPER CASE BLACK LETTERS AND A BLACK BORDER ON AN ORANGE REFLECTIVE BACKGROUND.
4. FLASHING YELLOW BEACONS, TYPE B, SHALL ILLUMINATE ALL W20 SIGNS AND TYPE III BARRICADES USED AT THE WORK AREA DURING HOURS OF DARKNESS.
5. ALL TRENCHES SHALL BE BACK FILLED OR PLATED AT THE END OF EACH WORK DAY. PLATES SHALL BE PLACED FLUSH WITH EXISTING ASPHALT OR SO AS TO CREATE A SMOOTH DRIVING SURFACE TO THE SATISFACTION OF THE RESIDENT ENGINEER.
6. PRIVATE PROPERTY AND EMERGENCY ACCESS SHALL BE MAINTAINED AT ALL TIMES EXCEPT AS PERMITTED BY RESIDENT ENGINEER
7. MINIMUM LANE WIDTH TO BE 12 FEET OR AS DIRECTED BY THE RESIDENT ENGINEER.
8. ADDITIONAL "STOP" SIGNS MAY BE NEEDED IF EQUIPMENT/WORKERS ARE BLOCKING THEM FROM VIEW.
9. CONTRACTOR SHALL POST TEMPORARY "NO-PARKING" SIGNS ALONG THE SIDE OF THE STREET TO BE AFFECTED BY THIS TRAFFIC CONTROL PLAN AT LEAST 48 HOURS PRIOR TO COMMENCEMENT OF CONSTRUCTION ACTIVITIES.
10. CONTRACTOR SHALL MAINTAIN ACCESS TO RESIDENTIAL DRIVEWAYS WITHIN CONSTRUCTION WORK AREA AT ALL TIMES

COTTRELL BLVD AND HAYES AVE ROAD CLOSURES DETOUR FOR STORM DRAIN IMPROVEMENTS BETWEEN LANDERVILLE BLVD AND MAIDEN LANE

REFER TO SHEET TC18 FOR STRUCTURE CONSTRUCTION ROAD CLOSURE

CONSTRUCTION DRAWING SET DATED 22 JUNE, 2021

LINSCOTT, LAW & GREENSPAN, ENGINEERS
TRANSPORTATION PLANNING • TRAFFIC ENGINEERING • PARKING
☐ 600 South Lake Avenue, Suite 200 Pasadena, Ca 91106 (626) 796-2322
☐ 2 Executive Circle, Suite 250 Irvine, CA 92614 (949) 825-6175
☐ 4542 Ruffner Street, Suite 100, San Diego, Ca 92111 (858) 300-8800

FOR BIDDING PURPOSES ONLY

KA ENGINEERING, LAND PLANNING, SURVEYING
Engineering, Inc
357 N. SHERIDAN STREET
SUITE 117
CORONA, CALIFORNIA 92880
TEL (951) 279-1800
FAX (951) 279-4380

REGISTERED PROFESSIONAL ENGINEER DONALD W. BERGH No. 28949 CIVIL STATE OF CALIFORNIA

Donald Bergh 4/20/2020
ENGINEER R.C.E. 28949 DATE:

COUNTY OF RIVERSIDE
TRANSPORTATION DEPARTMENT
REC'MD: COUNTY OVERSIGHT ENGINEER 8/4/21
APPROVES AS TO COMPLIANCE WITH APPLICABLE COUNTY STANDARDS AND PRACTICES.
REGISTRATION # 76450 DATE SIGNED

Don't Dig...Until You Call U.S.A. Toll Free
DIAL 811
for the location of buried utility lines.
Don't disrupt vital services.
TWO WORKING DAYS BEFORE YOU DIG

BENCH MARK
NAD 83 - COH 88 CCS83, ZONE 6
RCFC Z 15502
SET MAG NAIL W/ RCFC WCD TAG FLUSH
E 6,226,565.52 N 2,177,350.50
DATED: 2011 ELEV.: 1,401.46

REF.	REVISIONS	APPR	DATE

RIVERSIDE COUNTY FLOOD CONTROL AND WATER CONSERVATION DISTRICT
DESIGNED BY: K&A ENGINEERING
DRAWN BY: ADA
DATE DRAWN: JUNE 2021
P8 NUMBER: 226078
RECOMMENDED FOR APPROVAL BY: DATE 7-27-2021
APPROVED BY: DATE 8/4/2021

LAKELAND VILLAGE
LINE H
TRAFFIC HANDLING PLAN

TRAFFIC DETOUR PLAN

PROJECT NO. 3-0-00020
DRAWING NO. 3-0207
SHEET NO. TH7 OF TH25

LEGEND

- CONE
- FLAGGER
- CONSTRUCTION SIGNS
- TYPE 3 BARRICADE
- K-RAIL (CONCRETE BARRICADE)
- CONSTRUCTION AREA

TRAFFIC CONTROL SIGN LEGEND

C9A(CA)	FLAG MAN PICTURE
M4-8A	END DETOUR
M4-10	DETOUR WITH ARROW
R11-2	ROAD CLOSED
R11-4	ROAD CLOSED TO THROUGH TRAFFIC
SC3(CA)	DETOUR WITH ARROW (FORWARD)
W20-1	ROAD WORK AHEAD
W20-3	ROAD CLOSED AHEAD

RIVERSIDE COUNTY FLOOD CONTROL AND WATER CONSERVATION DISTRICT (RCFC & WCD) GENERAL TRAFFIC CONTROL NOTES:

1. THESE ARE THE MINIMUM TRAFFIC CONTROL REQUIREMENTS. ADDITIONAL TRAFFIC CONTROL MAY BE REQUIRED TO FACILITATE PUBLIC SAFETY AND TRAFFIC FLOW IF DEEMED NECESSARY BY THE ENGINEER OR RIVERSIDE COUNTY TRANSPORTATION DEPARTMENT.
2. ALL TRAFFIC CONTROL DEVICES SHALL CONFORM TO THE FHWA'S MANUAL ON UNIFORM TRAFFIC CONTROL DEVICES (MUTCD) 2014 AND THE MUTCD 2014 (REV 3) CALIFORNIA SUPPLEMENT, LATEST ADDITION AND WITH ALL OTHER APPLICABLE FEDERAL, STATE AND LOCAL LAWS.
3. SPECIAL CONSTRUCTION SIGNS SHALL BE MANUFACTURED USING MINIMUM 3" UPPER CASE BLACK LETTERS AND A BLACK BORDER ON AN ORANGE REFLECTIVE BACKGROUND.
4. FLASHING YELLOW BEACONS, TYPE B, SHALL ILLUMINATE ALL W20 SIGNS AND TYPE III BARRICADES USED AT THE WORK AREA DURING HOURS OF DARKNESS.
5. ALL TRENCHES SHALL BE BACK FILLED OR PLATED AT THE END OF EACH WORK DAY. PLATES SHALL BE PLACED FLUSH WITH EXISTING ASPHALT OR SO AS TO CREATE A SMOOTH DRIVING SURFACE TO THE SATISFACTION OF THE RESIDENT ENGINEER.
6. PRIVATE PROPERTY AND EMERGENCY ACCESS SHALL BE MAINTAINED AT ALL TIMES EXCEPT AS PERMITTED BY RESIDENT ENGINEER
7. MINIMUM LANE WIDTH TO BE 12 FEET OR AS DIRECTED BY THE RESIDENT ENGINEER.
8. ADDITIONAL "STOP" SIGNS MAY BE NEEDED IF EQUIPMENT/WORKERS ARE BLOCKING THEM FROM VIEW.
9. CONTRACTOR SHALL POST TEMPORARY "NO-PARKING" SIGNS ALONG THE SIDE OF THE STREET TO BE AFFECTED BY THIS TRAFFIC CONTROL PLAN AT LEAST 48 HOURS PRIOR TO COMMENCEMENT OF CONSTRUCTION ACTIVITIES.
10. CONTRACTOR SHALL MAINTAIN ACCESS TO RESIDENTIAL DRIVEWAYS WITHIN CONSTRUCTION WORK AREA AT ALL TIMES

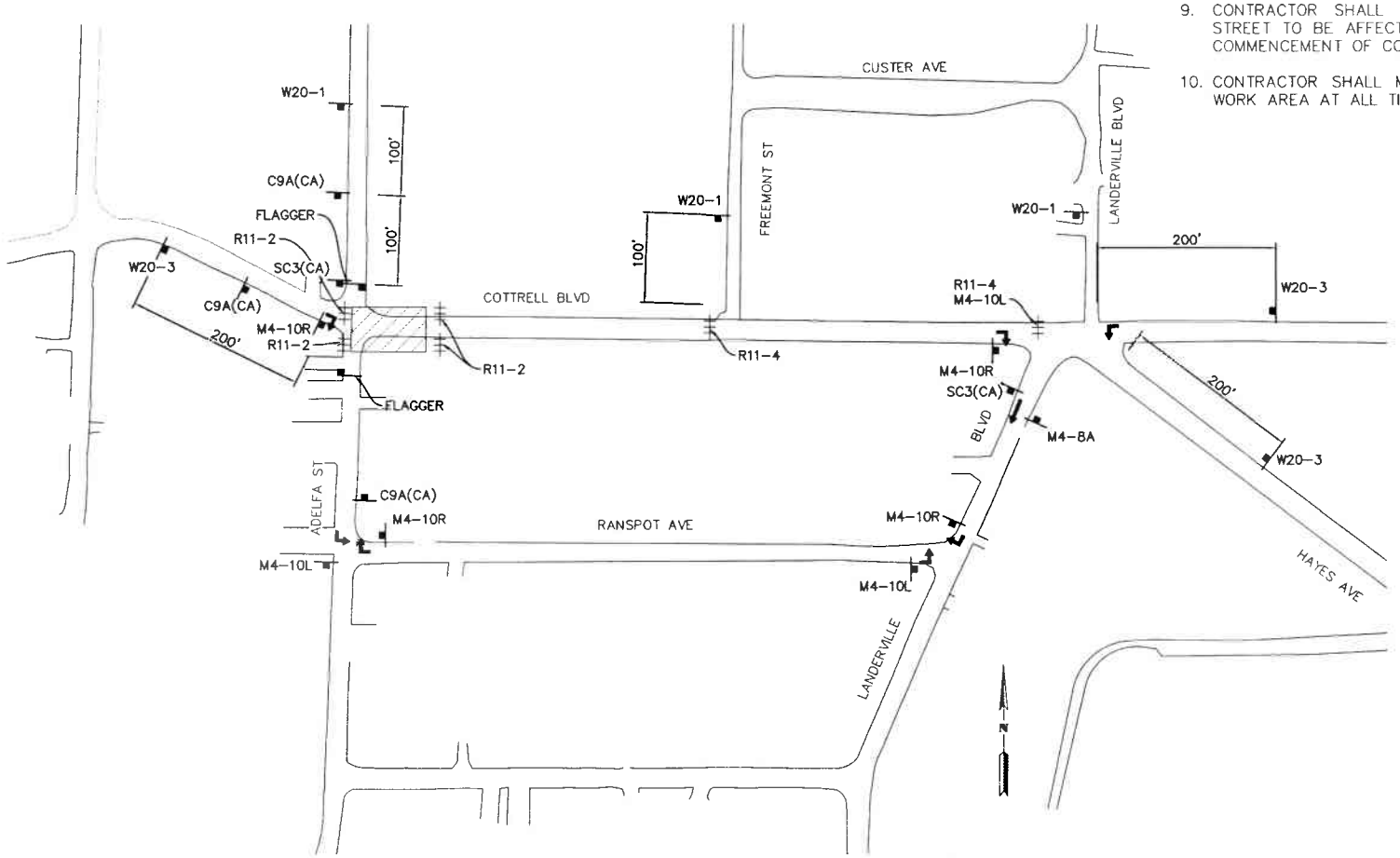

COTTRELL BLVD ROAD CLOSURE DETOUR FOR STORM DRAIN IMPROVEMENTS BETWEEN ADELFA ST AND FREEMONT ST

REFER TO SHEET TC19 FOR STRUCTURE CONSTRUCTION ROAD CLOSURE

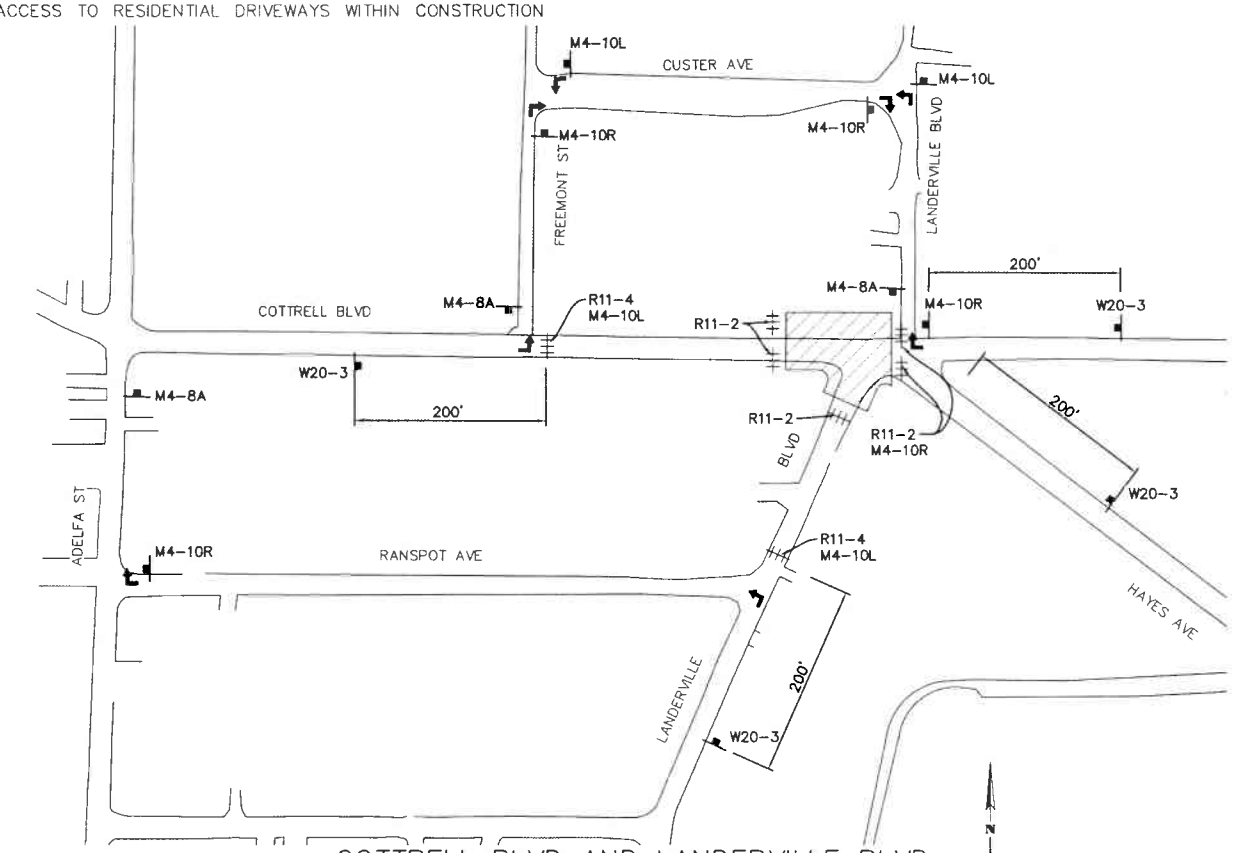

COTTRELL BLVD AND LANDERVILLE BLVD ROAD CLOSURE DETOUR FOR STORM DRAIN IMPROVEMENTS BETWEEN FREEMONT ST AND HAYES AVE

REFER TO SHEET TC18 FOR STRUCTURE CONSTRUCTION ROAD CLOSURE

CONSTRUCTION DRAWING SET DATED 22 JUNE, 2021

FOR BIDDING PURPOSES ONLY

LINSCOTT, LAW & GREENSPAN, ENGINEERS
TRANSPORTATION PLANNING · TRAFFIC ENGINEERING · PARKING
608 South Lake Avenue, Suite 500 Pasadena, Ca 91106 (626) 796-2322
2 Executive Circle, Suite 250 Irvine, CA 92614 (949) 825-6175
4542 Ruffner Street, Suite 100, San Diego, Ca 92111 (858) 300-8800

K&A Engineering, Inc
ENGINEERING / LAND PLANNING / SURVEYING
357 N. SHERIDAN STREET
SUITE 117
CORONA, CALIFORNIA 92880
TEL. (951) 279-1800
FAX (951) 279-4380

REGISTERED PROFESSIONAL ENGINEER DONALD W. BERGH No. 28949 CIVIL STATE OF CALIFORNIA

ENGINEER R.C.E 28949 DATE: 4/20/2020

COUNTY OF RIVERSIDE TRANSPORTATION DEPARTMENT
RECMD COUNTY OVERSIGHT ENGINEER 8/11/21
APPROVES AS TO COMPLIANCE WITH APPLICABLE COUNTY STANDARDS AND PRACTICES.
REGISTRATION # 76450 DATE SIGNED

Don't Dig...Until You Call U.S.A. Toll Free
DIAL 811
for the location of buried utility lines.
Don't disrupt vital services.
TWO WORKING DAYS BEFORE YOU DIG

BENCH MARK
NAD 83 - COH 88 CCS83, ZONE 6
RCFC Z 15502
SET MAG NAIL W/ RCFC WCD TAG FLUSH
E 6,226,565.52 N 2,177,350.50
DATED: 2011 ELEV.: 1,401.46

REF	DESCRIPTION	APPR.	DATE
	REVISIONS		

RIVERSIDE COUNTY FLOOD CONTROL AND WATER CONSERVATION DISTRICT

DESIGNED BY: K&A ENGINEERING
DRAWN BY: ADA
DATE DRAWN: JUNE 2021
PB NUMBER: 226078

RECOMMENDED FOR APPROVAL BY: DATE 7-27-2021
APPROVED BY: DATE 8/4/2021

LAKELAND VILLAGE
LINE H
TRAFFIC HANDLING PLAN

TRAFFIC DETOUR PLAN

PROJECT NO. 3-0-00020
DRAWING NO. 3-0207
SHEET NO. TH8 OF TH25

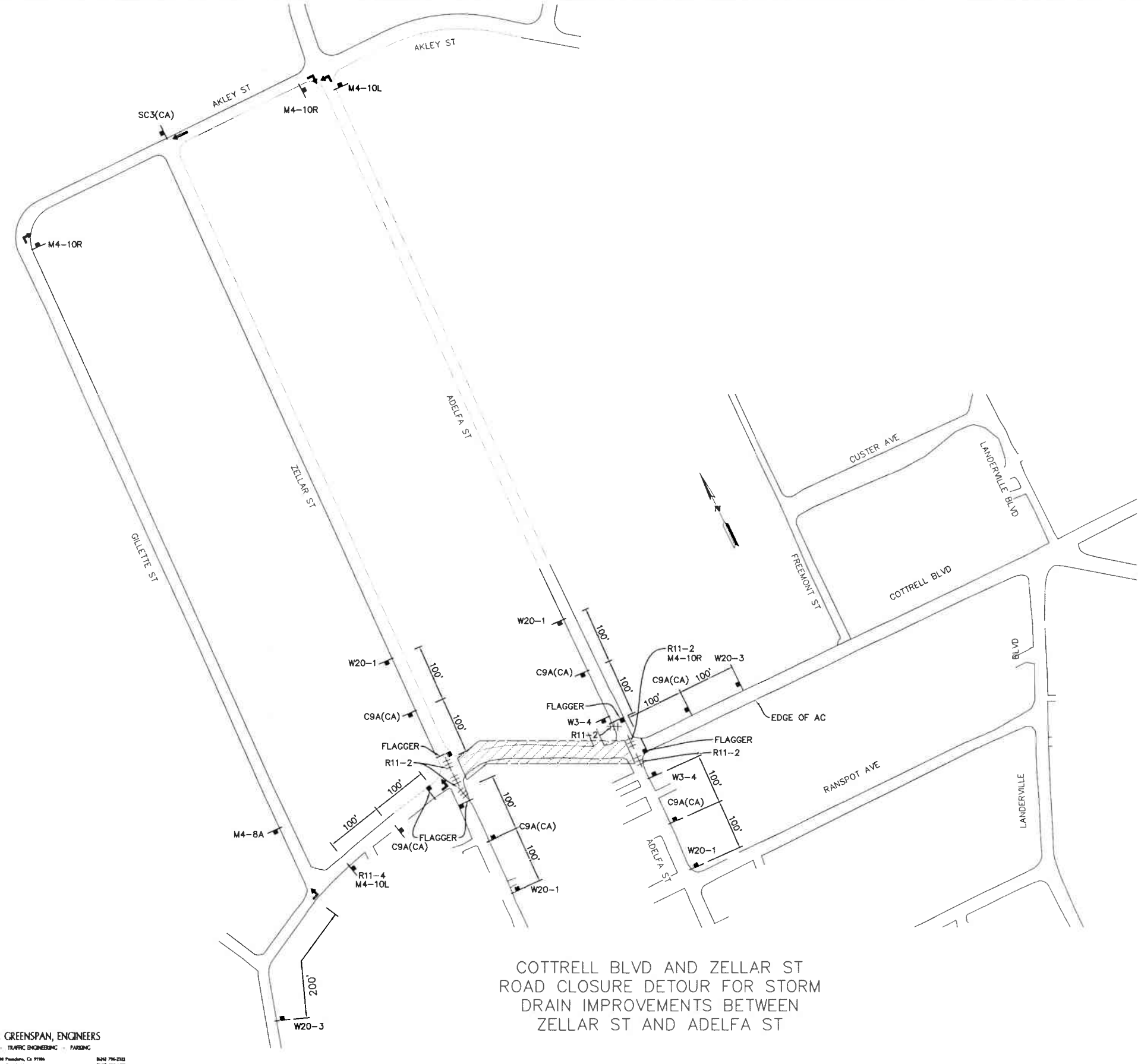

COTTRELL BLVD AND ZELLAR ST
ROAD CLOSURE DETOUR FOR STORM
DRAIN IMPROVEMENTS BETWEEN
ZELLAR ST AND ADELFA ST

LEGEND

- CONE
- FLAGGER
- CONSTRUCTION SIGNS
- TYPE 3 BARRICADE
- K-RAIL (CONCRETE BARRICADE)
- CONSTRUCTION AREA

TRAFFIC CONTROL SIGN LEGEND

C9A(CA)	FLAG MAN PICTURE
M4-8A	END DETOUR
M4-10	DETOUR WITH ARROW
R11-2	ROAD CLOSED
R11-4	ROAD CLOSED TO THROUGH TRAFFIC
SC3(CA)	DETOUR WITH ARROW (FORWARD)
W3-4	BE PREPARED TO STOP
W20-1	ROAD WORK AHEAD
W20-3	ROAD CLOSED AHEAD

RIVERSIDE COUNTY FLOOD CONTROL AND WATER CONSERVATION DISTRICT (RCFC & WCD) GENERAL TRAFFIC CONTROL NOTES:

1. THESE ARE THE MINIMUM TRAFFIC CONTROL REQUIREMENTS. ADDITIONAL TRAFFIC CONTROL MAY BE REQUIRED TO FACILITATE PUBLIC SAFETY AND TRAFFIC FLOW IF DEEMED NECESSARY BY THE ENGINEER OR RIVERSIDE COUNTY TRANSPORTATION DEPARTMENT.
2. ALL TRAFFIC CONTROL DEVICES SHALL CONFORM TO THE FHWA'S MANUAL ON UNIFORM TRAFFIC CONTROL DEVICES (MUTCD) 2014 AND THE MUTCD 2014 (REV 3) CALIFORNIA SUPPLEMENT, LATEST ADDITION AND WITH ALL OTHER APPLICABLE FEDERAL, STATE AND LOCAL LAWS.
3. SPECIAL CONSTRUCTION SIGNS SHALL BE MANUFACTURED USING MINIMUM 3" UPPER CASE BLACK LETTERS AND A BLACK BORDER ON AN ORANGE REFLECTIVE BACKGROUND.
4. FLASHING YELLOW BEACONS, TYPE B, SHALL ILLUMINATE ALL W20 SIGNS AND TYPE III BARRICADES USED AT THE WORK AREA DURING HOURS OF DARKNESS.
5. ALL TRENCHES SHALL BE BACK FILLED OR PLATED AT THE END OF EACH WORK DAY. PLATES SHALL BE PLACED FLUSH WITH EXISTING ASPHALT OR SO AS TO CREATE A SMOOTH DRIVING SURFACE TO THE SATISFACTION OF THE RESIDENT ENGINEER.
6. PRIVATE PROPERTY AND EMERGENCY ACCESS SHALL BE MAINTAINED AT ALL TIMES EXCEPT AS PERMITTED BY RESIDENT ENGINEER
7. MINIMUM LANE WIDTH TO BE 12 FEET OR AS DIRECTED BY THE RESIDENT ENGINEER.
8. ADDITIONAL "STOP" SIGNS MAY BE NEEDED IF EQUIPMENT/WORKERS ARE BLOCKING THEM FROM VIEW.
9. CONTRACTOR SHALL POST TEMPORARY "NO-PARKING" SIGNS ALONG THE SIDE OF THE STREET TO BE AFFECTED BY THIS TRAFFIC CONTROL PLAN AT LEAST 48 HOURS PRIOR TO COMMENCEMENT OF CONSTRUCTION ACTIVITIES.
10. CONTRACTOR SHALL MAINTAIN ACCESS TO RESIDENTIAL DRIVEWAYS WITHIN CONSTRUCTION WORK AREA AT ALL TIMES

CONSTRUCTION DRAWING SET DATED 22 JUNE, 2021

FOR BIDDING PURPOSES ONLY

LINSCOTT, LAW & GREENSPAN, ENGINEERS
TRANSPORTATION PLANNING · TRAFFIC ENGINEERING · PARKING
☐ 600 South Lake Avenue, Suite 500 Pasadena, Ca 91106 (626) 796-2322
☐ 2 Executive Circle, Suite 250 Irvine, CA 92614 (949) 825-6175
☐ 4542 Harbor Street, Suite 104, San Diego, Ca 92171 (858) 560-8880

K&A Engineering, Inc.
ENGINEERING
LAND PLANNING
SURVEYING
357 N. SHERIDAN STREET
SUITE 117
CORONA, CALIFORNIA 92880
TEL. (951) 279-1800
FAX (951) 279-4380

REGISTERED PROFESSIONAL ENGINEER DONALD W. BERGH No. 28949 CIVIL STATE OF CALIFORNIA

ENGINEER R.C.E. 28949 DATE 4/20/2020

COUNTY OF RIVERSIDE
TRANSPORTATION DEPARTMENT
RECMD COUNTY OVERSIGHT ENGINEER 8/11/21
APPROVES AS TO COMPLIANCE WITH APPLICABLE COUNTY STANDARDS AND PRACTICES.
REGISTRATION # 76450 DATE SIGNED

Don't Dig...Until You Call U.S.A. Toll Free
DIAL 811
for the location of buried utility lines.
Don't disrupt vital services.
TWO WORKING DAYS BEFORE YOU DIG

BENCH MARK
NAD 83 – COH 88 CCS83, ZONE 6
RCFC Z 15502
SET MAG NAIL W/ RCFC WCD TAG FLUSH
E 6,226,565.52 N 2,177,350.50
DATED: 2011 ELEV.: 1,401.46

REF.	DESCRIPTION	APPR.	DATE
	REVISIONS		

RIVERSIDE COUNTY FLOOD CONTROL AND WATER CONSERVATION DISTRICT
DESIGNED BY: K&A ENGINEERING
DRAWN BY: ADA
DATE DRAWN: JUNE 2021
P8 NUMBER: 226078
RECOMMENDED FOR APPROVAL BY: DATE 7-27-2021
APPROVED BY: DATE 8/4/2021

LAKELAND VILLAGE
LINE H
TRAFFIC HANDLING PLAN
TRAFFIC DETOUR PLAN

PROJECT NO. 3-0-00020
DRAWING NO. 3-0207
SHEET NO. TH9 OF TH25

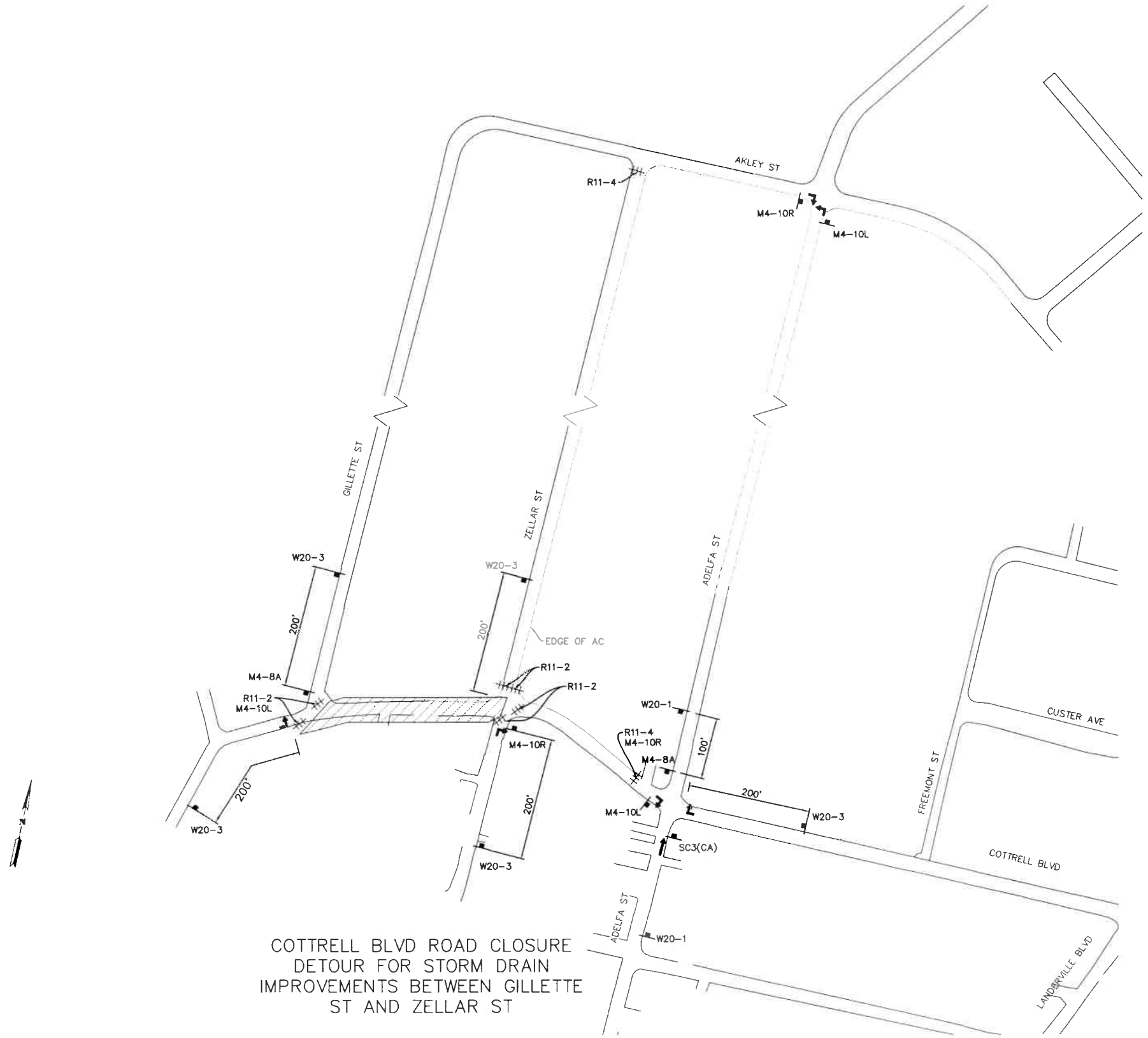

COTTRELL BLVD ROAD CLOSURE
DETOUR FOR STORM DRAIN
IMPROVEMENTS BETWEEN GILLETTE
ST AND ZELLAR ST

LEGEND

- CONE
- FLAGGER
- CONSTRUCTION SIGNS
- TYPE 3 BARRICADE
- K-RAIL (CONCRETE BARRICADE)
- CONSTRUCTION AREA

TRAFFIC CONTROL SIGN LEGEND

M4-8A	END DETOUR
M4-10	DETOUR WITH ARROW
R11-2	ROAD CLOSED
R11-4	ROAD CLOSED TO THROUGH TRAFFIC
SC3(CA)	DETOUR WITH ARROW (FORWARD)
W20-1	ROAD WORK AHEAD
W20-3	ROAD CLOSED AHEAD

RIVERSIDE COUNTY FLOOD CONTROL AND WATER CONSERVATION DISTRICT (RCFC & WCD) GENERAL TRAFFIC CONTROL NOTES:

1. THESE ARE THE MINIMUM TRAFFIC CONTROL REQUIREMENTS. ADDITIONAL TRAFFIC CONTROL MAY BE REQUIRED TO FACILITATE PUBLIC SAFETY AND TRAFFIC FLOW IF DEEMED NECESSARY BY THE ENGINEER OR RIVERSIDE COUNTY TRANSPORTATION DEPARTMENT.
2. ALL TRAFFIC CONTROL DEVICES SHALL CONFORM TO THE FHWA'S MANUAL ON UNIFORM TRAFFIC CONTROL DEVICES (MUTCD) 2014 AND THE MUTCD 2014 (REV 3) CALIFORNIA SUPPLEMENT, LATEST ADDITION AND WITH ALL OTHER APPLICABLE FEDERAL, STATE AND LOCAL LAWS.
3. SPECIAL CONSTRUCTION SIGNS SHALL BE MANUFACTURED USING MINIMUM 3" UPPER CASE BLACK LETTERS AND A BLACK BORDER ON AN ORANGE REFLECTIVE BACKGROUND.
4. FLASHING YELLOW BEACONS, TYPE B, SHALL ILLUMINATE ALL W20 SIGNS AND TYPE III BARRICADES USED AT THE WORK AREA DURING HOURS OF DARKNESS.
5. ALL TRENCHES SHALL BE BACK FILLED OR PLATED AT THE END OF EACH WORK DAY. PLATES SHALL BE PLACED FLUSH WITH EXISTING ASPHALT OR SO AS TO CREATE A SMOOTH DRIVING SURFACE TO THE SATISFACTION OF THE RESIDENT ENGINEER.
6. PRIVATE PROPERTY AND EMERGENCY ACCESS SHALL BE MAINTAINED AT ALL TIMES EXCEPT AS PERMITTED BY RESIDENT ENGINEER
7. MINIMUM LANE WIDTH TO BE 12 FEET OR AS DIRECTED BY THE RESIDENT ENGINEER.
8. ADDITIONAL "STOP" SIGNS MAY BE NEEDED IF EQUIPMENT/WORKERS ARE BLOCKING THEM FROM VIEW.
9. CONTRACTOR SHALL POST TEMPORARY "NO-PARKING" SIGNS ALONG THE SIDE OF THE STREET TO BE AFFECTED BY THIS TRAFFIC CONTROL PLAN AT LEAST 48 HOURS PRIOR TO COMMENCEMENT OF CONSTRUCTION ACTIVITIES.
10. CONTRACTOR SHALL MAINTAIN ACCESS TO RESIDENTIAL DRIVEWAYS WITHIN CONSTRUCTION WORK AREA AT ALL TIMES

CONSTRUCTION DRAWING SET DATED 22 JUNE, 2021

FOR BIDDING PURPOSES ONLY

LINSCOTT, LAW & GREENSPAN, ENGINEERS
TRANSPORTATION PLANNING · TRAFFIC ENGINEERING · PARKING
□ 600 South Lake Avenue, Suite 500 Pasadena, Ca 91106 (626) 796-2322
■ 3 Executive Circle, Suite 250 Irvine, CA 92614 (949) 825-1575
□ 4542 Ruffner Street, Suite 100, San Diego, Ca 92111 (858) 300-8800

K&A ENGINEERING LAND PLANNING SURVEYING
Engineering, Inc.
357 N. SHERIDAN STREET
SUITE 117
CORONA, CALIFORNIA 92880
TEL. (951) 279-1800
FAX (951) 279-4380

Donald Bergh 4/20/2020
ENGINEER R.C.E 28949 DATE:

REGISTERED PROFESSIONAL ENGINEER DONALD W. BERGH No. 28949 CIVIL STATE OF CALIFORNIA

COUNTY OF RIVERSIDE
TRANSPORTATION DEPARTMENT
RECMD COUNTY OVERSIGHT ENGINEER 8/11/21
APPROVES AS TO COMPLIANCE WITH APPLICABLE COUNTY STANDARDS AND PRACTICES.
REGISTRATION # 76450 DATE SIGNED

Don't Dig...Until You Call U.S.A. Toll Free
DIAL 811
for the location of buried utility lines.
Don't disrupt vital services.
BURIED CABLE
TWO WORKING DAYS BEFORE YOU DIG

BENCH MARK
NAD 83 – COH 88 CCS83, ZONE 6
RCFC Z 15502
SET MAG NAIL W/ RCFC WCD TAG FLUSH
E 6,226,565.52 N 2,177,350.50
DATED: 2011 ELEV.: 1,401.46

REF.	REVISIONS DESCRIPTION	APPR	DATE

RIVERSIDE COUNTY FLOOD CONTROL AND WATER CONSERVATION DISTRICT
DESIGNED BY: K&A ENGINEERING
DRAWN BY: ADA
DATE DRAWN: JUNE 2021
P# NUMBER: 226078
RECOMMENDED FOR APPROVAL BY: Edward H. Quigley DATE: 7-27-2021
APPROVED BY: Richard Lindsey DATE: 8/4/2021

LAKELAND VILLAGE
LINE H
TRAFFIC HANDLING PLAN
TRAFFIC DETOUR PLAN

PROJECT NO. 3-0-00020
DRAWING NO. 3-0207
SHEET NO. TH10 OF TH25

LEGEND

- CONE
- FLAGGER
- CONSTRUCTION SIGNS
- TYPE 3 BARRICADE
- K-RAIL (CONCRETE BARRICADE)
- CONSTRUCTION AREA

TRAFFIC CONTROL SIGN LEGEND

M4-8A	END DETOUR
M4-10	DETOUR WITH ARROW
R11-2	ROAD CLOSED
R11-4	ROAD CLOSED TO THROUGH TRAFFIC
SC3(CA)	DETOUR WITH ARROW (FORWARD)
W20-1	ROAD WORK AHEAD
W20-3	ROAD CLOSED AHEAD

RIVERSIDE COUNTY FLOOD CONTROL AND WATER CONSERVATION DISTRICT (RCFC & WCD) GENERAL TRAFFIC CONTROL NOTES:

1. THESE ARE THE MINIMUM TRAFFIC CONTROL REQUIREMENTS. ADDITIONAL TRAFFIC CONTROL MAY BE REQUIRED TO FACILITATE PUBLIC SAFETY AND TRAFFIC FLOW IF DEEMED NECESSARY BY THE ENGINEER OR RIVERSIDE COUNTY TRANSPORTATION DEPARTMENT.
2. ALL TRAFFIC CONTROL DEVICES SHALL CONFORM TO THE FHWA'S MANUAL ON UNIFORM TRAFFIC CONTROL DEVICES (MUTCD) 2014 AND THE MUTCD 2014 (REV 3) CALIFORNIA SUPPLEMENT, LATEST ADDITION AND WITH ALL OTHER APPLICABLE FEDERAL, STATE AND LOCAL LAWS.
3. SPECIAL CONSTRUCTION SIGNS SHALL BE MANUFACTURED USING MINIMUM 3" UPPER CASE BLACK LETTERS AND A BLACK BORDER ON AN ORANGE REFLECTIVE BACKGROUND.
4. FLASHING YELLOW BEACONS, TYPE B, SHALL ILLUMINATE ALL W20 SIGNS AND TYPE III BARRICADES USED AT THE WORK AREA DURING HOURS OF DARKNESS.
5. ALL TRENCHES SHALL BE BACK FILLED OR PLATED AT THE END OF EACH WORK DAY. PLATES SHALL BE PLACED FLUSH WITH EXISTING ASPHALT OR SO AS TO CREATE A SMOOTH DRIVING SURFACE TO THE SATISFACTION OF THE RESIDENT ENGINEER.
6. PRIVATE PROPERTY AND EMERGENCY ACCESS SHALL BE MAINTAINED AT ALL TIMES EXCEPT AS PERMITTED BY RESIDENT ENGINEER
7. MINIMUM LANE WIDTH TO BE 12 FEET OR AS DIRECTED BY THE RESIDENT ENGINEER.
8. ADDITIONAL "STOP" SIGNS MAY BE NEEDED IF EQUIPMENT/WORKERS ARE BLOCKING THEM FROM VIEW.
9. CONTRACTOR SHALL POST TEMPORARY "NO-PARKING" SIGNS ALONG THE SIDE OF THE STREET TO BE AFFECTED BY THIS TRAFFIC CONTROL PLAN AT LEAST 48 HOURS PRIOR TO COMMENCEMENT OF CONSTRUCTION ACTIVITIES.
10. CONTRACTOR SHALL MAINTAIN ACCESS TO RESIDENTIAL DRIVEWAYS WITHIN CONSTRUCTION WORK AREA AT ALL TIMES

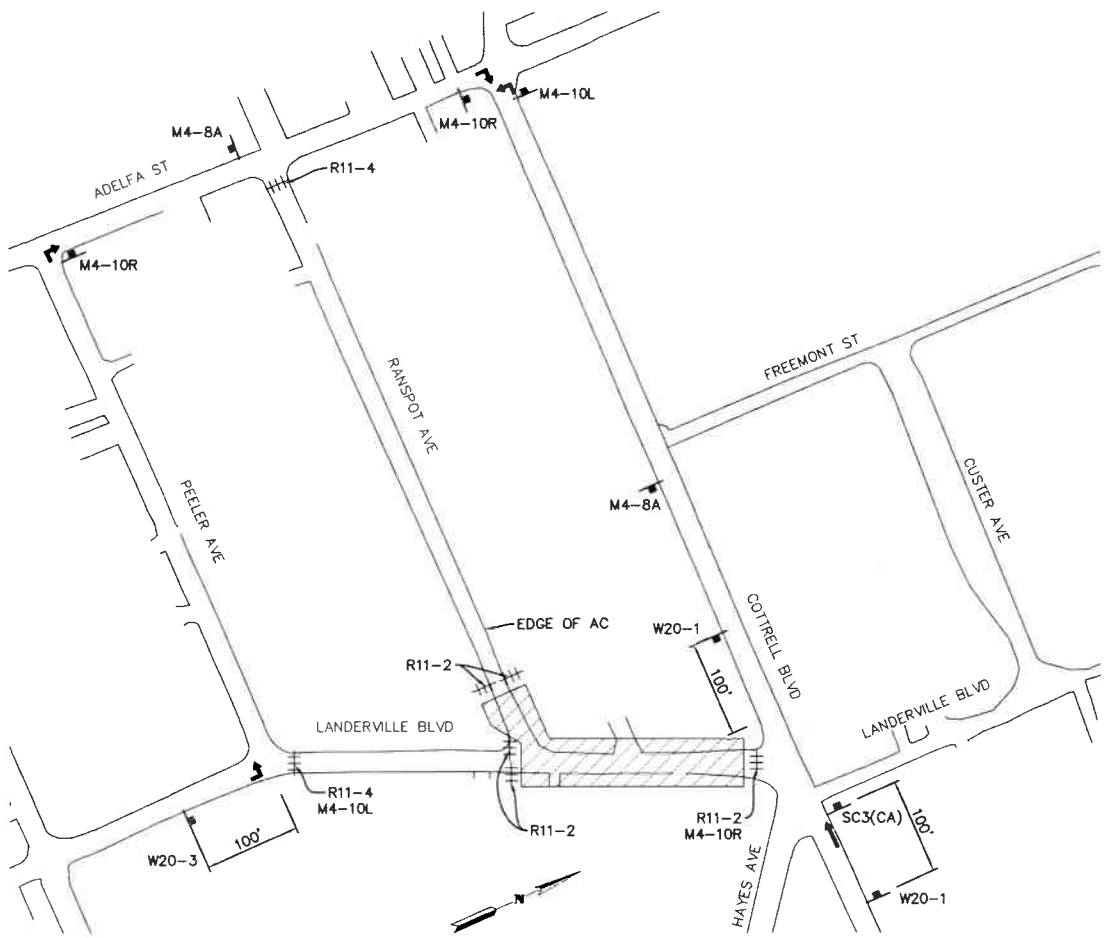

LANDERVILLE BLVD ROAD CLOSURE
DETOUR FOR STORM DRAIN
IMPROVEMENTS BETWEEN RANSPOT
AVE AND COTTRELL BLVD

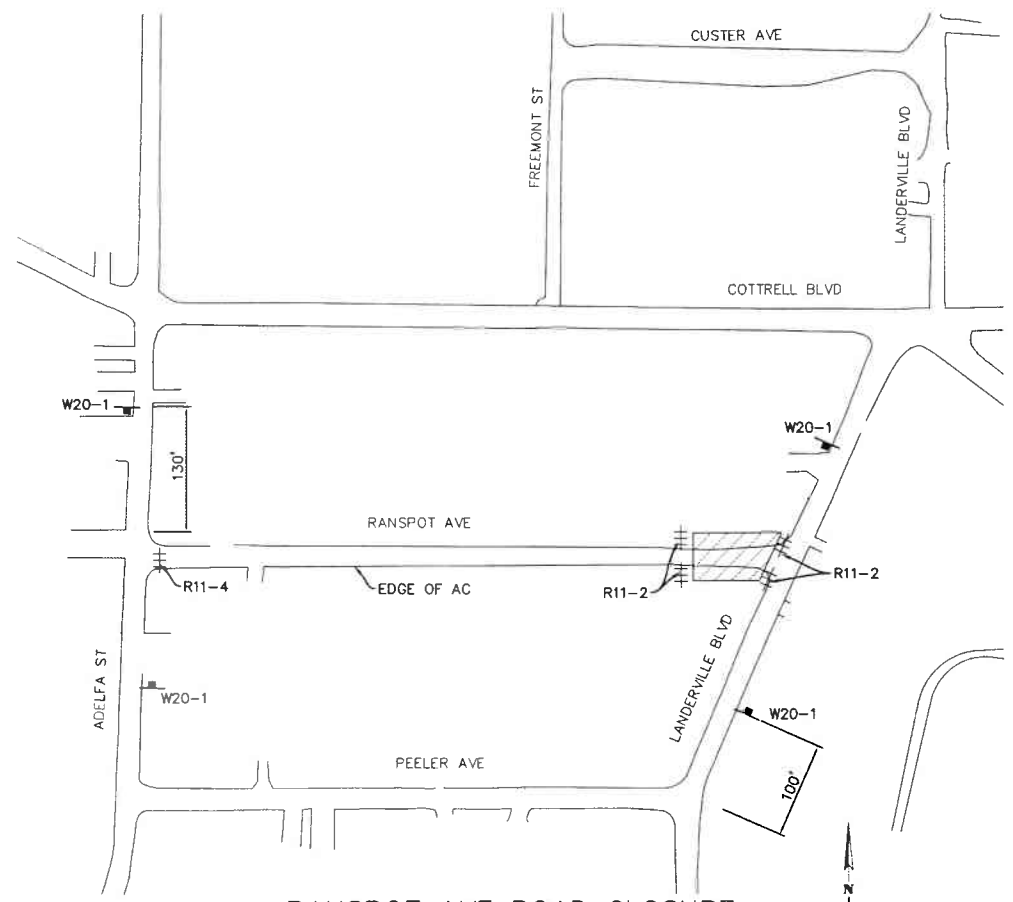

RANSPOT AVE ROAD CLOSURE
DETOUR FOR STORM DRAIN
IMPROVEMENTS BETWEEN ADELFA
ST AND LANDERVILLE BLVD

CONSTRUCTION DRAWING SET DATED 22 JUNE, 2021

LINSCOTT, LAW & GREENSPAN, ENGINEERS
TRANSPORTATION PLANNING · TRAFFIC ENGINEERING · PARKING
600 South Lake Avenue, Suite 598 Pasadena, Ca 91106 (626) 796-2322
2 Executive Circle, Suite 250 Irvine, CA 92614 (949) 826-9275
4542 Ruffner Street, Suite 106, San Diego, Ca 92111 (858) 300-8800

K&A Engineering, Inc.
ENGINEERING
LAND PLANNING
SURVEYING
357 N. SHERIDAN STREET
SUITE 117
CORONA, CALIFORNIA 92880
TEL (951) 279-1800
FAX (951) 279-4380

Donald Bergh 4/20/2020
ENGINEER R.C.E. 28949 DATE

REGISTERED PROFESSIONAL ENGINEER DONALD W. BERGH No. 28949 CIVIL STATE OF CALIFORNIA

COUNTY OF RIVERSIDE
TRANSPORTATION DEPARTMENT
REC'MD COUNTY OVERSIGHT ENGINEER 8/4/21
APPROVES AS TO COMPLIANCE WITH APPLICABLE COUNTY STANDARDS AND PRACTICES.
REGISTRATION # 76450 DATE SIGNED

Don't Dig...Until You Call U.S.A. Toll Free
DIAL 811
for the location of buried utility lines.
Don't disrupt vital services.
TWO WORKING DAYS BEFORE YOU DIG

BENCH MARK
NAD 83 – COH 88 CCS83, ZONE 6
RCFC Z 15502
SET MAG NAIL W/ RCFC WCD TAG FLUSH
E 6,226,565.52 N 2,177,350.50
DATED: 2011 ELEV.: 1,401.46

REVISIONS			
REF.	DESCRIPTION	APPR.	DATE

RIVERSIDE COUNTY FLOOD CONTROL AND WATER CONSERVATION DISTRICT
DESIGNED BY: K&A ENGINEERING
DRAWN BY: ADA
DATE DRAWN: JUNE 2021
P8 NUMBER: 226078
RECOMMENDED FOR APPROVAL BY: DATE 7-27-2021
APPROVED BY: DATE 8/4/2021

FOR BIDDING PURPOSES ONLY

LAKELAND VILLAGE
LINE H
TRAFFIC HANDLING PLAN
TRAFFIC DETOUR PLAN

PROJECT NO. 3-0-00020
DRAWING NO. 3-0207
SHEET NO. TH11 OF TH25

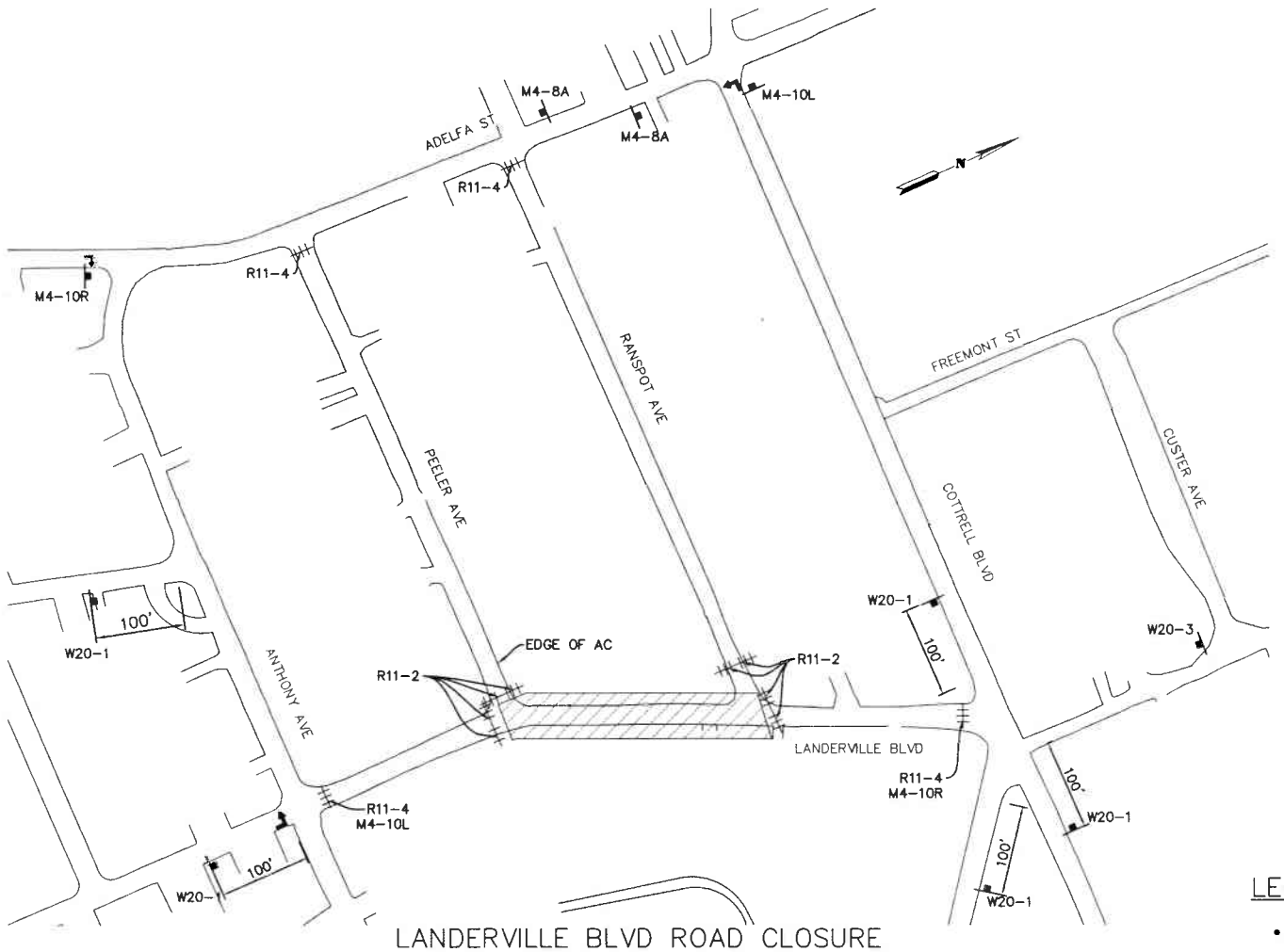

LANDERVILLE BLVD ROAD CLOSURE DETOUR FOR STORM DRAIN IMPROVEMENTS BETWEEN RANSPOT AVE AND PEELER AVE

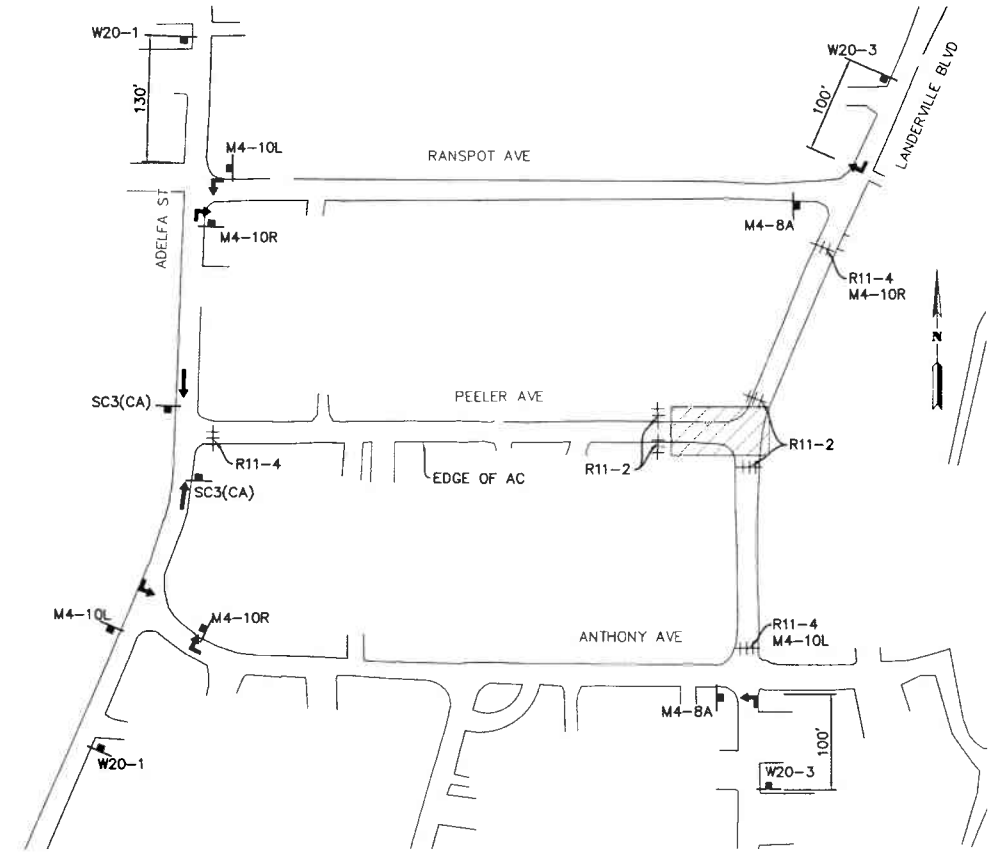

PEELER AVE ROAD CLOSURE DETOUR FOR STORM DRAIN IMPROVEMENTS BETWEEN ADELFA ST AND LANDERVILLE BLVD

LEGEND

- CONE
- FLAGGER
- CONSTRUCTION SIGNS
- TYPE 3 BARRICADE
- K-RAIL (CONCRETE BARRICADE)
- CONSTRUCTION AREA

TRAFFIC CONTROL SIGN LEGEND

M4-10	DETOUR WITH ARROW
R11-2	ROAD CLOSED
R11-4	ROAD CLOSED TO THROUGH TRAFFIC
SC3(CA)	DETOUR WITH ARROW (FORWARD)
W20-1	ROAD WORK AHEAD
W20-3	ROAD CLOSED AHEAD

RIVERSIDE COUNTY FLOOD CONTROL AND WATER CONSERVATION DISTRICT (RCFC & WCD) GENERAL TRAFFIC CONTROL NOTES:

1. THESE ARE THE MINIMUM TRAFFIC CONTROL REQUIREMENTS. ADDITIONAL TRAFFIC CONTROL MAY BE REQUIRED TO FACILITATE PUBLIC SAFETY AND TRAFFIC FLOW IF DEEMED NECESSARY BY THE ENGINEER OR RIVERSIDE COUNTY TRANSPORTATION DEPARTMENT.
2. ALL TRAFFIC CONTROL DEVICES SHALL CONFORM TO THE FHWA'S MANUAL ON UNIFORM TRAFFIC CONTROL DEVICES (MUTCD) 2014 AND THE MUTCD 2014 (REV 3) CALIFORNIA SUPPLEMENT, LATEST ADDITION AND WITH ALL OTHER APPLICABLE FEDERAL, STATE AND LOCAL LAWS.
3. SPECIAL CONSTRUCTION SIGNS SHALL BE MANUFACTURED USING MINIMUM 3" UPPER CASE BLACK LETTERS AND A BLACK BORDER ON AN ORANGE REFLECTIVE BACKGROUND.
4. FLASHING YELLOW BEACONS, TYPE B, SHALL ILLUMINATE ALL W20 SIGNS AND TYPE III BARRICADES USED AT THE WORK AREA DURING HOURS OF DARKNESS.
5. ALL TRENCHES SHALL BE BACK FILLED OR PLATED AT THE END OF EACH WORK DAY. PLATES SHALL BE PLACED FLUSH WITH EXISTING ASPHALT OR SO AS TO CREATE A SMOOTH DRIVING SURFACE TO THE SATISFACTION OF THE RESIDENT ENGINEER.
6. PRIVATE PROPERTY AND EMERGENCY ACCESS SHALL BE MAINTAINED AT ALL TIMES EXCEPT AS PERMITTED BY RESIDENT ENGINEER
7. MINIMUM LANE WIDTH TO BE 12 FEET OR AS DIRECTED BY THE RESIDENT ENGINEER.
8. ADDITIONAL "STOP" SIGNS MAY BE NEEDED IF EQUIPMENT/WORKERS ARE BLOCKING THEM FROM VIEW.
9. CONTRACTOR SHALL POST TEMPORARY "NO-PARKING" SIGNS ALONG THE SIDE OF THE STREET TO BE AFFECTED BY THIS TRAFFIC CONTROL PLAN AT LEAST 48 HOURS PRIOR TO COMMENCEMENT OF CONSTRUCTION ACTIVITIES.
10. CONTRACTOR SHALL MAINTAIN ACCESS TO RESIDENTIAL DRIVEWAYS WITHIN CONSTRUCTION WORK AREA AT ALL TIMES

CONSTRUCTION DRAWING SET DATED 22 JUNE, 2021

FOR BIDDING PURPOSES ONLY

LINSCOTT, LAW & GREENSPAN, ENGINEERS
TRANSPORTATION PLANNING · TRAFFIC ENGINEERING · PARKING
600 South Lake Avenue, Suite 500 Pasadena, Ca 91106 (626) 796-2322
2 Executive Circle, Suite 250 Irvine, CA 92614 (949) 825-6175
4542 Ruffner Street, Suite 104, San Diego, Ca 92111 (858) 300-8860

K&A Engineering, Inc.
ENGINEERING · LAND PLANNING · SURVEYING
357 N. SHERIDAN STREET
SUITE 117
CORONA, CALIFORNIA 92880
TEL. (951) 279-1800
FAX (951) 279-4380

REGISTERED PROFESSIONAL ENGINEER DONALD W. BECK No. 28949 CIVIL STATE OF CALIFORNIA

Donald Beck 4/20/2020
ENGINEER R.C.E. 28949 DATE

COUNTY OF RIVERSIDE TRANSPORTATION DEPARTMENT
RECMD COUNTY OVERSIGHT ENGINEER 8/11/21
APPROVES AS TO COMPLIANCE WITH APPLICABLE COUNTY STANDARDS AND PRACTICES.
REGISTRATION # 76450 DATE SIGNED

Don't Dig...Until You Call U.S.A. Toll Free DIAL 811 for the location of buried utility lines. Don't disrupt vital services.
TWO WORKING DAYS BEFORE YOU DIG

BENCH MARK
NAD 83 - COH 88 CCS83, ZONE 6
RCFC Z 15502
SET MAG NAIL W/ RCFC WCD TAG FLUSH
E 6,226,565.52 N 2,177,350.50
DATED: 2011 ELEV: 1,401.46

REF	DESCRIPTION	APPR.	DATE
	REVISIONS		

RIVERSIDE COUNTY FLOOD CONTROL AND WATER CONSERVATION DISTRICT

DESIGNED BY: K&A ENGINEERING
DRAWN BY: ADA
DATE DRAWN: JUNE 2021
PB NUMBER: 226078

RECOMMENDED FOR APPROVAL BY: DATE 7-27-2021
APPROVED BY: DATE 8/4/2021

LAKELAND VILLAGE
LINE H
TRAFFIC HANDLING PLAN

TRAFFIC DETOUR PLAN

PROJECT NO. 3-0-00020
DRAWING NO. 3-0207
SHEET NO. TH12 of TH25

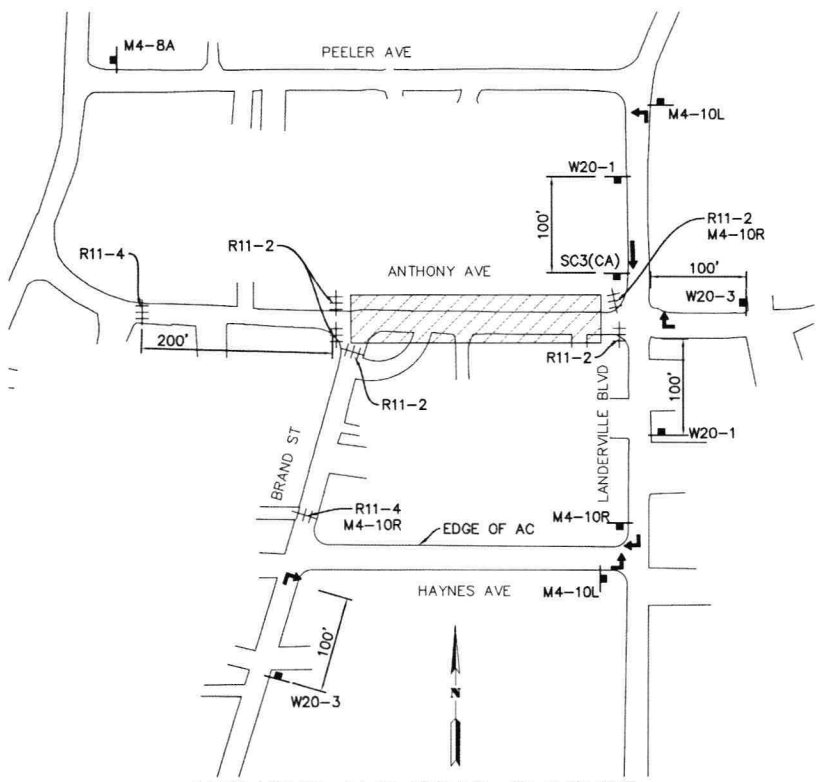

ANTHONY AVE ROAD CLOSURE DETOUR FOR STORM DRAIN IMPROVEMENTS BETWEEN BRAND STREET AND LANDERVILLE BLVD

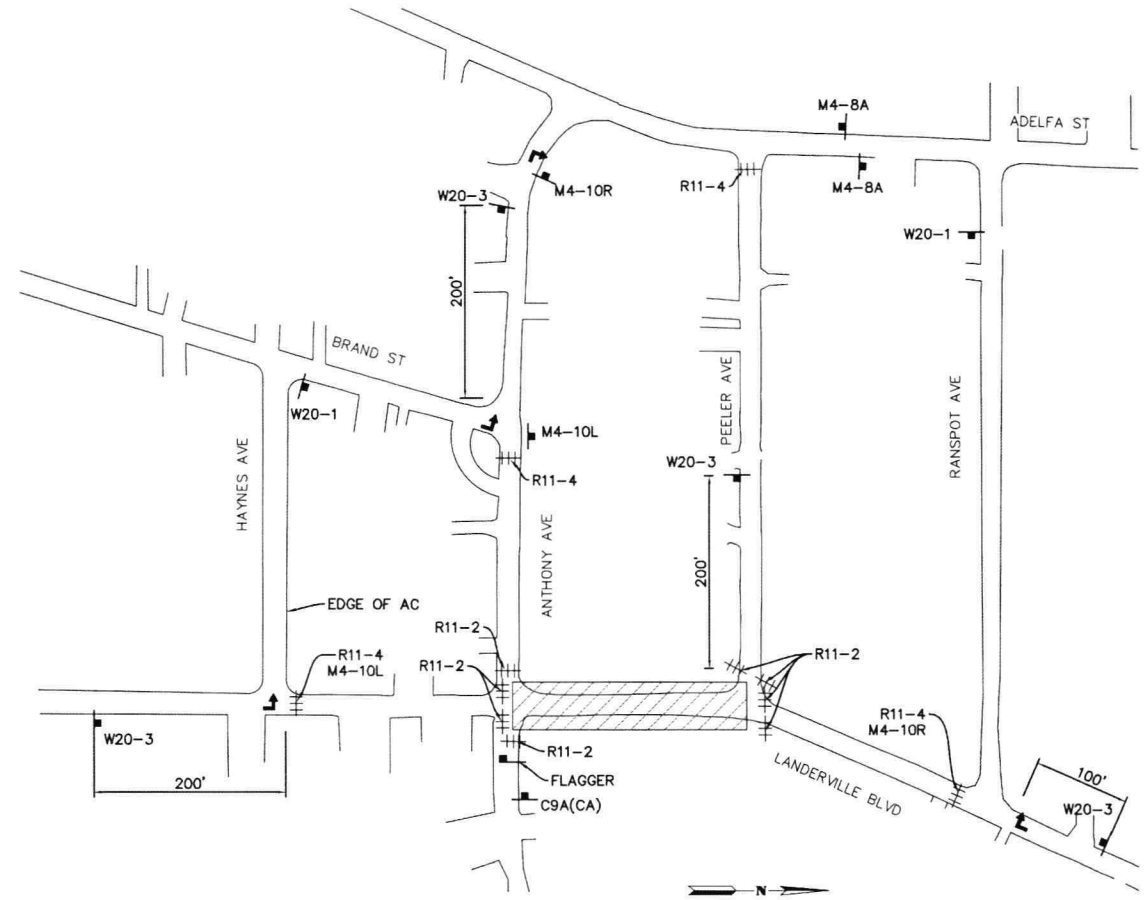

LANDERVILLE BLVD ROAD CLOSURE DETOUR FOR STORM DRAIN IMPROVEMENTS BETWEEN ANTHONY AVE AND PEELER AVE

LEGEND

- CONE
- FLAGGER
- CONSTRUCTION SIGNS
- TYPE 3 BARRICADE
- K-RAIL (CONCRETE BARRICADE)
- CONSTRUCTION AREA

TRAFFIC CONTROL SIGN LEGEND

C9A(CA)	FLAG MAN PICTURE
M4-8A	END DETOUR
M4-10	DETOUR WITH ARROW
R11-2	ROAD CLOSED
R11-4	ROAD CLOSED TO THROUGH TRAFFIC
W20-1	ROAD WORK AHEAD
W20-3	ROAD CLOSED AHEAD

RIVERSIDE COUNTY FLOOD CONTROL AND WATER CONSERVATION DISTRICT (RCFC & WCD) GENERAL TRAFFIC CONTROL NOTES:

1. THESE ARE THE MINIMUM TRAFFIC CONTROL REQUIREMENTS. ADDITIONAL TRAFFIC CONTROL MAY BE REQUIRED TO FACILITATE PUBLIC SAFETY AND TRAFFIC FLOW IF DEEMED NECESSARY BY THE ENGINEER OR RIVERSIDE COUNTY TRANSPORTATION DEPARTMENT.
2. ALL TRAFFIC CONTROL DEVICES SHALL CONFORM TO THE FHWA'S MANUAL ON UNIFORM TRAFFIC CONTROL DEVICES (MUTCD) 2014 AND THE MUTCD 2014 (REV 3) CALIFORNIA SUPPLEMENT, LATEST ADDITION AND WITH ALL OTHER APPLICABLE FEDERAL, STATE AND LOCAL LAWS.
3. SPECIAL CONSTRUCTION SIGNS SHALL BE MANUFACTURED USING MINIMUM 3" UPPER CASE BLACK LETTERS AND A BLACK BORDER ON AN ORANGE REFLECTIVE BACKGROUND.
4. FLASHING YELLOW BEACONS, TYPE B, SHALL ILLUMINATE ALL W20 SIGNS AND TYPE III BARRICADES USED AT THE WORK AREA DURING HOURS OF DARKNESS.
5. ALL TRENCHES SHALL BE BACK FILLED OR PLATED AT THE END OF EACH WORK DAY. PLATES SHALL BE PLACED FLUSH WITH EXISTING ASPHALT OR SO AS TO CREATE A SMOOTH DRIVING SURFACE TO THE SATISFACTION OF THE RESIDENT ENGINEER.
6. PRIVATE PROPERTY AND EMERGENCY ACCESS SHALL BE MAINTAINED AT ALL TIMES EXCEPT AS PERMITTED BY RESIDENT ENGINEER
7. MINIMUM LANE WIDTH TO BE 12 FEET OR AS DIRECTED BY THE RESIDENT ENGINEER.
8. ADDITIONAL "STOP" SIGNS MAY BE NEEDED IF EQUIPMENT/WORKERS ARE BLOCKING THEM FROM VIEW.
9. CONTRACTOR SHALL POST TEMPORARY "NO-PARKING" SIGNS ALONG THE SIDE OF THE STREET TO BE AFFECTED BY THIS TRAFFIC CONTROL PLAN AT LEAST 48 HOURS PRIOR TO COMMENCEMENT OF CONSTRUCTION ACTIVITIES.
10. CONTRACTOR SHALL MAINTAIN ACCESS TO RESIDENTIAL DRIVEWAYS WITHIN CONSTRUCTION WORK AREA AT ALL TIMES

CONSTRUCTION DRAWING SET DATED 22 JUNE, 2021

FOR BIDDING PURPOSES ONLY

LINSCOTT, LAW & GREENSPAN, ENGINEERS
TRANSPORTATION PLANNING · TRAFFIC ENGINEERING · PARKING
600 South Lake Avenue, Suite 500 Pasadena, Ca 91106 (626) 796-2322
2 Executive Circle, Suite 250 Irvine, CA 92614 (949) 825-6175
4542 Ruffner Street, Suite 100, San Diego, Ca 92111 (858) 300-8800

K&A ENGINEERING LAND PLANNING SURVEYING
Engineering, Inc.
357 N. SHERIDAN STREET SUITE 117 CORONA, CALIFORNIA 92880 TEL. (951) 279-1800 FAX (951) 279-4380

REGISTERED PROFESSIONAL ENGINEER DONALD W. BERGH No. 28949 CIVIL STATE OF CALIFORNIA

Donald Bergh 4/20/2020
ENGINEER R.C.E. 28949 DATE:

COUNTY OF RIVERSIDE TRANSPORTATION DEPARTMENT
RECMD COUNTY OVERSIGHT ENGINEER 8/11/21
APPROVES AS TO COMPLIANCE WITH APPLICABLE COUNTY STANDARDS AND PRACTICES.
REGISTRATION # 76450 DATE SIGNED

Don't Dig...Until You Call U.S.A. Toll Free DIAL 811 for the location of buried utility lines. Don't disrupt vital services.
BURIED CABLE
TWO WORKING DAYS BEFORE YOU DIG

BENCH MARK
NAD 83 – COH 88 CCS83, ZONE 6
RCFC Z 15502
SET MAG NAIL W/ RCFC WCD TAG FLUSH
E 6,226,565.52 N 2,177,350.50
DATED: 2011 ELEV.: 1,401.46

REF.	REVISIONS	APPR.	DATE

RIVERSIDE COUNTY FLOOD CONTROL AND WATER CONSERVATION DISTRICT

DESIGNED BY: K&A ENGINEERING
DRAWN BY: ADA
DATE DRAWN: JUNE 2021
PB NUMBER: 226078

RECOMMENDED FOR APPROVAL BY: DATE 7-27-2021
APPROVED BY: DATE 8/4/2021

LAKELAND VILLAGE
LINE H
TRAFFIC HANDLING PLAN

TRAFFIC DETOUR PLAN

PROJECT NO. 3-0-00020
DRAWING NO. 3-0207
SHEET NO. TH13 OF TH25

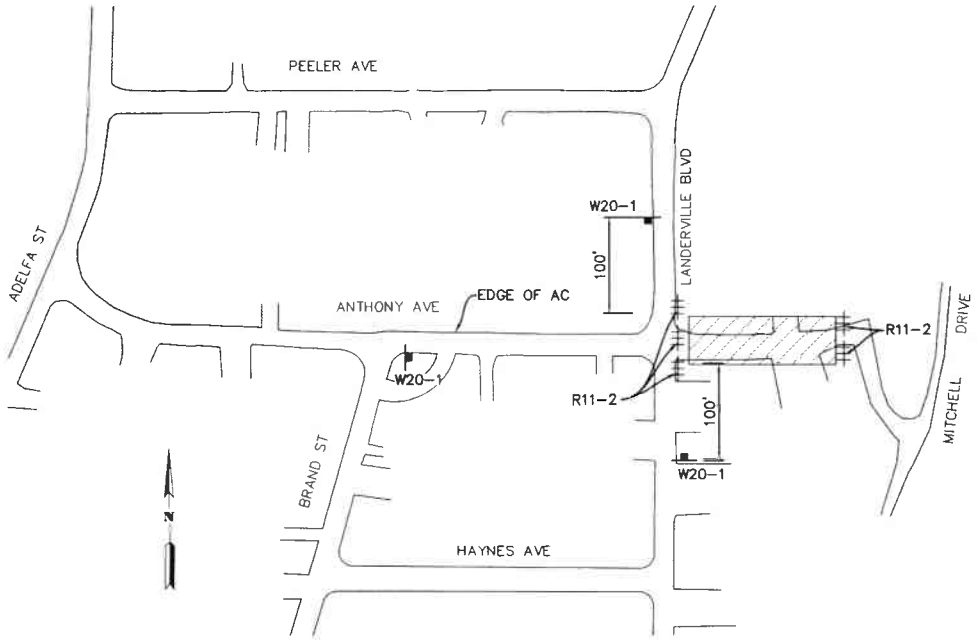

ANTHONY AVE ROAD CLOSURE
DETOUR FOR STORM DRAIN
IMPROVEMENTS AT LANDERVILLE BLVD

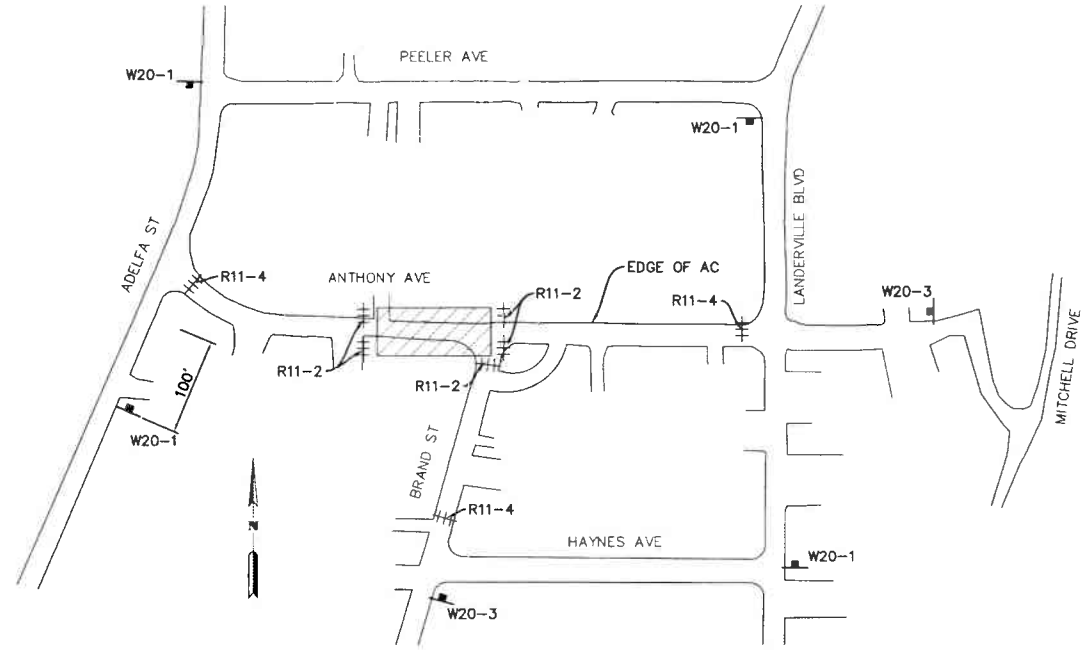

ANTHONY AVE ROAD CLOSURE DETOUR
FOR STORM DRAIN IMPROVEMENTS
BETWEEN BRAND ST AND ADELFA ST

REFER TO SHEET TC22 FOR STRUCTURE
CONSTRUCTION ROAD CLOSURE

LEGEND

- CONE
- FLAGGER
- CONSTRUCTION SIGNS
- TYPE 3 BARRICADE
- K-RAIL (CONCRETE BARRICADE)
- CONSTRUCTION AREA

TRAFFIC CONTROL SIGN LEGEND

R11-2	ROAD CLOSED
R11-4	ROAD CLOSED TO THROUGH TRAFFIC
W20-1	ROAD WORK AHEAD
W20-3	ROAD CLOSED AHEAD

RIVERSIDE COUNTY FLOOD CONTROL AND WATER CONSERVATION DISTRICT (RCFC & WCD) GENERAL TRAFFIC CONTROL NOTES:

1. THESE ARE THE MINIMUM TRAFFIC CONTROL REQUIREMENTS. ADDITIONAL TRAFFIC CONTROL MAY BE REQUIRED TO FACILITATE PUBLIC SAFETY AND TRAFFIC FLOW IF DEEMED NECESSARY BY THE ENGINEER OR RIVERSIDE COUNTY TRANSPORTATION DEPARTMENT.
2. ALL TRAFFIC CONTROL DEVICES SHALL CONFORM TO THE FHWA'S MANUAL ON UNIFORM TRAFFIC CONTROL DEVICES (MUTCD) 2014 AND THE MUTCD 2014 (REV 3) CALIFORNIA SUPPLEMENT, LATEST ADDITION AND WITH ALL OTHER APPLICABLE FEDERAL, STATE AND LOCAL LAWS.
3. SPECIAL CONSTRUCTION SIGNS SHALL BE MANUFACTURED USING MINIMUM 3" UPPER CASE BLACK LETTERS AND A BLACK BORDER ON AN ORANGE REFLECTIVE BACKGROUND.
4. FLASHING YELLOW BEACONS, TYPE B, SHALL ILLUMINATE ALL W20 SIGNS AND TYPE III BARRICADES USED AT THE WORK AREA DURING HOURS OF DARKNESS.
5. ALL TRENCHES SHALL BE BACK FILLED OR PLATED AT THE END OF EACH WORK DAY. PLATES SHALL BE PLACED FLUSH WITH EXISTING ASPHALT OR SO AS TO CREATE A SMOOTH DRIVING SURFACE TO THE SATISFACTION OF THE RESIDENT ENGINEER.
6. PRIVATE PROPERTY AND EMERGENCY ACCESS SHALL BE MAINTAINED AT ALL TIMES EXCEPT AS PERMITTED BY RESIDENT ENGINEER
7. MINIMUM LANE WIDTH TO BE 12 FEET OR AS DIRECTED BY THE RESIDENT ENGINEER.
8. ADDITIONAL "STOP" SIGNS MAY BE NEEDED IF EQUIPMENT/WORKERS ARE BLOCKING THEM FROM VIEW.
9. CONTRACTOR SHALL POST TEMPORARY "NO-PARKING" SIGNS ALONG THE SIDE OF THE STREET TO BE AFFECTED BY THIS TRAFFIC CONTROL PLAN AT LEAST 48 HOURS PRIOR TO COMMENCEMENT OF CONSTRUCTION ACTIVITIES.
10. CONTRACTOR SHALL MAINTAIN ACCESS TO RESIDENTIAL DRIVEWAYS WITHIN CONSTRUCTION WORK AREA AT ALL TIMES

CONSTRUCTION DRAWING SET DATED 22 JUNE, 2021

FOR BIDDING PURPOSES ONLY

LINSCOTT, LAW & GREENSPAN, ENGINEERS
TRANSPORTATION PLANNING · TRAFFIC ENGINEERING · PARKING
☐ 600 South Lake Avenue, Suite 500 Pasadena, Ca 91106 (626) 796-2322
■ 3 Executive Circle, Suite 250 Irvine, CA 92614 (949) 825-6175
☐ 4542 Ruffner Street, Suite 190, San Diego, Ca 92111 (858) 300-8860

K&A Engineering, Inc.
ENGINEERING
LAND PLANNING
SURVEYING
357 N. SHERIDAN STREET
SUITE 117
CORONA, CALIFORNIA 92880
TEL. (951) 279-1800
FAX (951) 279-4380

Donald Berger 4/20/2020
ENGINEER R.C.E. 28949 DATE

REGISTERED PROFESSIONAL ENGINEER DONALD W BERGER No. 28949 CIVIL STATE OF CALIFORNIA

COUNTY OF RIVERSIDE
TRANSPORTATION DEPARTMENT
RECMD COUNTY OVERSIGHT ENGINEER 8/11/21
APPROVES AS TO COMPLIANCE WITH APPLICABLE COUNTY STANDARDS AND PRACTICES.
REGISTRATION # 76450 DATE SIGNED

Don't Dig...Until You Call U.S.A. Toll Free
DIAL 811
for the location of buried utility lines.
Don't disrupt vital services.
TWO WORKING DAYS BEFORE YOU DIG

BENCH MARK
NAD 83 – COH 88 CCS83, ZONE 6
RCFC Z 15502
SET MAG NAIL W/ RCFC WCD TAG FLUSH
E 6,226,565.52 N 2,177,350.50
DATED: 2011 ELEV 1,401.46

REVISIONS

REF.	DESCRIPTION	APPR.	DATE

RIVERSIDE COUNTY FLOOD CONTROL AND WATER CONSERVATION DISTRICT
DESIGNED BY: K&A ENGINEERING
DRAWN BY: ADA
DATE DRAWN: JUNE 2021
PB NUMBER: 226078
RECOMMENDED FOR APPROVAL BY: DATE 7-27-2021
APPROVED BY: DATE 8/4/2021

LAKELAND VILLAGE LINE H
TRAFFIC HANDLING PLAN
TRAFFIC DETOUR PLAN

PROJECT NO. 3-0-00020
DRAWING NO. 3-0207
SHEET NO. TH14 of TH25

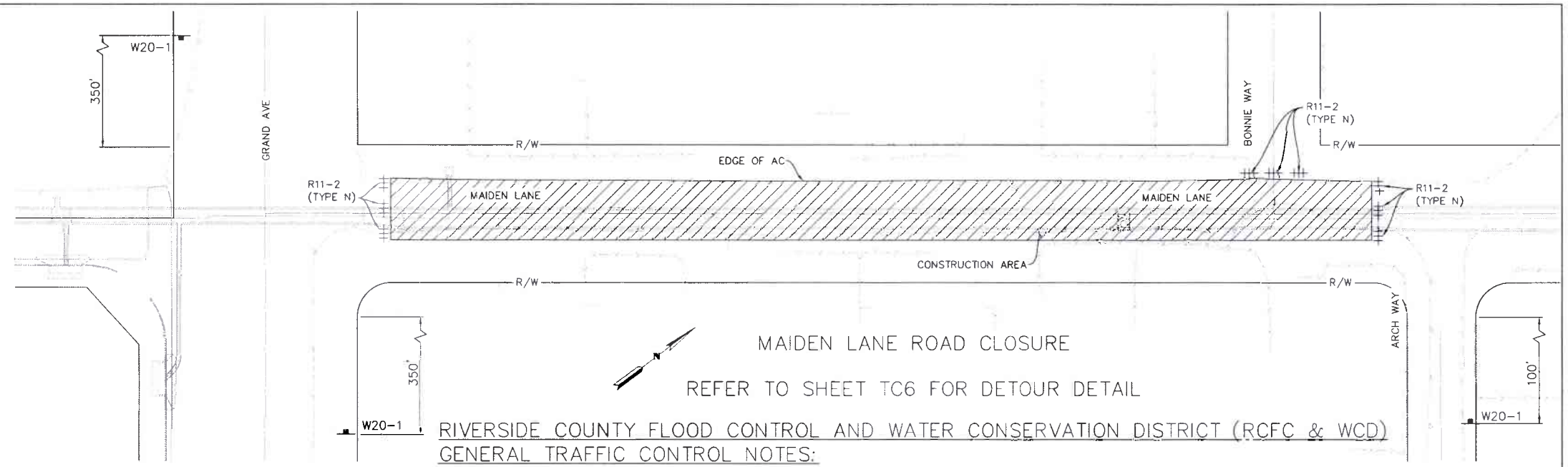

MAIDEN LANE ROAD CLOSURE

REFER TO SHEET TC6 FOR DETOUR DETAIL

RIVERSIDE COUNTY FLOOD CONTROL AND WATER CONSERVATION DISTRICT (RCFC & WCD) GENERAL TRAFFIC CONTROL NOTES:

1. THESE ARE THE MINIMUM TRAFFIC CONTROL REQUIREMENTS. ADDITIONAL TRAFFIC CONTROL MAY BE REQUIRED TO FACILITATE PUBLIC SAFETY AND TRAFFIC FLOW IF DEEMED NECESSARY BY THE ENGINEER OR RIVERSIDE COUNTY TRANSPORTATION DEPARTMENT.
2. ALL TRAFFIC CONTROL DEVICES SHALL CONFORM TO THE FHWA'S MANUAL ON UNIFORM TRAFFIC CONTROL DEVICES (MUTCD) 2014 AND THE MUTCD 2014 (REV 3) CALIFORNIA SUPPLEMENT, LATEST ADDITION AND WITH ALL OTHER APPLICABLE FEDERAL, STATE AND LOCAL LAWS.
3. SPECIAL CONSTRUCTION SIGNS SHALL BE MANUFACTURED USING MINIMUM 3" UPPER CASE BLACK LETTERS AND A BLACK BORDER ON AN ORANGE REFLECTIVE BACKGROUND.
4. FLASHING YELLOW BEACONS, TYPE B, SHALL ILLUMINATE ALL W20 SIGNS AND TYPE III BARRICADES USED AT THE WORK AREA DURING HOURS OF DARKNESS.
5. ALL TRENCHES SHALL BE BACK FILLED OR PLATED AT THE END OF EACH WORK DAY. PLATES SHALL BE PLACED FLUSH WITH EXISTING ASPHALT OR SO AS TO CREATE A SMOOTH DRIVING SURFACE TO THE SATISFACTION OF THE RESIDENT ENGINEER.
6. PRIVATE PROPERTY AND EMERGENCY ACCESS SHALL BE MAINTAINED AT ALL TIMES EXCEPT AS PERMITTED BY RESIDENT ENGINEER
7. MINIMUM LANE WIDTH TO BE 12 FEET OR AS DIRECTED BY THE RESIDENT ENGINEER.
8. ADDITIONAL "STOP" SIGNS MAY BE NEEDED IF EQUIPMENT/WORKERS ARE BLOCKING THEM FROM VIEW.
9. CONTRACTOR SHALL POST TEMPORARY "NO-PARKING" SIGNS ALONG THE SIDE OF THE STREET TO BE AFFECTED BY THIS TRAFFIC CONTROL PLAN AT LEAST 48 HOURS PRIOR TO COMMENCEMENT OF CONSTRUCTION ACTIVITIES.
10. CONTRACTOR SHALL MAINTAIN ACCESS TO RESIDENTIAL DRIVEWAYS WITHIN CONSTRUCTION WORK AREA AT ALL TIMES

NOTE: CONTRACTOR SHALL INSTALL K-RAIL SETUP TO PROHIBIT UNAUTHORIZED ACCESS TO ANY OPEN TRENCH/WORK AREA AT ALL TIMES

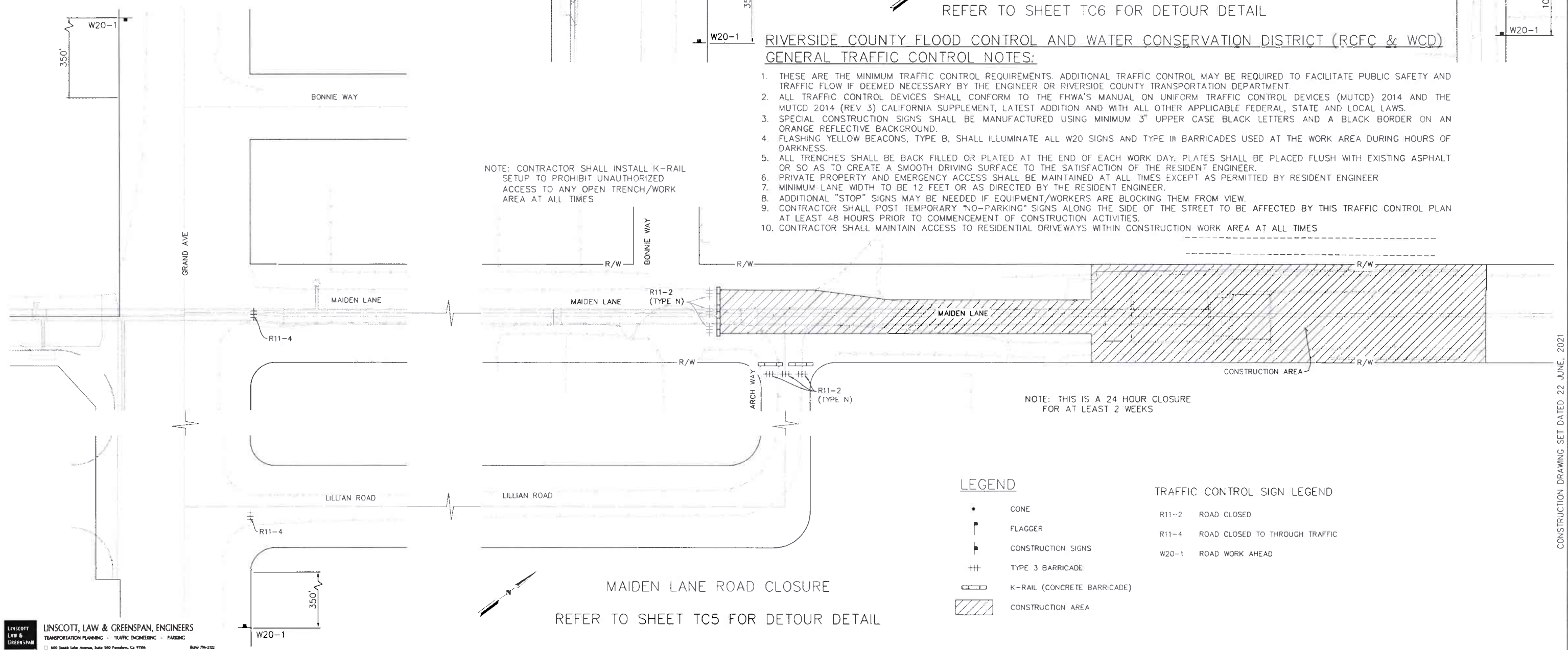

NOTE: THIS IS A 24 HOUR CLOSURE FOR AT LEAST 2 WEEKS

MAIDEN LANE ROAD CLOSURE

REFER TO SHEET TC5 FOR DETOUR DETAIL

LEGEND

- CONE
- FLAGGER
- CONSTRUCTION SIGNS
- TYPE 3 BARRICADE
- K-RAIL (CONCRETE BARRICADE)
- CONSTRUCTION AREA

TRAFFIC CONTROL SIGN LEGEND

R11-2	ROAD CLOSED
R11-4	ROAD CLOSED TO THROUGH TRAFFIC
W20-1	ROAD WORK AHEAD

CONSTRUCTION DRAWING SET DATED 22 JUNE, 2021

LINSCOTT, LAW & GREENSPAN, ENGINEERS
TRANSPORTATION PLANNING · TRAFFIC ENGINEERING · PARKING
600 South Lake Avenue, Suite 580 Pasadena, Ca 91106 (626) 796-2322
2 Executive Circle, Suite 250 Irvine, CA 92614 (949) 825-6175
6541 Surfmar Street, Suite 100, San Diego, Ca 92111 (858) 300-8800

K&A Engineering, Inc
ENGINEERING
LAND PLANNING
SURVEYING
357 N. SHERIDAN STREET
SUITE 117
CORONA, CALIFORNIA 92880
TEL. (951) 279-1800
FAX (951) 279-4380

REGISTERED PROFESSIONAL ENGINEER DONALD W BERST No 28949 CIVIL STATE OF CALIFORNIA

Donald Berst 4/20/2020
ENGINEER R.C.E. 28949 DATE

COUNTY OF RIVERSIDE TRANSPORTATION DEPARTMENT
REC'MD COUNTY OVERSIGHT ENGINEER 8/4/21
APPROVES AS TO COMPLIANCE WITH APPLICABLE COUNTY STANDARDS AND PRACTICES
REGISTRATION # 76450 DATE SIGNED

Don't Dig...Until You Call U.S.A. Toll Free DIAL 811 for the location of buried utility lines. Don't disrupt vital services.
TWO WORKING DAYS BEFORE YOU DIG

BENCH MARK
NAD 83 - COH 88 CCS83, ZONE 6
RCFC Z 15502
SET MAG NAIL W/ RCFC WCD TAG FLUSH
E 6,226,565.52 N 2,177,350.50
DATED: 2011 ELEV. 1,401.46

REVISIONS			
REF	DESCRIPTION	APPR	DATE

RIVERSIDE COUNTY FLOOD CONTROL AND WATER CONSERVATION DISTRICT
DESIGNED BY: K&A ENGINEERING
DRAWN BY: ADA
DATE DRAWN: JUNE 2021
P.B. NUMBER: 226078
RECOMMENDED FOR APPROVAL BY: DATE 7-27-2021
APPROVED BY: DATE 8/4/2021

FOR BIDDING PURPOSES ONLY

LAKELAND VILLAGE
LINE H
TRAFFIC HANDLING PLAN
STREET CLOSURE PLAN

PROJECT NO. 3-0-00020
DRAWING NO. 3-0207
SHEET NO. TH15 OF TH25

LEGEND

- CONE
- FLAGGER
- CONSTRUCTION SIGNS
- TYPE 3 BARRICADE
- K-RAIL (CONCRETE BARRICADE)
- CONSTRUCTION AREA
- PCMS — PORTABLE CHANGEABLE MESSAGE SIGN

TRAFFIC CONTROL SIGN LEGEND

R3-1	NO RIGHT TURN
R3-18	NO LEFT TURN OR U-TURN
R11-2	ROAD CLOSED
W20-1	ROAD WORK AHEAD

RIVERSIDE COUNTY FLOOD CONTROL AND WATER CONSERVATION DISTRICT (RCFC & WCD) GENERAL TRAFFIC CONTROL NOTES:

1. THESE ARE THE MINIMUM TRAFFIC CONTROL REQUIREMENTS. ADDITIONAL TRAFFIC CONTROL MAY BE REQUIRED TO FACILITATE PUBLIC SAFETY AND TRAFFIC FLOW IF DEEMED NECESSARY BY THE ENGINEER OR RIVERSIDE COUNTY TRANSPORTATION DEPARTMENT.
2. ALL TRAFFIC CONTROL DEVICES SHALL CONFORM TO THE FHWA'S MANUAL ON UNIFORM TRAFFIC CONTROL DEVICES (MUTCD) 2014 AND THE MUTCD 2014 (REV 3) CALIFORNIA SUPPLEMENT, LATEST ADDITION AND WITH ALL OTHER APPLICABLE FEDERAL, STATE AND LOCAL LAWS.
3. SPECIAL CONSTRUCTION SIGNS SHALL BE MANUFACTURED USING MINIMUM 3" UPPER CASE BLACK LETTERS AND A BLACK BORDER ON AN ORANGE REFLECTIVE BACKGROUND.
4. FLASHING YELLOW BEACONS, TYPE B, SHALL ILLUMINATE ALL W20 SIGNS AND TYPE III BARRICADES USED AT THE WORK AREA DURING HOURS OF DARKNESS.
5. ALL TRENCHES SHALL BE BACK FILLED OR PLATED AT THE END OF EACH WORK DAY. PLATES SHALL BE PLACED FLUSH WITH EXISTING ASPHALT OR SO AS TO CREATE A SMOOTH DRIVING SURFACE TO THE SATISFACTION OF THE RESIDENT ENGINEER.
6. PRIVATE PROPERTY AND EMERGENCY ACCESS SHALL BE MAINTAINED AT ALL TIMES EXCEPT AS PERMITTED BY RESIDENT ENGINEER
7. MINIMUM LANE WIDTH TO BE 12 FEET OR AS DIRECTED BY THE RESIDENT ENGINEER.
8. ADDITIONAL "STOP" SIGNS MAY BE NEEDED IF EQUIPMENT/WORKERS ARE BLOCKING THEM FROM VIEW.
9. CONTRACTOR SHALL POST TEMPORARY "NO-PARKING" SIGNS ALONG THE SIDE OF THE STREET TO BE AFFECTED BY THIS TRAFFIC CONTROL PLAN AT LEAST 48 HOURS PRIOR TO COMMENCEMENT OF CONSTRUCTION ACTIVITIES.
10. CONTRACTOR SHALL MAINTAIN ACCESS TO RESIDENTIAL DRIVEWAYS WITHIN CONSTRUCTION WORK AREA AT ALL TIMES

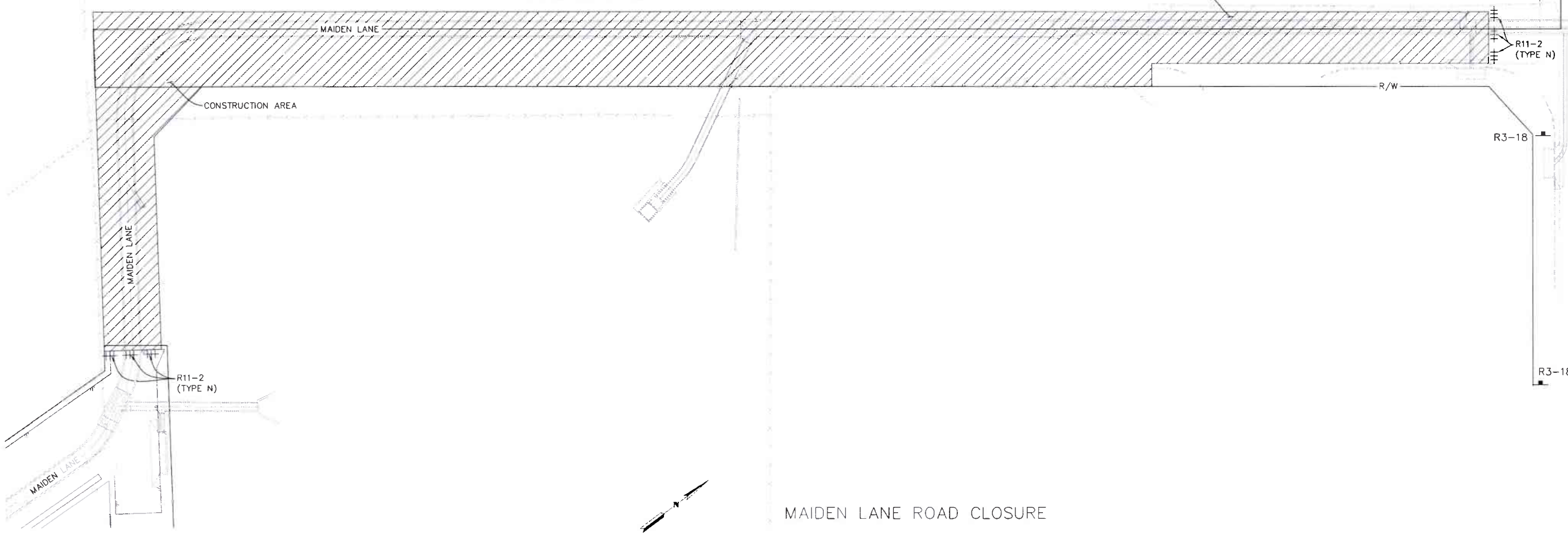

MAIDEN LANE ROAD CLOSURE

CONSTRUCTION DRAWING SET DATED 22 JUNE, 2021

LINSCOTT, LAW & GREENSPAN, ENGINEERS
TRANSPORTATION PLANNING · TRAFFIC ENGINEERING · PARKING
600 South Lake Avenue, Suite 500 Pasadena, Ca 91106 (626) 796-2322
1 Executive Circle, Suite 250 Irvine, CA 92614 (949) 825-6175
4542 Ruffner Street, Suite 100, San Diego, Ca 92111 (858) 300-8800

K&A Engineering, Inc.
ENGINEERING
LAND PLANNING
SURVEYING
357 N. SHERIDAN STREET
SUITE 117
CORONA, CALIFORNIA 92880
TEL (951) 279-1800
FAX (951) 279-4380

REGISTERED PROFESSIONAL ENGINEER — DONALD W. BERSH — No. 28949 — CIVIL — STATE OF CALIFORNIA

Donald Bersh 4/20/2020
ENGINEER R.C.E. 28949 DATE

COUNTY OF RIVERSIDE TRANSPORTATION DEPARTMENT
RECMD COUNTY OVERSIGHT ENGINEER 7/11/21
APPROVES AS TO COMPLIANCE WITH APPLICABLE COUNTY STANDARDS AND PRACTICES
REGISTRATION # 76450 DATE SIGNED

Don't Dig...Until You Call U.S.A. Toll Free
DIAL 811
for the location of buried utility lines.
Don't disrupt vital services.
TWO WORKING DAYS BEFORE YOU DIG

BENCH MARK
NAD 83 - COH 88 CCS83, ZONE 6
RCFC Z 15502
SET MAG NAIL W/ RCFC WCD TAG FLUSH
E 6,226,565.52 N 2,177,350.50
DATED: 2011 ELEV.: 1,401.46

REF	DESCRIPTION	APPR	DATE
	REVISIONS		

RIVERSIDE COUNTY FLOOD CONTROL AND WATER CONSERVATION DISTRICT
DESIGNED BY: K&A ENGINEERING
DRAWN BY: ADA
DATE DRAWN: JUNE 2021
P8 NUMBER: 226078
RECOMMENDED FOR APPROVAL BY: DATE 7-27-2021
APPROVED BY: DATE 8/4/2021

FOR BIDDING PURPOSES ONLY

LAKELAND VILLAGE
LINE H
TRAFFIC HANDLING PLAN
STREET CLOSURE PLAN

PROJECT NO. 3-0-00020
DRAWING NO. 3-0207
SHEET NO. TH16 OF TH25

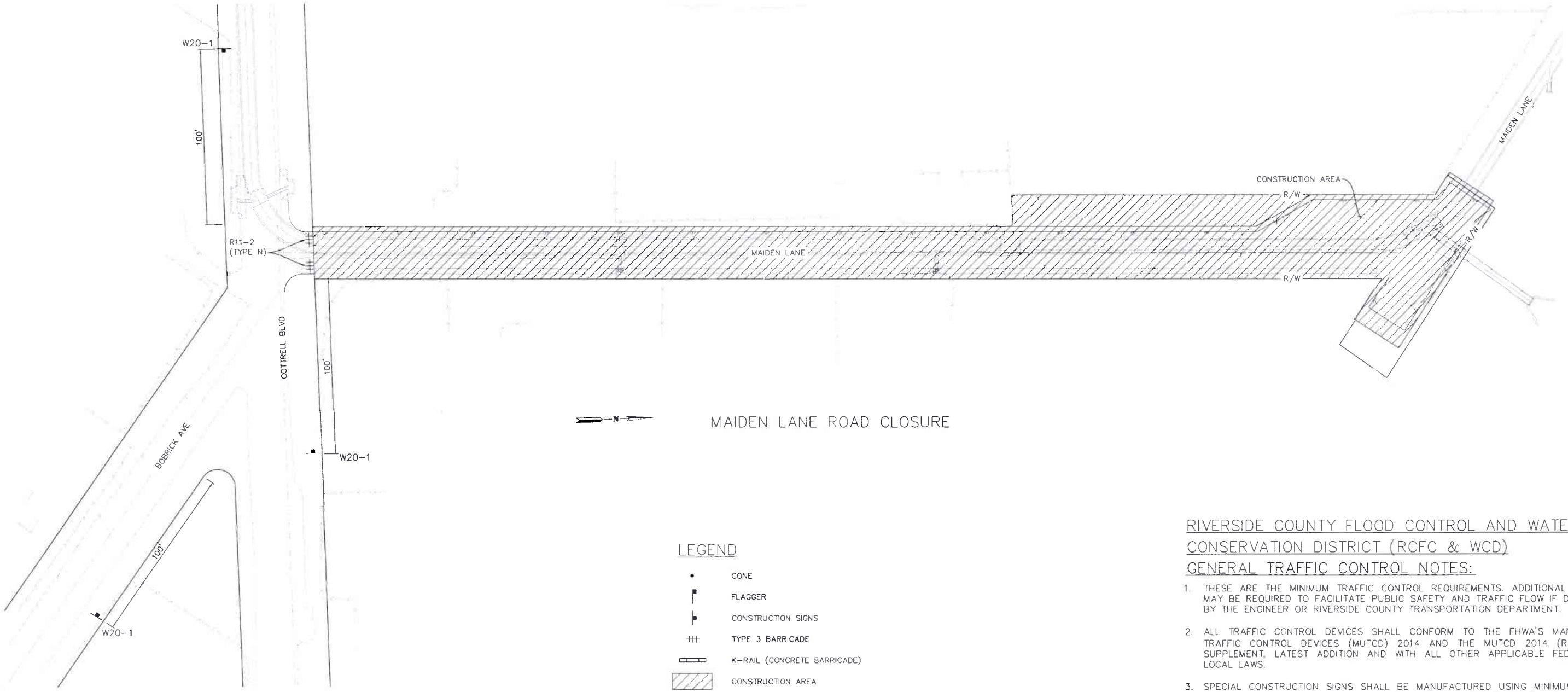

LEGEND

- CONE
- FLAGGER
- CONSTRUCTION SIGNS
- TYPE 3 BARRICADE
- K-RAIL (CONCRETE BARRICADE)
- CONSTRUCTION AREA

TRAFFIC CONTROL SIGN LEGEND

R11-2	ROAD CLOSED
W20-1	ROAD WORK AHEAD

RIVERSIDE COUNTY FLOOD CONTROL AND WATER CONSERVATION DISTRICT (RCFC & WCD) GENERAL TRAFFIC CONTROL NOTES:

1. THESE ARE THE MINIMUM TRAFFIC CONTROL REQUIREMENTS. ADDITIONAL TRAFFIC CONTROL MAY BE REQUIRED TO FACILITATE PUBLIC SAFETY AND TRAFFIC FLOW IF DEEMED NECESSARY BY THE ENGINEER OR RIVERSIDE COUNTY TRANSPORTATION DEPARTMENT.
2. ALL TRAFFIC CONTROL DEVICES SHALL CONFORM TO THE FHWA'S MANUAL ON UNIFORM TRAFFIC CONTROL DEVICES (MUTCD) 2014 AND THE MUTCD 2014 (REV 3) CALIFORNIA SUPPLEMENT, LATEST ADDITION AND WITH ALL OTHER APPLICABLE FEDERAL, STATE AND LOCAL LAWS.
3. SPECIAL CONSTRUCTION SIGNS SHALL BE MANUFACTURED USING MINIMUM 3" UPPER CASE BLACK LETTERS AND A BLACK BORDER ON AN ORANGE REFLECTIVE BACKGROUND.
4. FLASHING YELLOW BEACONS, TYPE B, SHALL ILLUMINATE ALL W20 SIGNS AND TYPE III BARRICADES USED AT THE WORK AREA DURING HOURS OF DARKNESS.
5. ALL TRENCHES SHALL BE BACK FILLED OR PLATED AT THE END OF EACH WORK DAY. PLATES SHALL BE PLACED FLUSH WITH EXISTING ASPHALT OR SO AS TO CREATE A SMOOTH DRIVING SURFACE TO THE SATISFACTION OF THE RESIDENT ENGINEER.
6. PRIVATE PROPERTY AND EMERGENCY ACCESS SHALL BE MAINTAINED AT ALL TIMES EXCEPT AS PERMITTED BY RESIDENT ENGINEER
7. MINIMUM LANE WIDTH TO BE 12 FEET OR AS DIRECTED BY THE RESIDENT ENGINEER.
8. ADDITIONAL "STOP" SIGNS MAY BE NEEDED IF EQUIPMENT/WORKERS ARE BLOCKING THEM FROM VIEW.
9. CONTRACTOR SHALL POST TEMPORARY "NO-PARKING" SIGNS ALONG THE SIDE OF THE STREET TO BE AFFECTED BY THIS TRAFFIC CONTROL PLAN AT LEAST 48 HOURS PRIOR TO COMMENCEMENT OF CONSTRUCTION ACTIVITIES.
10. CONTRACTOR SHALL MAINTAIN ACCESS TO RESIDENTIAL DRIVEWAYS WITHIN CONSTRUCTION WORK AREA AT ALL TIMES

CONSTRUCTION DRAWING SET DATED 22 JUNE, 2021

FOR BIDDING PURPOSES ONLY

LINSCOTT, LAW & GREENSPAN, ENGINEERS
TRANSPORTATION PLANNING · TRAFFIC ENGINEERING · PARKING
600 South Lake Avenue, Suite 500 Pasadena, CA 91106 (626) 796-2322
2 Executive Circle, Suite 250 Irvine, CA 92614 (949) 825-6175
4542 Ruffner Street, Suite 370, San Diego, Ca 92111 (858) 300-8800

KA ENGINEERING LAND PLANNING SURVEYING
Engineering, Inc.
357 N. SHERIDAN STREET
SUITE 117
CORONA, CALIFORNIA 92880
TEL (951) 279-1800
FAX (951) 279-4380

REGISTERED PROFESSIONAL ENGINEER DONALD W. BERGH No. 28949 CIVIL STATE OF CALIFORNIA

Donald Bergh 4/20/2020
ENGINEER R.C.E. 28949 DATE

COUNTY OF RIVERSIDE
TRANSPORTATION DEPARTMENT
RECMD COUNTY OVERSIGHT ENGINEER 8/11/21
APPROVES AS TO COMPLIANCE WITH APPLICABLE COUNTY STANDARDS AND PRACTICES
REGISTRATION # 76450 DATE SIGNED

Don't Dig...Until You Call U.S.A. Toll Free
DIAL 811
for the location of buried utility lines.
Don't disrupt vital services.
BURIED CABLE
TWO WORKING DAYS BEFORE YOU DIG

BENCH MARK
NAD 83 - COH 88 CCS83, ZONE 6
RCFC Z 15502
SET MAG NAIL W/ RCFC WCD TAG FLUSH
E 6,226,565.92 N 2,177,350.50
DATED: 2011 ELEV: 1,401.46

REF	DESCRIPTION	APPR	DATE
	REVISIONS		

RIVERSIDE COUNTY FLOOD CONTROL AND WATER CONSERVATION DISTRICT
DESIGNED BY: K&A ENGINEERING
DRAWN BY: ADA
DATE DRAWN: JUNE 2021
P8 NUMBER: 226078
RECOMMENDED FOR APPROVAL BY: DATE 7-27-2021
APPROVED BY: DATE 8/4/2021

LAKELAND VILLAGE
LINE H
TRAFFIC HANDLING PLAN
STREET CLOSURE PLAN

PROJECT NO. 3-0-00020
DRAWING NO. 3-0207
SHEET NO. TH17 of TH25

NOTE: CONTRACTOR SHALL INSTALL K-RAIL SETUP TO PROHIBIT UNAUTHORIZED ACCESS TO ANY OPEN TRENCH/WORK AREA AT ALL TIMES

NOTE: THIS IS A 24 HOUR CLOSURE FOR APPROXIMATELY 2 WEEKS

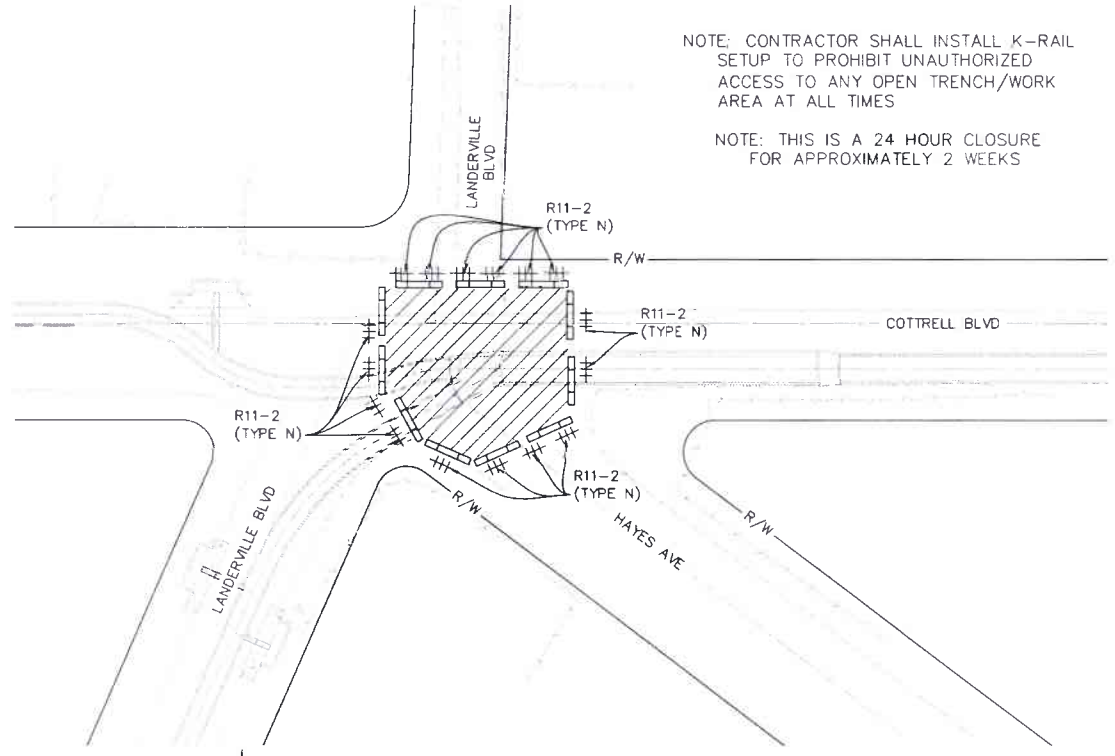

COTTRELL BLVD ROAD CLOSURE
FOR STRUCTURE CONSTRUCTION

REFER TO SHEET TC6 FOR ADJACENT STORM DRAIN IMPROVEMENTS AND DETOUR DETAIL

LEGEND

- CONE
- FLAGGER
- CONSTRUCTION SIGNS
- TYPE 3 BARRICADE
- K-RAIL (CONCRETE BARRICADE)
- CONSTRUCTION AREA

TRAFFIC CONTROL SIGN LEGEND

R11-2 ROAD CLOSED

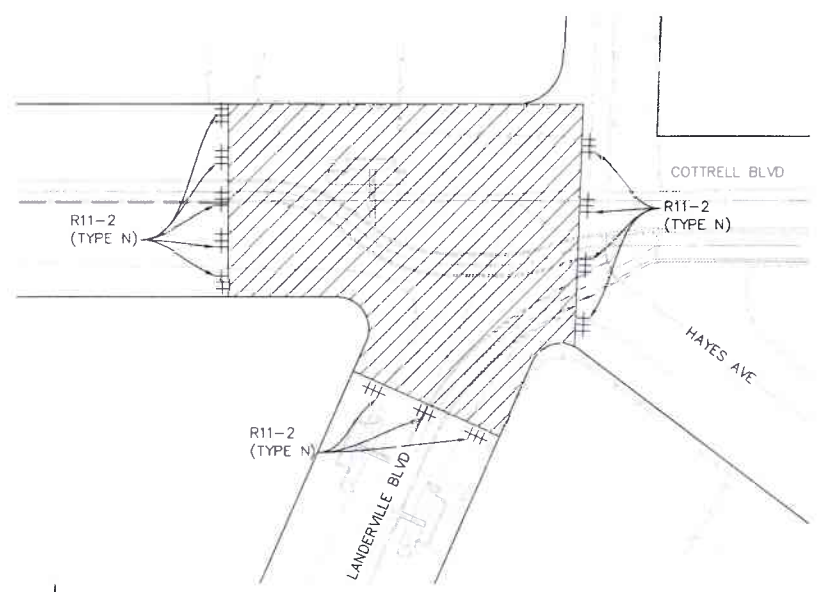

COTTRELL BLVD ROAD CLOSURE

REFER TO SHEET TC7 FOR DETOUR DETAIL

RIVERSIDE COUNTY FLOOD CONTROL AND WATER CONSERVATION DISTRICT (RCFC & WCD) GENERAL TRAFFIC CONTROL NOTES:

1. THESE ARE THE MINIMUM TRAFFIC CONTROL REQUIREMENTS. ADDITIONAL TRAFFIC CONTROL MAY BE REQUIRED TO FACILITATE PUBLIC SAFETY AND TRAFFIC FLOW IF DEEMED NECESSARY BY THE ENGINEER OR RIVERSIDE COUNTY TRANSPORTATION DEPARTMENT.
2. ALL TRAFFIC CONTROL DEVICES SHALL CONFORM TO THE FHWA'S MANUAL ON UNIFORM TRAFFIC CONTROL DEVICES (MUTCD) 2014 AND THE MUTCD 2014 (REV 3) CALIFORNIA SUPPLEMENT, LATEST ADDITION AND WITH ALL OTHER APPLICABLE FEDERAL, STATE AND LOCAL LAWS.
3. SPECIAL CONSTRUCTION SIGNS SHALL BE MANUFACTURED USING MINIMUM 3" UPPER CASE BLACK LETTERS AND A BLACK BORDER ON AN ORANGE REFLECTIVE BACKGROUND.
4. FLASHING YELLOW BEACONS, TYPE B, SHALL ILLUMINATE ALL W20 SIGNS AND TYPE III BARRICADES USED AT THE WORK AREA DURING HOURS OF DARKNESS.
5. ALL TRENCHES SHALL BE BACK FILLED OR PLATED AT THE END OF EACH WORK DAY. PLATES SHALL BE PLACED FLUSH WITH EXISTING ASPHALT OR SO AS TO CREATE A SMOOTH DRIVING SURFACE TO THE SATISFACTION OF THE RESIDENT ENGINEER.
6. PRIVATE PROPERTY AND EMERGENCY ACCESS SHALL BE MAINTAINED AT ALL TIMES EXCEPT AS PERMITTED BY RESIDENT ENGINEER
7. MINIMUM LANE WIDTH TO BE 12 FEET OR AS DIRECTED BY THE RESIDENT ENGINEER.
8. ADDITIONAL "STOP" SIGNS MAY BE NEEDED IF EQUIPMENT/WORKERS ARE BLOCKING THEM FROM VIEW.
9. CONTRACTOR SHALL POST TEMPORARY "NO-PARKING" SIGNS ALONG THE SIDE OF THE STREET TO BE AFFECTED BY THIS TRAFFIC CONTROL PLAN AT LEAST 48 HOURS PRIOR TO COMMENCEMENT OF CONSTRUCTION ACTIVITIES.
10. CONTRACTOR SHALL MAINTAIN ACCESS TO RESIDENTIAL DRIVEWAYS WITHIN CONSTRUCTION WORK AREA AT ALL TIMES

CONSTRUCTION DRAWING SET DATED 22 JUNE, 2021

LINSCOTT, LAW & GREENSPAN, ENGINEERS
TRANSPORTATION PLANNING · TRAFFIC ENGINEERING · PARKING
600 South Lake Avenue, Suite 500 Pasadena, Ca 91106 (626) 796-2322
2 Executive Circle, Suite 250 Irvine, CA 92614 (949) 825-6175
4542 Ruffner Street, Suite 180, San Diego, Ca 92111 (858) 300-8800

KA ENGINEERING LAND PLANNING SURVEYING
Engineering, Inc.
357 N. SHERIDAN STREET
SUITE 117
CORONA, CALIFORNIA 92880
TEL. (951) 279-1800
FAX (951) 279-4380

REGISTERED PROFESSIONAL ENGINEER DONALD BERG No. 28949 CIVIL STATE OF CALIFORNIA

Donald Berg 4/20/2020
ENGINEER R.C.E. 28949 DATE

COUNTY OF RIVERSIDE
TRANSPORTATION DEPARTMENT
RECMD. COUNTY OVERSIGHT ENGINEER 7/11/21
APPROVES AS TO COMPLIANCE WITH APPLICABLE COUNTY STANDARDS AND PRACTICES.
REGISTRATION # 76450 DATE SIGNED

Don't Dig...Until You Call U.S.A. Toll Free
DIAL 811
for the location of buried utility lines.
Don't disrupt vital services
BURIED CABLE
TWO WORKING DAYS BEFORE YOU DIG

BENCH MARK
NAD 83 - COH 88 CCS83, ZONE 6
RCFC Z 15502
SET MAG NAIL W/ RCFC WCD TAG FLUSH
E 6,226,565.52 N 2,177,350.50
DATED 2011 ELEV. 1,401.46

REF	DESCRIPTION	APPR	DATE
	REVISIONS		

RIVERSIDE COUNTY FLOOD CONTROL AND WATER CONSERVATION DISTRICT

DESIGNED BY: K&A ENGINEERING
DRAWN BY: ADA
DATE DRAWN: JUNE 2021
PB NUMBER: 226078

RECOMMENDED FOR APPROVAL BY: DATE 7-27-2021
APPROVED BY: DATE 8/4/2021

LAKELAND VILLAGE
LINE H
TRAFFIC HANDLING PLAN

STREET CLOSURE PLAN

PROJECT NO 3-0-00020
DRAWING NO 3-0207
SHEET NO TH18 OF TH25

FOR BIDDING PURPOSES ONLY

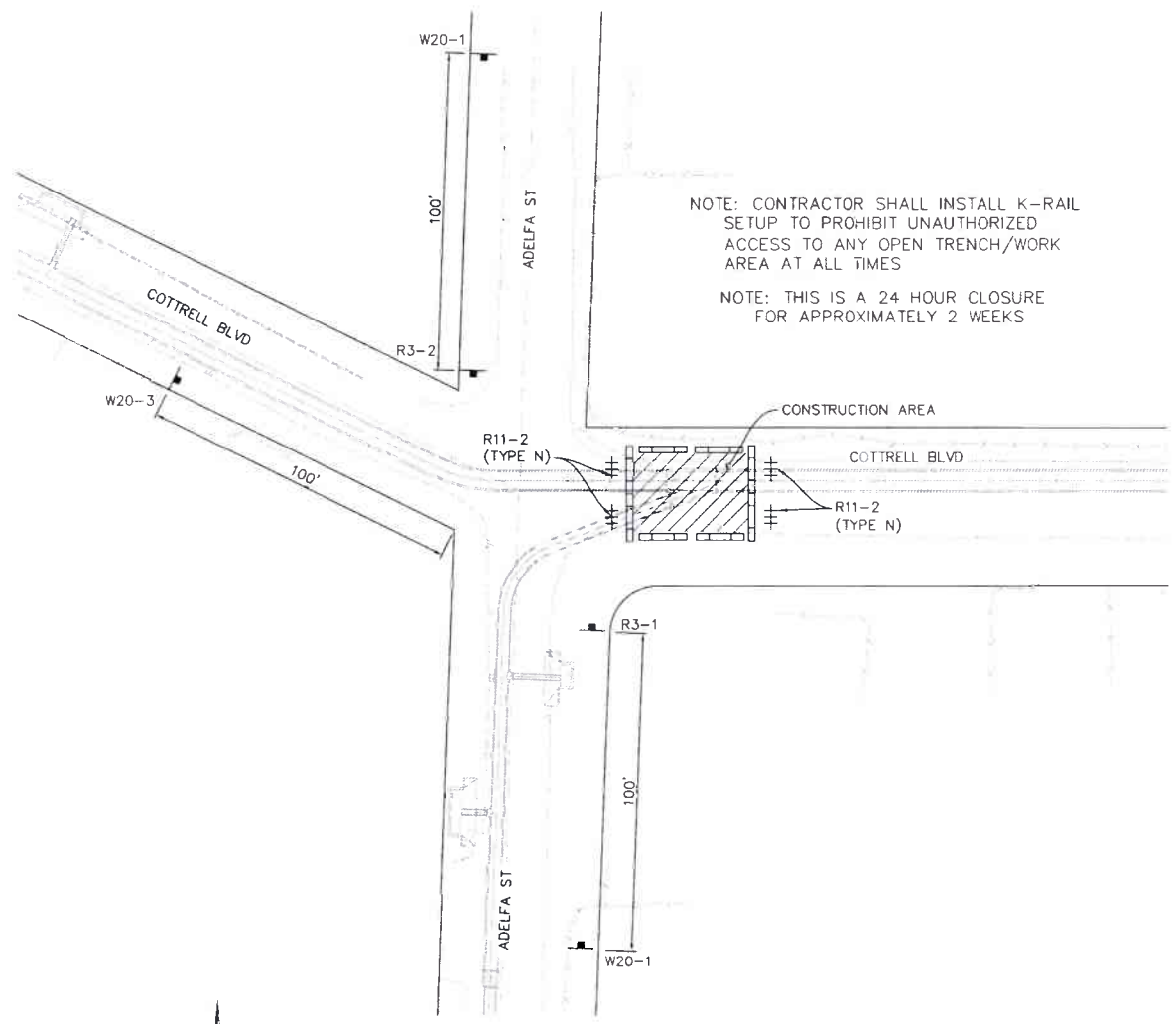

COTTRELL BLVD ROAD CLOSURE
FOR STRUCTURE CONSTRUCTION

REFER TO SHEET TC7 FOR ADJACENT
STORM DRAIN IMPROVEMENTS
AND DETOUR DETAIL

LEGEND

- CONE
- FLAGGER
- CONSTRUCTION SIGNS
- TYPE 3 BARRICADE
- K-RAIL (CONCRETE BARRICADE)
- CONSTRUCTION AREA

TRAFFIC CONTROL SIGN LEGEND

R3-1	NO RIGHT TURN
R3-2	NO LEFT TURN
R11-2	ROAD CLOSED
W20-1	ROAD WORK AHEAD
W20-3	ROAD CLOSED AHEAD

RIVERSIDE COUNTY FLOOD CONTROL AND WATER CONSERVATION DISTRICT (RCFC & WCD) GENERAL TRAFFIC CONTROL NOTES:

1. THESE ARE THE MINIMUM TRAFFIC CONTROL REQUIREMENTS. ADDITIONAL TRAFFIC CONTROL MAY BE REQUIRED TO FACILITATE PUBLIC SAFETY AND TRAFFIC FLOW IF DEEMED NECESSARY BY THE ENGINEER OR RIVERSIDE COUNTY TRANSPORTATION DEPARTMENT.
2. ALL TRAFFIC CONTROL DEVICES SHALL CONFORM TO THE FHWA'S MANUAL ON UNIFORM TRAFFIC CONTROL DEVICES (MUTCD) 2014 AND THE MUTCD 2014 (REV 3) CALIFORNIA SUPPLEMENT, LATEST ADDITION AND WITH ALL OTHER APPLICABLE FEDERAL, STATE AND LOCAL LAWS.
3. SPECIAL CONSTRUCTION SIGNS SHALL BE MANUFACTURED USING MINIMUM 3" UPPER CASE BLACK LETTERS AND A BLACK BORDER ON AN ORANGE REFLECTIVE BACKGROUND.
4. FLASHING YELLOW BEACONS, TYPE B, SHALL ILLUMINATE ALL W20 SIGNS AND TYPE III BARRICADES USED AT THE WORK AREA DURING HOURS OF DARKNESS.
5. ALL TRENCHES SHALL BE BACK FILLED OR PLATED AT THE END OF EACH WORK DAY. PLATES SHALL BE PLACED FLUSH WITH EXISTING ASPHALT OR SO AS TO CREATE A SMOOTH DRIVING SURFACE TO THE SATISFACTION OF THE RESIDENT ENGINEER.
6. PRIVATE PROPERTY AND EMERGENCY ACCESS SHALL BE MAINTAINED AT ALL TIMES EXCEPT AS PERMITTED BY RESIDENT ENGINEER.
7. MINIMUM LANE WIDTH TO BE 12 FEET OR AS DIRECTED BY THE RESIDENT ENGINEER.
8. ADDITIONAL "STOP" SIGNS MAY BE NEEDED IF EQUIPMENT/WORKERS ARE BLOCKING THEM FROM VIEW.
9. CONTRACTOR SHALL POST TEMPORARY "NO-PARKING" SIGNS ALONG THE SIDE OF THE STREET TO BE AFFECTED BY THIS TRAFFIC CONTROL PLAN AT LEAST 48 HOURS PRIOR TO COMMENCEMENT OF CONSTRUCTION ACTIVITIES.
10. CONTRACTOR SHALL MAINTAIN ACCESS TO RESIDENTIAL DRIVEWAYS WITHIN CONSTRUCTION WORK AREA AT ALL TIMES.

CONSTRUCTION DRAWING SET DATED 22 JUNE, 2021

FOR BIDDING PURPOSES ONLY

LINSCOTT, LAW & GREENSPAN, ENGINEERS
TRANSPORTATION PLANNING · TRAFFIC ENGINEERING · PARKING
600 South Lake Avenue, Suite 500 Pasadena, CA 91106 (626) 796-2322
2 Executive Circle, Suite 250 Irvine, CA 92614 (949) 825-6175
4542 Ruffner Street, Suite 100, San Diego, CA 92111 (858) 300-8800

K&A Engineering, Inc.
ENGINEERING
LAND PLANNING
SURVEYING
357 N SHERIDAN STREET
SUITE 117
CORONA, CALIFORNIA 92880
TEL. (951) 279-1800
FAX (951) 279-4380

ENGINEER R.C.E. 28949 DATE 4/20/2020

REGISTERED PROFESSIONAL ENGINEER — DONALD W. BERGH — No. 28949 — CIVIL — STATE OF CALIFORNIA

COUNTY OF RIVERSIDE
TRANSPORTATION DEPARTMENT
REC'MD. COUNTY OVERSIGHT ENGINEER 8/11/21
APPROVES AS TO COMPLIANCE WITH APPLICABLE COUNTY STANDARDS AND PRACTICES
REGISTRATION # 76450 DATE SIGNED

Don't Dig...Until You Call U.S.A. Toll Free
DIAL 811
for the location of buried utility lines.
Don't disrupt vital services.
TWO WORKING DAYS BEFORE YOU DIG

BENCH MARK
NAD 83 - COH 88 CCS83, ZONE 6
RCFC Z 15502
SET MAG NAIL W/ RCFC WCD TAG FLUSH
E 6,226,565.52 N 2,177,350.50
DATED: 2011 ELEV.: 1,401.46

REF	DESCRIPTION	APPR	DATE
	REVISIONS		

RIVERSIDE COUNTY FLOOD CONTROL AND WATER CONSERVATION DISTRICT

DESIGNED BY: K&A ENGINEERING
DRAWN BY: ADA
DATE DRAWN: JUNE 2021
P8 NUMBER: 226078

RECOMMENDED FOR APPROVAL BY: DATE 7-27-2021
APPROVED BY: DATE 8/4/2021

LAKELAND VILLAGE
LINE H
TRAFFIC HANDLING PLAN

STREET CLOSURE PLAN

PROJECT NO. 3-0-00020
DRAWING NO. 3-0207
SHEET NO. TH19 of TH25

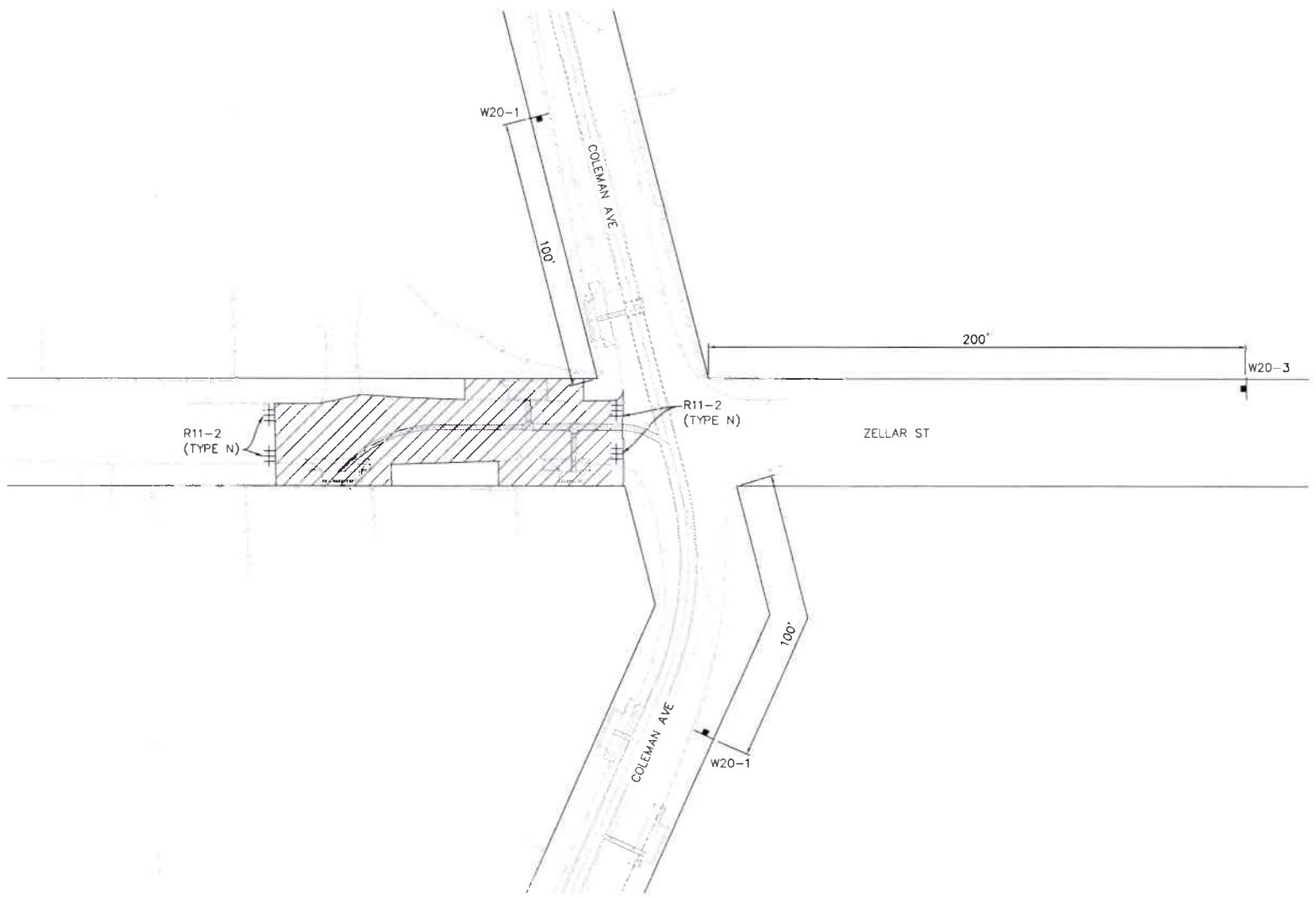

N

ZELLAR STREET ROAD CLOSURE

LEGEND

- CONE
- FLAGGER
- CONSTRUCTION SIGNS
- TYPE 3 BARRICADE
- K-RAIL (CONCRETE BARRICADE)
- CONSTRUCTION AREA

TRAFFIC CONTROL SIGN LEGEND

R11-2	ROAD CLOSED
W20-1	ROAD WORK AHEAD
W20-3	ROAD CLOSED AHEAD

RIVERSIDE COUNTY FLOOD CONTROL AND WATER CONSERVATION DISTRICT (RCFC & WCD) GENERAL TRAFFIC CONTROL NOTES:

1. THESE ARE THE MINIMUM TRAFFIC CONTROL REQUIREMENTS. ADDITIONAL TRAFFIC CONTROL MAY BE REQUIRED TO FACILITATE PUBLIC SAFETY AND TRAFFIC FLOW IF DEEMED NECESSARY BY THE ENGINEER OR RIVERSIDE COUNTY TRANSPORTATION DEPARTMENT.
2. ALL TRAFFIC CONTROL DEVICES SHALL CONFORM TO THE FHWA'S MANUAL ON UNIFORM TRAFFIC CONTROL DEVICES (MUTCD) 2014 AND THE MUTCD 2014 (REV 3) CALIFORNIA SUPPLEMENT, LATEST ADDITION AND WITH ALL OTHER APPLICABLE FEDERAL, STATE AND LOCAL LAWS.
3. SPECIAL CONSTRUCTION SIGNS SHALL BE MANUFACTURED USING MINIMUM 3" UPPER CASE BLACK LETTERS AND A BLACK BORDER ON AN ORANGE REFLECTIVE BACKGROUND.
4. FLASHING YELLOW BEACONS, TYPE B, SHALL ILLUMINATE ALL W20 SIGNS AND TYPE III BARRICADES USED AT THE WORK AREA DURING HOURS OF DARKNESS.
5. ALL TRENCHES SHALL BE BACK FILLED OR PLATED AT THE END OF EACH WORK DAY. PLATES SHALL BE PLACED FLUSH WITH EXISTING ASPHALT OR SO AS TO CREATE A SMOOTH DRIVING SURFACE TO THE SATISFACTION OF THE RESIDENT ENGINEER.
6. PRIVATE PROPERTY AND EMERGENCY ACCESS SHALL BE MAINTAINED AT ALL TIMES EXCEPT AS PERMITTED BY RESIDENT ENGINEER
7. MINIMUM LANE WIDTH TO BE 12 FEET OR AS DIRECTED BY THE RESIDENT ENGINEER.
8. ADDITIONAL "STOP" SIGNS MAY BE NEEDED IF EQUIPMENT/WORKERS ARE BLOCKING THEM FROM VIEW.
9. CONTRACTOR SHALL POST TEMPORARY "NO-PARKING" SIGNS ALONG THE SIDE OF THE STREET TO BE AFFECTED BY THIS TRAFFIC CONTROL PLAN AT LEAST 48 HOURS PRIOR TO COMMENCEMENT OF CONSTRUCTION ACTIVITIES.
10. CONTRACTOR SHALL MAINTAIN ACCESS TO RESIDENTIAL DRIVEWAYS WITHIN CONSTRUCTION WORK AREA AT ALL TIMES

CONSTRUCTION DRAWING SET DATED 22 JUNE, 2021

FOR BIDDING PURPOSES ONLY

LINSCOTT, LAW & GREENSPAN, ENGINEERS
TRANSPORTATION PLANNING • TRAFFIC ENGINEERING • PARKING
600 South Lake Avenue, Suite 500 Pasadena, Ca 91106 (626) 796-2322
2 Executive Circle, Suite 250 Irvine, CA 92614 (949) 825-6175
4542 Ruffner Street, Suite 100, San Diego, Ca 92111 (858) 300-8800

K&A Engineering, Inc.
ENGINEERING
LAND PLANNING
SURVEYING
357 N. SHERIDAN STREET
SUITE 117
CORONA, CALIFORNIA 92880
TEL. (951) 279-1800
FAX (951) 279-4380

Donald Berk 4/20/2020
ENGINEER R.C.E. 28949 DATE

REGISTERED PROFESSIONAL ENGINEER DONALD W. BERK No 28949 CIVIL STATE OF CALIFORNIA

COUNTY OF RIVERSIDE
TRANSPORTATION DEPARTMENT
REC'MD COUNTY OVERSIGHT ENGINEER 8/11/21
APPROVES AS TO COMPLIANCE WITH APPLICABLE COUNTY STANDARDS AND PRACTICES
REGISTRATION # 76450 DATE SIGNED

Don't Dig...Until You Call U.S.A. Toll Free
DIAL 811
for the location of buried utility lines.
Don't disrupt vital services.
TWO WORKING DAYS BEFORE YOU DIG

BENCH MARK
NAD 83 – COH 88 CCS83, ZONE 6
RCFC Z 15502
SET MAG NAIL W/ RCFC WCD TAG FLUSH
E 6,226,365.52 N 2,177,350.50
DATED: 2011 ELEV.: 1,401.46

REF	REVISIONS DESCRIPTION	APPR.	DATE

RIVERSIDE COUNTY FLOOD CONTROL AND WATER CONSERVATION DISTRICT

DESIGNED BY: K&A ENGINEERING
DRAWN BY: ADA
DATE DRAWN: JUNE 2021
PB NUMBER: 226078

RECOMMENDED FOR APPROVAL BY: DATE 7-27-2021
APPROVED BY: DATE 8/4/2021

LAKELAND VILLAGE
LINE H
TRAFFIC HANDLING PLAN
STREET CLOSURE PLAN

PROJECT NO. 3-0-00020
DRAWING NO. 3-0207
SHEET NO. TH20 OF TH25

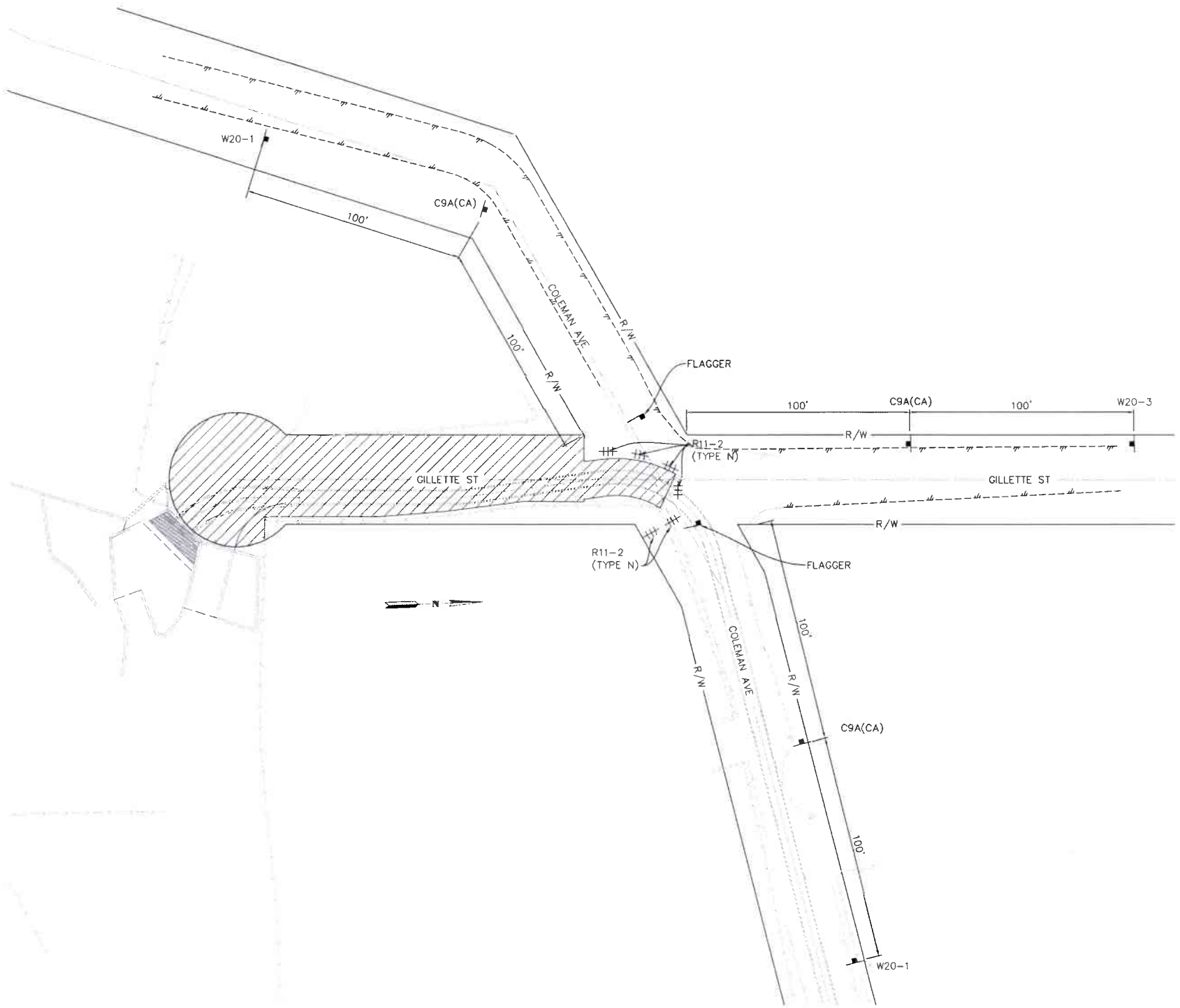

GILLETTE STREET ROAD CLOSURE

LEGEND

- CONE
- FLAGGER
- CONSTRUCTION SIGNS
- TYPE 3 BARRICADE
- K-RAIL (CONCRETE BARRICADE)
- CONSTRUCTION AREA

TRAFFIC CONTROL SIGN LEGEND

C9A(CA)	FLAG MAN PICTURE
R11-2	ROAD CLOSED
W20-1	ROAD WORK AHEAD
W20-3	ROAD CLOSED AHEAD

RIVERSIDE COUNTY FLOOD CONTROL AND WATER CONSERVATION DISTRICT (RCFC & WCD) GENERAL TRAFFIC CONTROL NOTES:

1. THESE ARE THE MINIMUM TRAFFIC CONTROL REQUIREMENTS. ADDITIONAL TRAFFIC CONTROL MAY BE REQUIRED TO FACILITATE PUBLIC SAFETY AND TRAFFIC FLOW IF DEEMED NECESSARY BY THE ENGINEER OR RIVERSIDE COUNTY TRANSPORTATION DEPARTMENT.
2. ALL TRAFFIC CONTROL DEVICES SHALL CONFORM TO THE FHWA'S MANUAL ON UNIFORM TRAFFIC CONTROL DEVICES (MUTCD) 2014 AND THE MUTCD 2014 (REV 3) CALIFORNIA SUPPLEMENT, LATEST ADDITION AND WITH ALL OTHER APPLICABLE FEDERAL, STATE AND LOCAL LAWS.
3. SPECIAL CONSTRUCTION SIGNS SHALL BE MANUFACTURED USING MINIMUM 3" UPPER CASE BLACK LETTERS AND A BLACK BORDER ON AN ORANGE REFLECTIVE BACKGROUND.
4. FLASHING YELLOW BEACONS, TYPE B, SHALL ILLUMINATE ALL W20 SIGNS AND TYPE III BARRICADES USED AT THE WORK AREA DURING HOURS OF DARKNESS.
5. ALL TRENCHES SHALL BE BACK FILLED OR PLATED AT THE END OF EACH WORK DAY. PLATES SHALL BE PLACED FLUSH WITH EXISTING ASPHALT OR SO AS TO CREATE A SMOOTH DRIVING SURFACE TO THE SATISFACTION OF THE RESIDENT ENGINEER.
6. PRIVATE PROPERTY AND EMERGENCY ACCESS SHALL BE MAINTAINED AT ALL TIMES EXCEPT AS PERMITTED BY RESIDENT ENGINEER
7. MINIMUM LANE WIDTH TO BE 12 FEET OR AS DIRECTED BY THE RESIDENT ENGINEER.
8. ADDITIONAL "STOP" SIGNS MAY BE NEEDED IF EQUIPMENT/WORKERS ARE BLOCKING THEM FROM VIEW.
9. CONTRACTOR SHALL POST TEMPORARY "NO-PARKING" SIGNS ALONG THE SIDE OF THE STREET TO BE AFFECTED BY THIS TRAFFIC CONTROL PLAN AT LEAST 48 HOURS PRIOR TO COMMENCEMENT OF CONSTRUCTION ACTIVITIES.
10. CONTRACTOR SHALL MAINTAIN ACCESS TO RESIDENTIAL DRIVEWAYS WITHIN CONSTRUCTION WORK AREA AT ALL TIMES

CONSTRUCTION DRAWING SET DATED 22 JUNE, 2021

FOR BIDDING PURPOSES ONLY

LINSCOTT, LAW & GREENSPAN, ENGINEERS
TRANSPORTATION PLANNING · TRAFFIC ENGINEERING · PARKING
600 South Lake Avenue, Suite 500 Pasadena, Ca 91106 (626) 796-2322
2 Executive Circle, Suite 250 Irvine, CA 92614 (949) 826-6275
4542 Ruffner Street, Suite 186, San Diego, Ca 92111 (858) 300-8800

K&A Engineering, Inc.
ENGINEERING
LAND PLANNING
SURVEYING
357 N. SHERIDAN STREET
SUITE 117
CORONA, CALIFORNIA 92880
TEL (951) 279-1800
FAX (951) 279-4380

Donald Berg 4/20/2020
ENGINEER R.C.E. 28949 DATE:

REGISTERED PROFESSIONAL ENGINEER DONALD W. BERGH No 28949 CIVIL STATE OF CALIFORNIA

COUNTY OF RIVERSIDE
TRANSPORTATION DEPARTMENT
RECMD COUNTY OVERSIGHT ENGINEER 8/11/21
APPROVES AS TO COMPLIANCE WITH APPLICABLE COUNTY STANDARDS AND PRACTICES.
REGISTRATION # 76450 DATE SIGNED

Don't Dig Until You Call U.S.A. Toll Free
DIAL 811
for the location of buried utility lines.
Don't disrupt vital services.
TWO WORKING DAYS BEFORE YOU DIG

BENCH MARK
NAD 83 – COH 88 CCS83, ZONE 6
RCFC Z 15502
SET MAG NAIL W/ RCFC WCD TAG FLUSH
E 6,226,565.52 N 2,177,350.50
DATED: 2011 ELEV: 1,401.46

REF	DESCRIPTION	APPR	DATE
	REVISIONS		

RIVERSIDE COUNTY FLOOD CONTROL AND WATER CONSERVATION DISTRICT
DESIGNED BY: K&A ENGINEERING
DRAWN BY: ADA
DATE DRAWN: JUNE 2021
P8 NUMBER: 226078
RECOMMENDED FOR APPROVAL BY: DATE 7-27-2021
APPROVED BY: DATE 8/4/2021

LAKELAND VILLAGE
LINE H
TRAFFIC HANDLING PLAN
STREET CLOSURE PLAN

PROJECT NO. 3-0-00020
DRAWING NO. 3-0207
SHEET NO. TH21 OF TH25

NOTE: CONTRACTOR SHALL INSTALL K-RAIL SETUP TO PROHIBIT UNAUTHORIZED ACCESS TO ANY OPEN TRENCH/WORK AREA AT ALL TIMES

NOTE: THIS IS A 24 HOUR CLOSURE FOR APPROXIMATELY 2 WEEKS

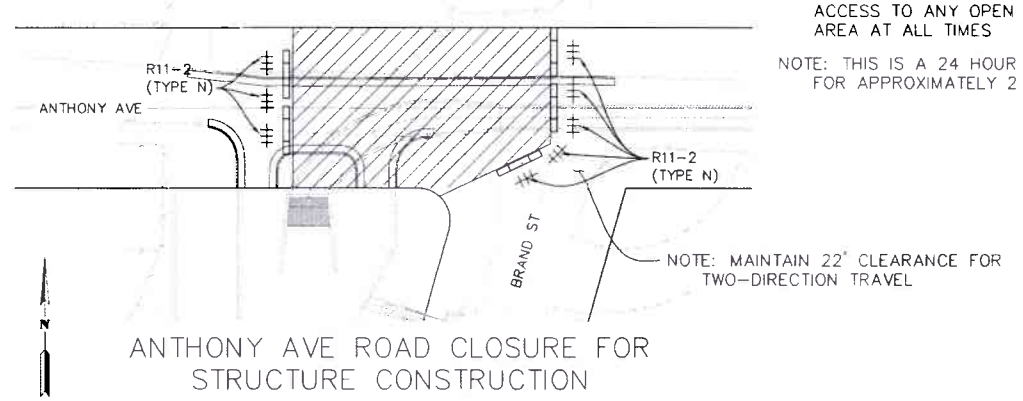

ANTHONY AVE ROAD CLOSURE FOR STRUCTURE CONSTRUCTION

REFER TO SHEET T13 FOR ADJACENT STORM DRAIN IMPROVEMENTS AND DETOUR DETAIL

LEGEND

- CONE
- FLAGGER
- CONSTRUCTION SIGNS
- TYPE 3 BARRICADE
- K-RAIL (CONCRETE BARRICADE)
- CONSTRUCTION AREA

TRAFFIC CONTROL SIGN LEGEND

M4-10	DETOUR WITH ARROW
R3-1	NO RIGHT TURN
R3-2	NO LEFT TURN
R11-2	ROAD CLOSED
R11-4	ROAD CLOSED TO THROUGH TRAFFIC
W20-1	ROAD WORK AHEAD
W20-3	ROAD CLOSED AHEAD

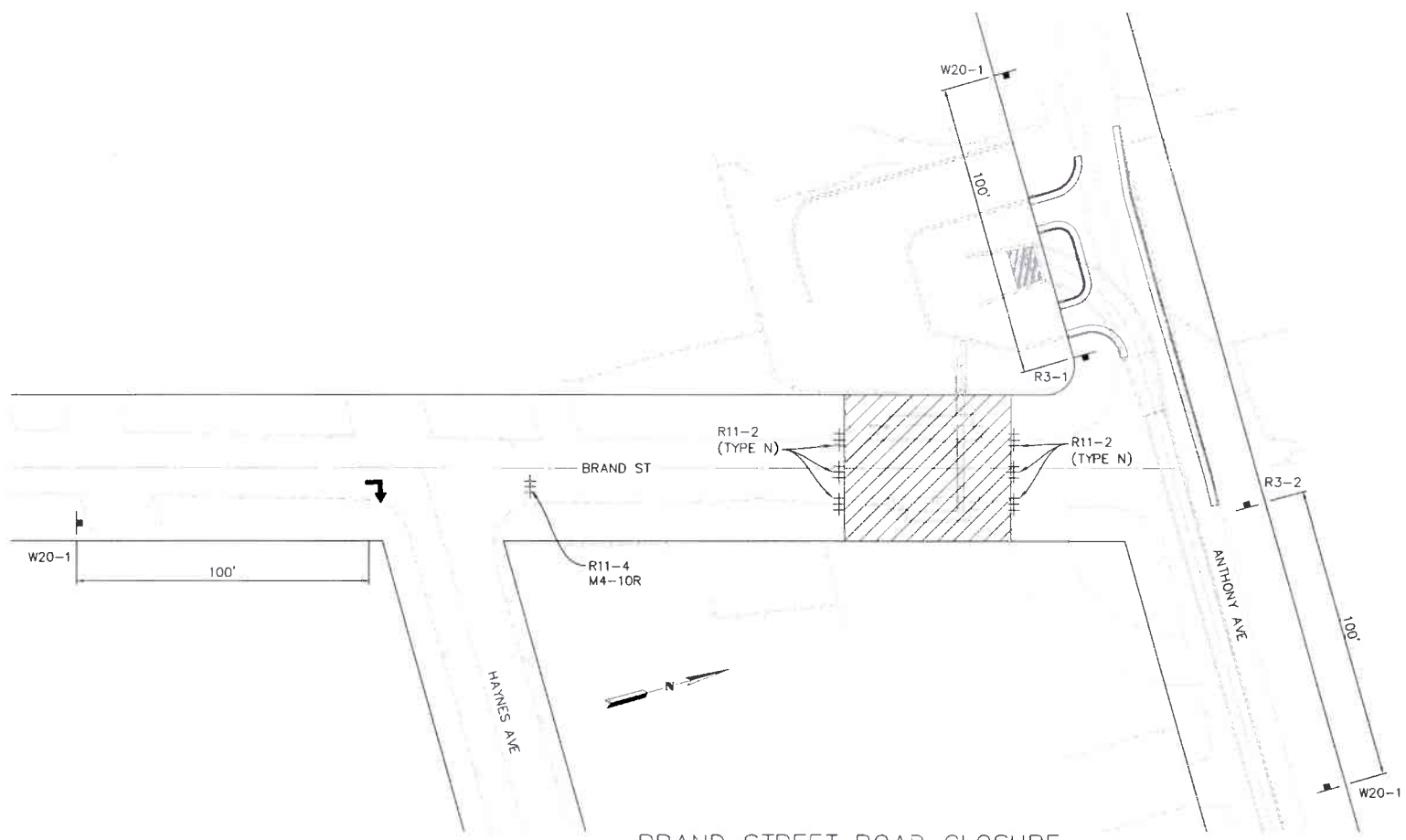

BRAND STREET ROAD CLOSURE

RIVERSIDE COUNTY FLOOD CONTROL AND WATER CONSERVATION DISTRICT (RCFC & WCD) GENERAL TRAFFIC CONTROL NOTES:

1. THESE ARE THE MINIMUM TRAFFIC CONTROL REQUIREMENTS. ADDITIONAL TRAFFIC CONTROL MAY BE REQUIRED TO FACILITATE PUBLIC SAFETY AND TRAFFIC FLOW IF DEEMED NECESSARY BY THE ENGINEER OR RIVERSIDE COUNTY TRANSPORTATION DEPARTMENT.
2. ALL TRAFFIC CONTROL DEVICES SHALL CONFORM TO THE FHWA'S MANUAL ON UNIFORM TRAFFIC CONTROL DEVICES (MUTCD) 2014 AND THE MUTCD 2014 (REV 3) CALIFORNIA SUPPLEMENT, LATEST ADDITION AND WITH ALL OTHER APPLICABLE FEDERAL, STATE AND LOCAL LAWS.
3. SPECIAL CONSTRUCTION SIGNS SHALL BE MANUFACTURED USING MINIMUM 3" UPPER CASE BLACK LETTERS AND A BLACK BORDER ON AN ORANGE REFLECTIVE BACKGROUND.
4. FLASHING YELLOW BEACONS, TYPE B, SHALL ILLUMINATE ALL W20 SIGNS AND TYPE III BARRICADES USED AT THE WORK AREA DURING HOURS OF DARKNESS.
5. ALL TRENCHES SHALL BE BACK FILLED OR PLATED AT THE END OF EACH WORK DAY. PLATES SHALL BE PLACED FLUSH WITH EXISTING ASPHALT OR SO AS TO CREATE A SMOOTH DRIVING SURFACE TO THE SATISFACTION OF THE RESIDENT ENGINEER.
6. PRIVATE PROPERTY AND EMERGENCY ACCESS SHALL BE MAINTAINED AT ALL TIMES EXCEPT AS PERMITTED BY RESIDENT ENGINEER
7. MINIMUM LANE WIDTH TO BE 12 FEET OR AS DIRECTED BY THE RESIDENT ENGINEER.
8. ADDITIONAL "STOP" SIGNS MAY BE NEEDED IF EQUIPMENT/WORKERS ARE BLOCKING THEM FROM VIEW.
9. CONTRACTOR SHALL POST TEMPORARY "NO-PARKING" SIGNS ALONG THE SIDE OF THE STREET TO BE AFFECTED BY THIS TRAFFIC CONTROL PLAN AT LEAST 48 HOURS PRIOR TO COMMENCEMENT OF CONSTRUCTION ACTIVITIES.
10. CONTRACTOR SHALL MAINTAIN ACCESS TO RESIDENTIAL DRIVEWAYS WITHIN CONSTRUCTION WORK AREA AT ALL TIMES

CONSTRUCTION DRAWING SET DATED 22 JUNE, 2021

FOR BIDDING PURPOSES ONLY

LINSCOTT, LAW & GREENSPAN, ENGINEERS
TRANSPORTATION PLANNING · TRAFFIC ENGINEERING · PARKING
600 South Lake Avenue, Suite 580 Pasadena, Ca 91106 (626) 796-2322
2 Executive Circle, Suite 250 Irvine, CA 92614 (949) 825-6175
4542 Ruffner Street, Suite 100, San Diego, Ca 92111 (858) 300-8800

K&A Engineering, Inc.
ENGINEERING
LAND PLANNING
SURVEYING
357 N. SHERIDAN STREET
SUITE 117
CORONA, CALIFORNIA 92880
TEL. (951) 279-1800
FAX (951) 279-4380

REGISTERED PROFESSIONAL ENGINEER DONALD W. BERGH No. 28949 CIVIL STATE OF CALIFORNIA

Donald Bergh 4/20/2020
ENGINEER R.C.E. 28949 DATE

COUNTY OF RIVERSIDE TRANSPORTATION DEPARTMENT
RECMD COUNTY OVERSIGHT ENGINEER 8/11/21
APPROVES AS TO COMPLIANCE WITH APPLICABLE COUNTY STANDARDS AND PRACTICES
REGISTRATION # 76450 DATE SIGNED

Don't Dig...Until You Call U.S.A. Toll Free
DIAL 811
for the location of buried utility lines.
Don't disrupt vital services.
TWO WORKING DAYS BEFORE YOU DIG

BENCH MARK
NAD 83 - COH 88 CCS83, ZONE 6
RCFC Z 15502
SET MAG NAIL W/ RCFC WCD TAG FLUSH
E 6,226,565.52 N 2,177,350.50
DATED: 2011 ELEV. 1,401.46

REF.	REVISIONS DESCRIPTION	APPR.	DATE

RIVERSIDE COUNTY FLOOD CONTROL AND WATER CONSERVATION DISTRICT

DESIGNED BY: K&A ENGINEERING
DRAWN BY: ADA
DATE DRAWN: JUNE 2021
P6 NUMBER: 226078

RECOMMENDED FOR APPROVAL BY: DATE 7-27-2021
APPROVED BY: DATE 8/4/2021

LAKELAND VILLAGE LINE H TRAFFIC HANDLING PLAN

STREET CLOSURE PLAN

PROJECT NO. 3-0-00020
DRAWING NO. 3-0207
SHEET NO. TH22 OF TH25

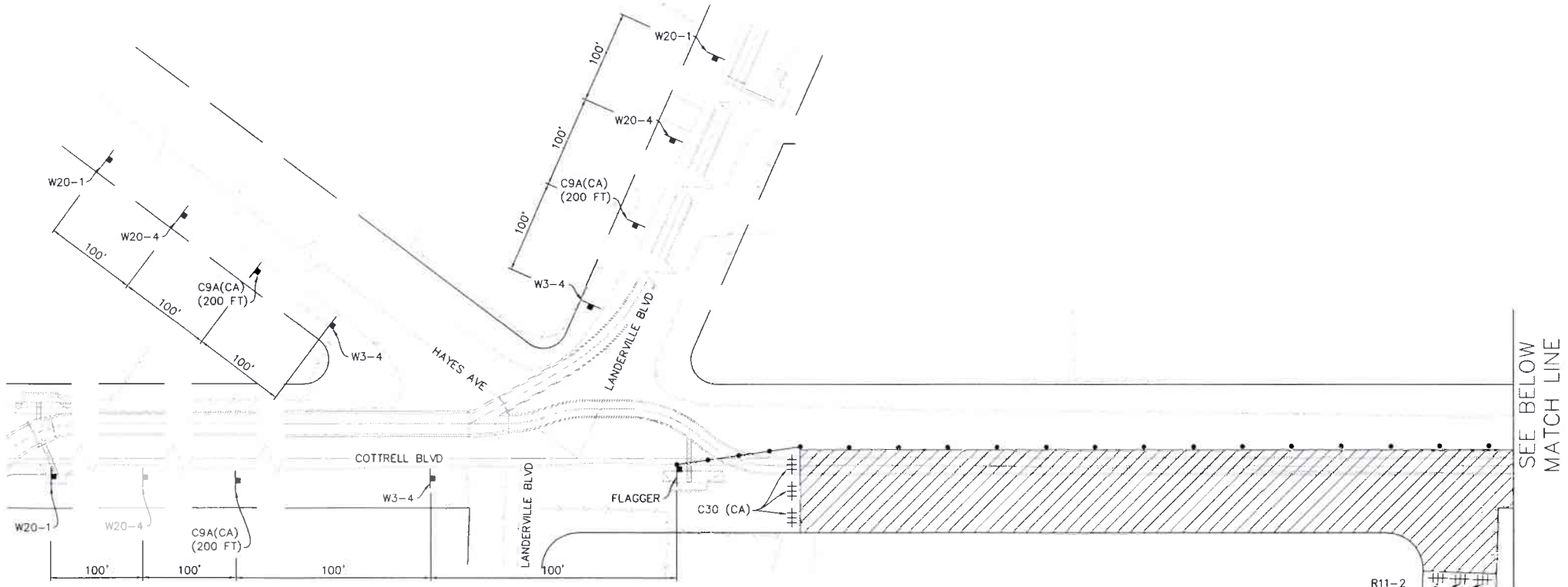

LEGEND

- CONE
- FLAGGER
- CONSTRUCTION SIGNS
- TYPE 3 BARRICADE
- K-RAIL (CONCRETE BARRICADE)
- CONSTRUCTION AREA

TRAFFIC CONTROL SIGN LEGEND

C30(CA)	LANE CLOSED AHEAD
C9A(CA)	FLAG MAN PICTURE
R11-2	ROAD CLOSED
W3-4	BE PREPARED TO STOP
W20-1	ROAD WORK AHEAD
W20-4	ONE LANE ROAD AHEAD

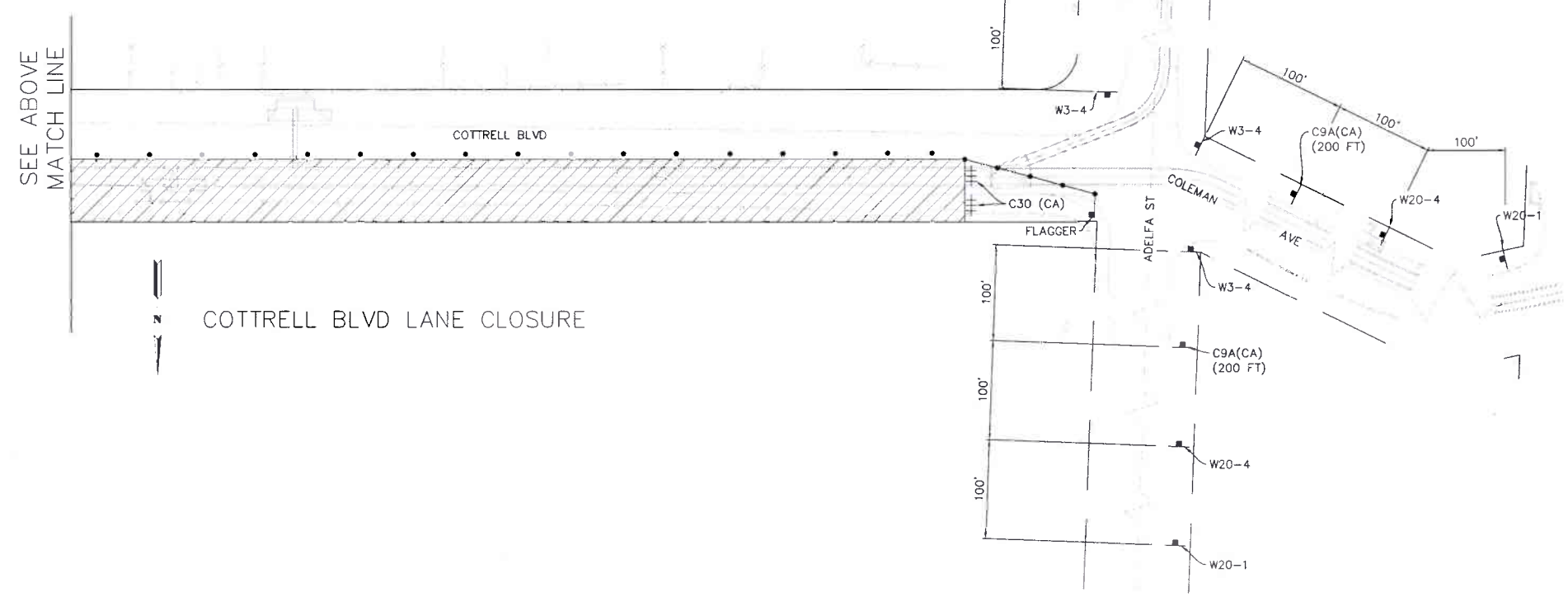

COTTRELL BLVD LANE CLOSURE

RIVERSIDE COUNTY FLOOD CONTROL AND WATER CONSERVATION DISTRICT (RCFC & WCD) GENERAL TRAFFIC CONTROL NOTES:

1. THESE ARE THE MINIMUM TRAFFIC CONTROL REQUIREMENTS. ADDITIONAL TRAFFIC CONTROL MAY BE REQUIRED TO FACILITATE PUBLIC SAFETY AND TRAFFIC FLOW IF DEEMED NECESSARY BY THE ENGINEER OR RIVERSIDE COUNTY TRANSPORTATION DEPARTMENT.
2. ALL TRAFFIC CONTROL DEVICES SHALL CONFORM TO THE FHWA'S MANUAL ON UNIFORM TRAFFIC CONTROL DEVICES (MUTCD) 2014 AND THE MUTCD 2014 (REV 3) CALIFORNIA SUPPLEMENT, LATEST ADDITION AND WITH ALL OTHER APPLICABLE FEDERAL, STATE AND LOCAL LAWS.
3. SPECIAL CONSTRUCTION SIGNS SHALL BE MANUFACTURED USING MINIMUM 3" UPPER CASE BLACK LETTERS AND A BLACK BORDER ON AN ORANGE REFLECTIVE BACKGROUND.
4. FLASHING YELLOW BEACONS, TYPE B, SHALL ILLUMINATE ALL W20 SIGNS AND TYPE III BARRICADES USED AT THE WORK AREA DURING HOURS OF DARKNESS.
5. ALL TRENCHES SHALL BE BACK FILLED OR PLATED AT THE END OF EACH WORK DAY. PLATES SHALL BE PLACED FLUSH WITH EXISTING ASPHALT OR SO AS TO CREATE A SMOOTH DRIVING SURFACE TO THE SATISFACTION OF THE RESIDENT ENGINEER.
6. PRIVATE PROPERTY AND EMERGENCY ACCESS SHALL BE MAINTAINED AT ALL TIMES EXCEPT AS PERMITTED BY RESIDENT ENGINEER
7. MINIMUM LANE WIDTH TO BE 12 FEET OR AS DIRECTED BY THE RESIDENT ENGINEER.
8. ADDITIONAL "STOP" SIGNS MAY BE NEEDED IF EQUIPMENT/WORKERS ARE BLOCKING THEM FROM VIEW.
9. CONTRACTOR SHALL POST TEMPORARY "NO-PARKING" SIGNS ALONG THE SIDE OF THE STREET TO BE AFFECTED BY THIS TRAFFIC CONTROL PLAN AT LEAST 48 HOURS PRIOR TO COMMENCEMENT OF CONSTRUCTION ACTIVITIES.
10. CONTRACTOR SHALL MAINTAIN ACCESS TO RESIDENTIAL DRIVEWAYS WITHIN CONSTRUCTION WORK AREA AT ALL TIMES

LINSCOTT, LAW & GREENSPAN, ENGINEERS
TRANSPORTATION PLANNING · TRAFFIC ENGINEERING · PARKING
600 South Lake Avenue, Suite 500 Pasadena, Ca 91106 (626) 796-2322
2 Executive Circle, Suite 250 Irvine, CA 92614 (949) 825-6175
4542 Ruffner Street, Suite 100, San Diego, Ca 92111 (858) 300-8800

K&A Engineering, Inc.
ENGINEERING · LAND PLANNING · SURVEYING
357 N. SHERIDAN STREET
SUITE 117
CORONA, CALIFORNIA 92880
TEL. (951) 279-1800
FAX (951) 279-4380

REGISTERED PROFESSIONAL ENGINEER DONALD W. BERGER No. 28949 CIVIL STATE OF CALIFORNIA

Donald Berger 4/20/2020
ENGINEER R.C.E. 28949 DATE

COUNTY OF RIVERSIDE
TRANSPORTATION DEPARTMENT
RECMD: COUNTY OVERSIGHT ENGINEER 8/11/21
APPROVES AS TO COMPLIANCE WITH APPLICABLE COUNTY STANDARDS AND PRACTICES
REGISTRATION # 76450 DATE SIGNED

Don't Dig...Until You Call U.S.A. Toll Free DIAL 811 for the location of buried utility lines. Don't disrupt vital services.
TWO WORKING DAYS BEFORE YOU DIG

BENCH MARK
NAD 83 – COH 88 CCS83, ZONE 6
RCFC Z 15502
SET MAG NAIL W/ RCFC WCD TAG FLUSH
E 6,226,565.52 N 2,177,350.50
DATED: 2011 ELEV: 1,401.40

REF	REVISIONS DESCRIPTION	APPR	DATE

RIVERSIDE COUNTY FLOOD CONTROL AND WATER CONSERVATION DISTRICT

DESIGNED BY K&A ENGINEERING
DRAWN BY: ADA
DATE DRAWN: JUNE 2021
P8 NUMBER: 226078

RECOMMENDED FOR APPROVAL BY: DATE 7-27-2021
APPROVED BY: DATE 8/4/2021

FOR BIDDING PURPOSES ONLY

LAKELAND VILLAGE LINE H TRAFFIC HANDLING PLAN

LANE CLOSURE PLAN

PROJECT NO 3-0-00020
DRAWING NO 3-0207
SHEET NO. TH23 OF TH25

CONSTRUCTION DRAWING SET DATED 22 JUNE, 2021

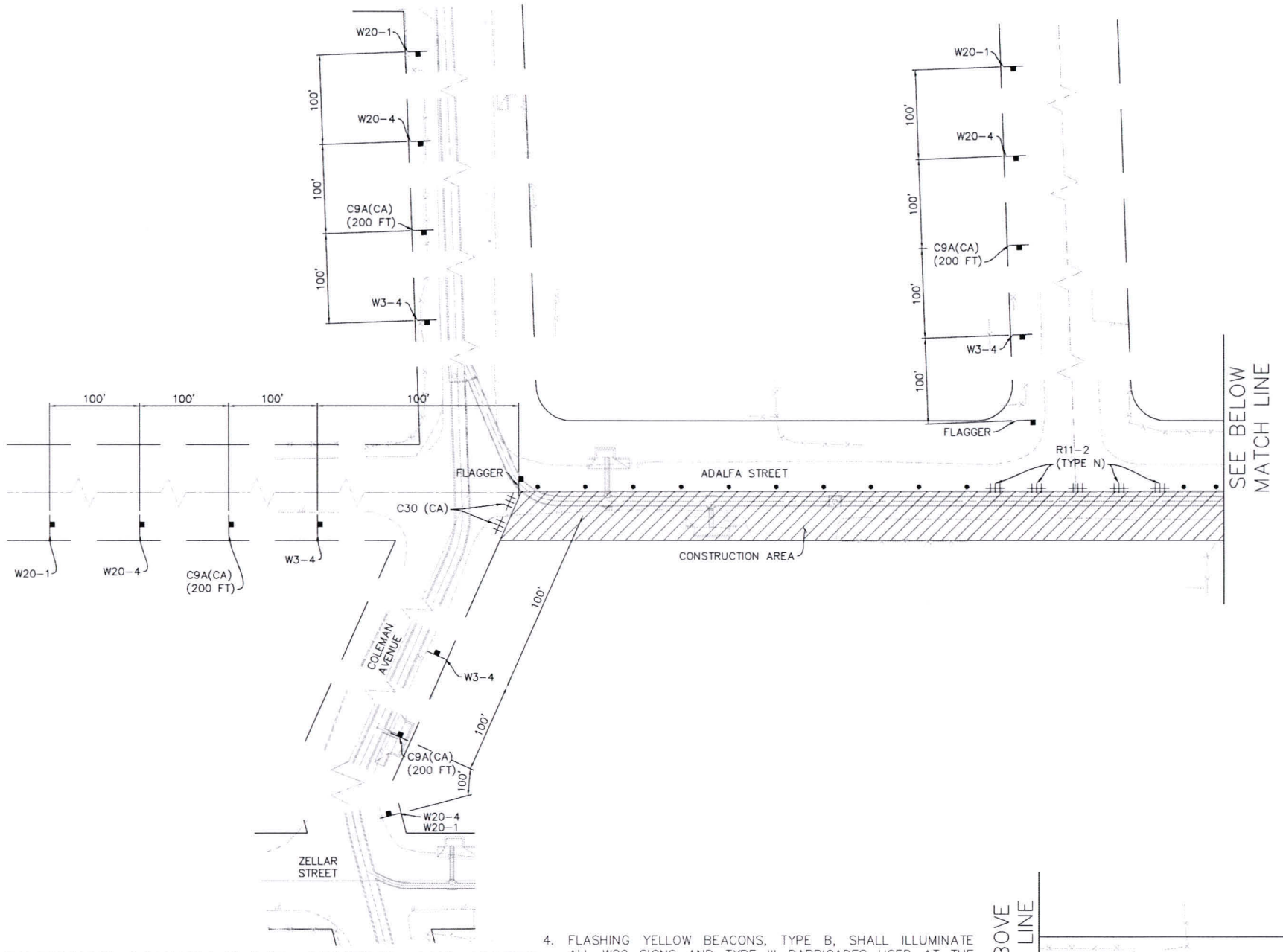

LEGEND

- CONE
- FLAGGER
- CONSTRUCTION SIGNS
- TYPE 3 BARRICADE
- K-RAIL (CONCRETE BARRICADE)
- CONSTRUCTION AREA

TRAFFIC CONTROL SIGN LEGEND

C30(CA)	LANE CLOSED AHEAD
C9A(CA)	FLAG MAN PICTURE
R11-2	ROAD CLOSED
W3-4	BE PREPARED TO STOP
W20-1	ROAD WORK AHEAD
W20-4	ONE LANE ROAD AHEAD

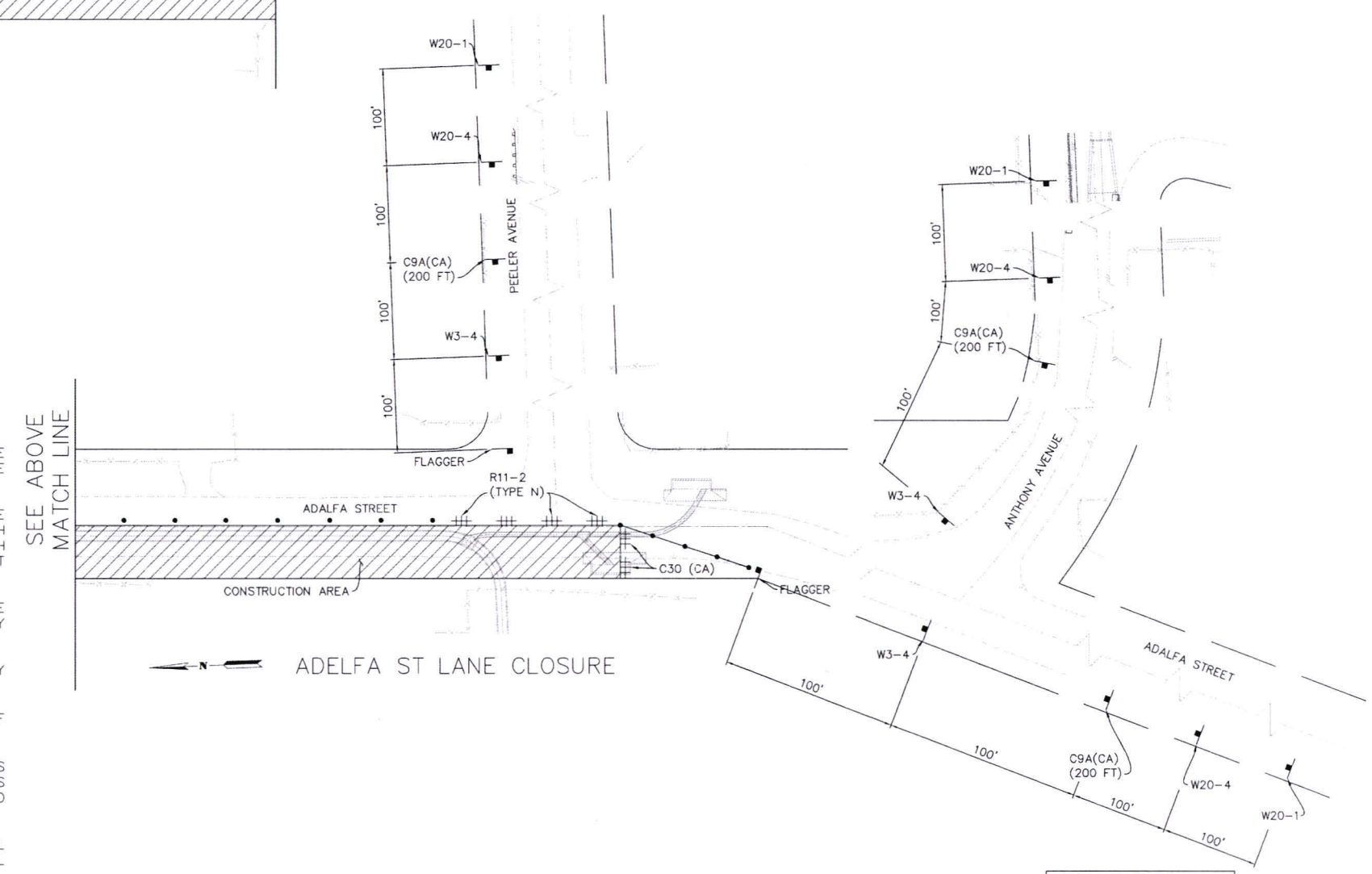

ADELFA ST LANE CLOSURE

RIVERSIDE COUNTY FLOOD CONTROL AND WATER CONSERVATION DISTRICT (RCFC & WCD) GENERAL TRAFFIC CONTROL NOTES:

1. THESE ARE THE MINIMUM TRAFFIC CONTROL REQUIREMENTS. ADDITIONAL TRAFFIC CONTROL MAY BE REQUIRED TO FACILITATE PUBLIC SAFETY AND TRAFFIC FLOW IF DEEMED NECESSARY BY THE ENGINEER OR RIVERSIDE COUNTY TRANSPORTATION DEPARTMENT.
2. ALL TRAFFIC CONTROL DEVICES SHALL CONFORM TO THE FHWA'S MANUAL ON UNIFORM TRAFFIC CONTROL DEVICES (MUTCD) 2014 AND THE MUTCD 2014 (REV 3) CALIFORNIA SUPPLEMENT, LATEST ADDITION AND WITH ALL OTHER APPLICABLE FEDERAL, STATE AND LOCAL LAWS.
3. SPECIAL CONSTRUCTION SIGNS SHALL BE MANUFACTURED USING MINIMUM 3" UPPER CASE BLACK LETTERS AND A BLACK BORDER ON AN ORANGE REFLECTIVE BACKGROUND.
4. FLASHING YELLOW BEACONS, TYPE B, SHALL ILLUMINATE ALL W20 SIGNS AND TYPE III BARRICADES USED AT THE WORK AREA DURING HOURS OF DARKNESS.
5. ALL TRENCHES SHALL BE BACK FILLED OR PLATED AT THE END OF EACH WORK DAY. PLATES SHALL BE PLACED FLUSH WITH EXISTING ASPHALT OR SO AS TO CREATE A SMOOTH DRIVING SURFACE TO THE SATISFACTION OF THE RESIDENT ENGINEER.
6. PRIVATE PROPERTY AND EMERGENCY ACCESS SHALL BE MAINTAINED AT ALL TIMES EXCEPT AS PERMITTED BY RESIDENT ENGINEER
7. MINIMUM LANE WIDTH TO BE 12 FEET OR AS DIRECTED BY THE RESIDENT ENGINEER.
8. ADDITIONAL "STOP" SIGNS MAY BE NEEDED IF EQUIPMENT/WORKERS ARE BLOCKING THEM FROM VIEW.
9. CONTRACTOR SHALL POST TEMPORARY "NO-PARKING" SIGNS ALONG THE SIDE OF THE STREET TO BE AFFECTED BY THIS TRAFFIC CONTROL PLAN AT LEAST 48 HOURS PRIOR TO COMMENCEMENT OF CONSTRUCTION ACTIVITIES.
10. CONTRACTOR SHALL MAINTAIN ACCESS TO RESIDENTIAL DRIVEWAYS WITHIN CONSTRUCTION WORK AREA AT ALL TIMES

LINSCOTT, LAW & GREENSPAN, ENGINEERS
TRANSPORTATION PLANNING · TRAFFIC ENGINEERING · PARKING
600 South Lake Avenue, Suite 500 Pasadena, Ca 91106 (626) 796-2322
2 Executive Circle, Suite 250 Irvine, CA 92614 (949) 825-6175
4542 Ruffner Street, Suite 100, San Diego, Ca 92111 (858) 300-8800

K&A Engineering, Inc.
ENGINEERING / LAND PLANNING / SURVEYING
357 N. SHERIDAN STREET
SUITE 117
CORONA, CALIFORNIA 92880
TEL. (951) 279-1800
FAX (951) 279-4380

REGISTERED PROFESSIONAL ENGINEER DONALD W. BERGH No. 28949 CIVIL STATE OF CALIFORNIA

Donald Bergh 4/20/2020
ENGINEER R.C.E. 28949 DATE:

COUNTY OF RIVERSIDE
TRANSPORTATION DEPARTMENT
RECMD COUNTY OVERSIGHT ENGINEER 8/11/21
APPROVES AS TO COMPLIANCE WITH APPLICABLE COUNTY STANDARDS AND PRACTICES.
REGISTRATION # 76450 DATE SIGNED

Don't Dig...Until You Call U.S.A. Toll Free
DIAL 811
for the location of buried utility lines.
Don't disrupt vital services.
TWO WORKING DAYS BEFORE YOU DIG

BENCH MARK
NAD 83 - COH 88 CCS83, ZONE 6
RCFC Z 15502
SET MAG NAIL W/ RCFC WCD TAG FLUSH
E 6,226,565.52 N 2,177,350.50
DATED: 2011 ELEV.: 1,401.46

REF.	REVISIONS	APPR.	DATE

RIVERSIDE COUNTY FLOOD CONTROL AND WATER CONSERVATION DISTRICT

DESIGNED BY: K&A ENGINEERING
DRAWN BY: ADA
DATE DRAWN: JUNE 2021
P8 NUMBER: 226078

RECOMMENDED FOR APPROVAL BY: DATE 7-27-2021
APPROVED BY: DATE 8/4/2021

LAKELAND VILLAGE LINE H
TRAFFIC HANDLING PLAN
LANE CLOSURE PLAN

PROJECT NO. 3-0-00020
DRAWING NO. 3-0207
SHEET NO. TH24 OF TH25

FOR BIDDING PURPOSES ONLY

CONSTRUCTION DRAWING SET DATED 22 JUNE, 2021

TYPICAL LANE CLOSURE FOR CATCH BASIN CONSTRUCTION

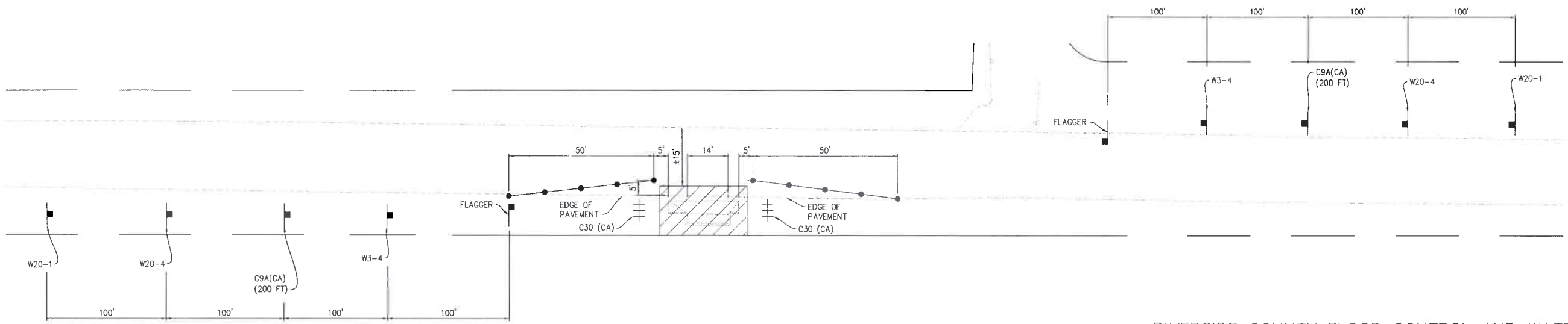

LEGEND

- CONE
- FLAGGER
- CONSTRUCTION SIGNS
- TYPE 3 BARRICADE
- K-RAIL (CONCRETE BARRICADE)
- CONSTRUCTION AREA

TRAFFIC CONTROL SIGN LEGEND

C30(CA)	LANE CLOSED AHEAD
C9A(CA)	FLAG MAN PICTURE
W3-4	BE PREPARED TO STOP
W20-1	ROAD WORK AHEAD
W20-4	ONE LANE ROAD AHEAD

RIVERSIDE COUNTY FLOOD CONTROL AND WATER CONSERVATION DISTRICT (RCFC & WCD) GENERAL TRAFFIC CONTROL NOTES:

1. THESE ARE THE MINIMUM TRAFFIC CONTROL REQUIREMENTS. ADDITIONAL TRAFFIC CONTROL MAY BE REQUIRED TO FACILITATE PUBLIC SAFETY AND TRAFFIC FLOW IF DEEMED NECESSARY BY THE ENGINEER OR RIVERSIDE COUNTY TRANSPORTATION DEPARTMENT.
2. ALL TRAFFIC CONTROL DEVICES SHALL CONFORM TO THE FHWA'S MANUAL ON UNIFORM TRAFFIC CONTROL DEVICES (MUTCD) 2014 AND THE MUTCD 2014 (REV 3) CALIFORNIA SUPPLEMENT, LATEST ADDITION AND WITH ALL OTHER APPLICABLE FEDERAL, STATE AND LOCAL LAWS.
3. SPECIAL CONSTRUCTION SIGNS SHALL BE MANUFACTURED USING MINIMUM 3" UPPER CASE BLACK LETTERS AND A BLACK BORDER ON AN ORANGE REFLECTIVE BACKGROUND.
4. FLASHING YELLOW BEACONS, TYPE B, SHALL ILLUMINATE ALL W20 SIGNS AND TYPE III BARRICADES USED AT THE WORK AREA DURING HOURS OF DARKNESS.
5. ALL TRENCHES SHALL BE BACK FILLED OR PLATED AT THE END OF EACH WORK DAY. PLATES SHALL BE PLACED FLUSH WITH EXISTING ASPHALT OR SO AS TO CREATE A SMOOTH DRIVING SURFACE TO THE SATISFACTION OF THE RESIDENT ENGINEER.
6. PRIVATE PROPERTY AND EMERGENCY ACCESS SHALL BE MAINTAINED AT ALL TIMES EXCEPT AS PERMITTED BY RESIDENT ENGINEER
7. MINIMUM LANE WIDTH TO BE 12 FEET OR AS DIRECTED BY THE RESIDENT ENGINEER.
8. ADDITIONAL "STOP" SIGNS MAY BE NEEDED IF EQUIPMENT/WORKERS ARE BLOCKING THEM FROM VIEW.
9. CONTRACTOR SHALL POST TEMPORARY "NO-PARKING" SIGNS ALONG THE SIDE OF THE STREET TO BE AFFECTED BY THIS TRAFFIC CONTROL PLAN AT LEAST 48 HOURS PRIOR TO COMMENCEMENT OF CONSTRUCTION ACTIVITIES.
10. CONTRACTOR SHALL MAINTAIN ACCESS TO RESIDENTIAL DRIVEWAYS WITHIN CONSTRUCTION WORK AREA AT ALL TIMES

CONSTRUCTION DRAWING SET DATED 22 JUNE, 2021

FOR BIDDING PURPOSES ONLY

LINSCOTT, LAW & GREENSPAN, ENGINEERS
TRANSPORTATION PLANNING · TRAFFIC ENGINEERING · PARKING
600 South Lake Avenue, Suite 580 Pasadena, Ca 91106 (626) 796-2322
2 Executive Circle, Suite 250 Irvine, CA 92614 (949) 825-6175
4542 Ruffner Street, Suite 100, San Diego, Ca 92111 (858) 300-8800

K&A Engineering, Inc.
ENGINEERING
LAND PLANNING
SURVEYING
357 N. SHERIDAN STREET
SUITE 117
CORONA, CALIFORNIA 92880
TEL (951) 279-1800
FAX (951) 279-4380

Donald Berg 4/20/2020
ENGINEER R.C.E. 28949 DATE

REGISTERED PROFESSIONAL ENGINEER DONALD W. BERG No. 28949 CIVIL STATE OF CALIFORNIA

COUNTY OF RIVERSIDE
TRANSPORTATION DEPARTMENT
REQMD COUNTY OVERSIGHT ENGINEER 8/11/21
APPROVES AS TO COMPLIANCE WITH APPLICABLE COUNTY STANDARDS AND PRACTICES
REGISTRATION # 76450 DATE SIGNED

Don't Dig...Until You Call U.S.A. Toll Free
DIAL 811
for the location of buried utility lines.
Don't disrupt vital services.
BURIED CABLE
TWO WORKING DAYS BEFORE YOU DIG

BENCH MARK
NAD 83 - COH 88 CCS83, ZONE 6
RCFC Z 15502
SET MAG NAIL W/ RCFC WCD TAG FLUSH
E 6,226,565.52 N 2,177,350.50
DATED: 2011 ELEV: 1,401.46

REF.	DESCRIPTION	APPR.	DATE
	REVISIONS		

RIVERSIDE COUNTY FLOOD CONTROL AND WATER CONSERVATION DISTRICT

DESIGNED BY: K&A ENGINEERING
DRAWN BY: ADA
DATE DRAWN: JUNE 2021
PB NUMBER: 226078

RECOMMENDED FOR APPROVAL BY: DATE 7-27-2021
APPROVED BY: DATE 8/4/2021

LAKELAND VILLAGE
LINE H
TRAFFIC HANDLING PLAN
TYPICAL LANE CLOSURE FOR
CATCH BASIN CONSTRUCTION

PROJECT NO. 3-0-00020
DRAWING NO. 3-0207
SHEET NO. TH25 OF TH25