SUBMITTAL TO THE BOARD OF SUPERVISORS
COUNTY OF RIVERSIDE, STATE OF CALIFORNIA

ITEM: 3.28
(ID # 18792)
MEETING DATE:
Tuesday, May 10, 2022

FROM : TLMA-TRANSPORTATION:

SUBJECT: TRANSPORTATION AND LAND MANAGEMENT AGENCY/TRANSPORTATION: Approve Addendum to Plans and Specifications, Accept the Low Bid and Award the Contract for the Construction of the El Toro Road / Dexter Avenue Sidewalk Project, Carmela Court to 680-Feet North of Central Avenue, Community of Warm Springs; District 1. [$1,505,090 Total Cost - State Funds 100%]

RECOMMENDED MOTION: That the Board of Supervisors:

1. Approve one addendum to the plans and specifications issued prior to the February 16, 2022 bid opening;
2. Waive any and all immaterial bid irregularities and accept the low bid of S&H Civilworks of Colton, California in the amount of $1,505,090;
3. Award the contract to S&H Civilworks and authorize the Chair of the Board to execute the contract documents; and
4. Approve the project proposed budget as shown on Attachment "A".

ACTION:

Mark Lancaster, Director of Transportation 4/14/2022

MINUTES OF THE BOARD OF SUPERVISORS

On motion of Supervisor Washington seconded by Supervisor Jeffries and duly carried by unanimous vote, IT WAS ORDERED that the above matter is approved as recommended.

Ayes:	Jeffries, Spiegel, Washington, Perez, and Hewitt
Nays:	None
Absent:	None
Date:	May 10, 2022
xc:	Trans.

Kecia R. Harper
Clerk of the Board
By: _____
Deputy

SUBMITTAL TO THE BOARD OF SUPERVISORS COUNTY OF RIVERSIDE, STATE OF CALIFORNIA

FINANCIAL DATA	Current Fiscal Year:	Next Fiscal Year:	Total Cost:	Ongoing Cost
COST	$ 500,000	$ 1,005,090	$ 1,505,090	$ 0
NET COUNTY COST	$ 0	$ 0	$ 0	$ 0

SOURCE OF FUNDS: Active Transportation Plan (ATP) – State (100%). There are no General Funds used in this project.	**Budget Adjustment:** No
	For Fiscal Year: 21/22, 22/23

C.E.O. RECOMMENDATION: Approve

BACKGROUND:

Summary

By Minute Order dated January 25, 2022 (Agenda Item 3.60), the County of Riverside (County) Board of Supervisors authorized the Clerk of the Board to advertise for the construction of the El Toro Road / Dexter Avenue Sidewalk Project between Carmela Court and approximately 1/8 miles north of Central Avenue in the North Elsinore/Warm Springs Community of Riverside County and the City of Lake Elsinore.

The project proposes to construct approximately 1-mile of new sidewalk on the east side of El Toro Road and on both sides of Dexter Avenue. El Toro Road is a two-lane road traveling in the north-south direction with curb, gutter, and sidewalk on the south bound side, and AC dike on the north bound side. At approximately 750-feet south of Carmela Court, El Toro Road alignment changes to northwest-southeast direction and it becomes Dexter Avenue.

The proposed project will provide a safer pedestrian route to travel to and from Temescal Valley High School.

The scope of work includes roadway resurfacing due to the deteriorated pavement conditions. The pavement rehabilitation method consists of grinding down a portion of the roadway with an overlay of Rubberized Hot Mix Asphalt (RHMA) being placed throughout the project limits.

Additional improvements include construction of Americans with Disabilities Act (ADA) compliant concrete access ramps, concrete cross gutter, and residential concrete driveway approaches, placing of traffic striping, thermoplastic crosswalks and pavement markings, roadside signs, installation of solar powered flashing beacons with push-button signal actuators to enhance pedestrian conspicuity and increase driver awareness at the marked crosswalks intersections of El Toro Road and Carmela Court, and Dexter Avenue and 11th Street, and other associated work.

During the advertisement period one addendum was issued to all registered plan holders as a supplement to the plans and specifications. Bidders were required to acknowledge and take

into account the issued addendum on their contractor's Bid in order to be considered for award. The addendum is attached herewith and designated as Addendum No. 1.

The contract includes the following schedule of work:

Base Bid Schedule: El Toro Road / Dexter Avenue Sidewalk Improvements

The contractor, S&H Civilworks, is qualified to perform the work as outlined in the bid, has executed the contract, and has provided bonds and insurance documents which meet the requirements of the contract documents.

Project No. D0-0014
State Project No. ATPSB1L-5956(275)

Impact on Residents and Businesses

The proposed improvements will improve the pedestrian path and provide an Americans with Disabilities Act (ADA) compliant path. The new sidewalk will serve as a path to and from Temescal Valley High School located on El Toro Road.

The work is scheduled to begin in early summer 2022. The work will be phased to keep the road open during construction as much as possible and will take approximately three months to complete.

SUPPLEMENTAL:

Additional Fiscal Information

Construction is expected to be completed in FY 2022/23 and will be funded with Active Transportation Plan (ATP) – State funds.

The ATP funds were secured through a Countywide process in which the Transportation Department successfully competed.

The proposed budget as shown on Attachment "A" includes Contract award amount and other associated costs.

There are no General Funds used in this project.

Contract History and Price Reasonableness

Eight bids were received on Wednesday February 16, 2022 ranging from $1,505,090 to $2,610,000. The basis for the selection of a contractor is the lowest responsive and responsible bid. The lowest responsive and responsible bid was submitted by S&H Civilworks in the amount of $1,505,090 which is $112,356 (8%) below the Engineer's Estimate.

SUBMITTAL TO THE BOARD OF SUPERVISORS COUNTY OF RIVERSIDE, STATE OF CALIFORNIA

The Transportation Department recommends the award of the contract to S&H Civilworks in the amount of $1,505,090.

ATTACHMENTS:

Vicinity Map
Attachment "A"
Summary of Bids
Addendum No. 1
Contract/Bonds/Insurance
Contractor's Bid Proposal

Jason Farin, Principal Management Analyst 5/5/2022

COUNTY OF RIVERSIDE
TRANSPORTATION DEPARTMENT

EL TORO ROAD / DEXTER AVENUE SIDEWALK PROJECT

CARMELA COURT TO 680-FEET NORTH OF CENTRAL AVENUE

COMMUNITY OF WARM SPRINGS

PROJECT No. D0-0014
State Project No. ATPSB1L-5956(275)

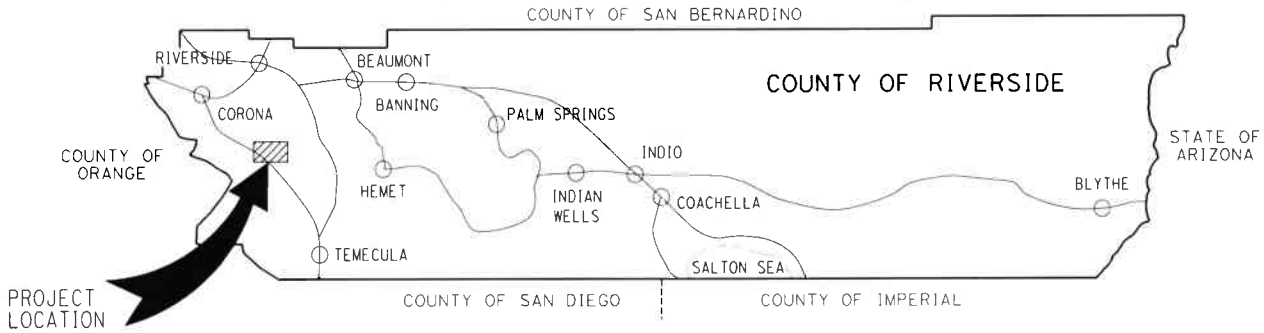

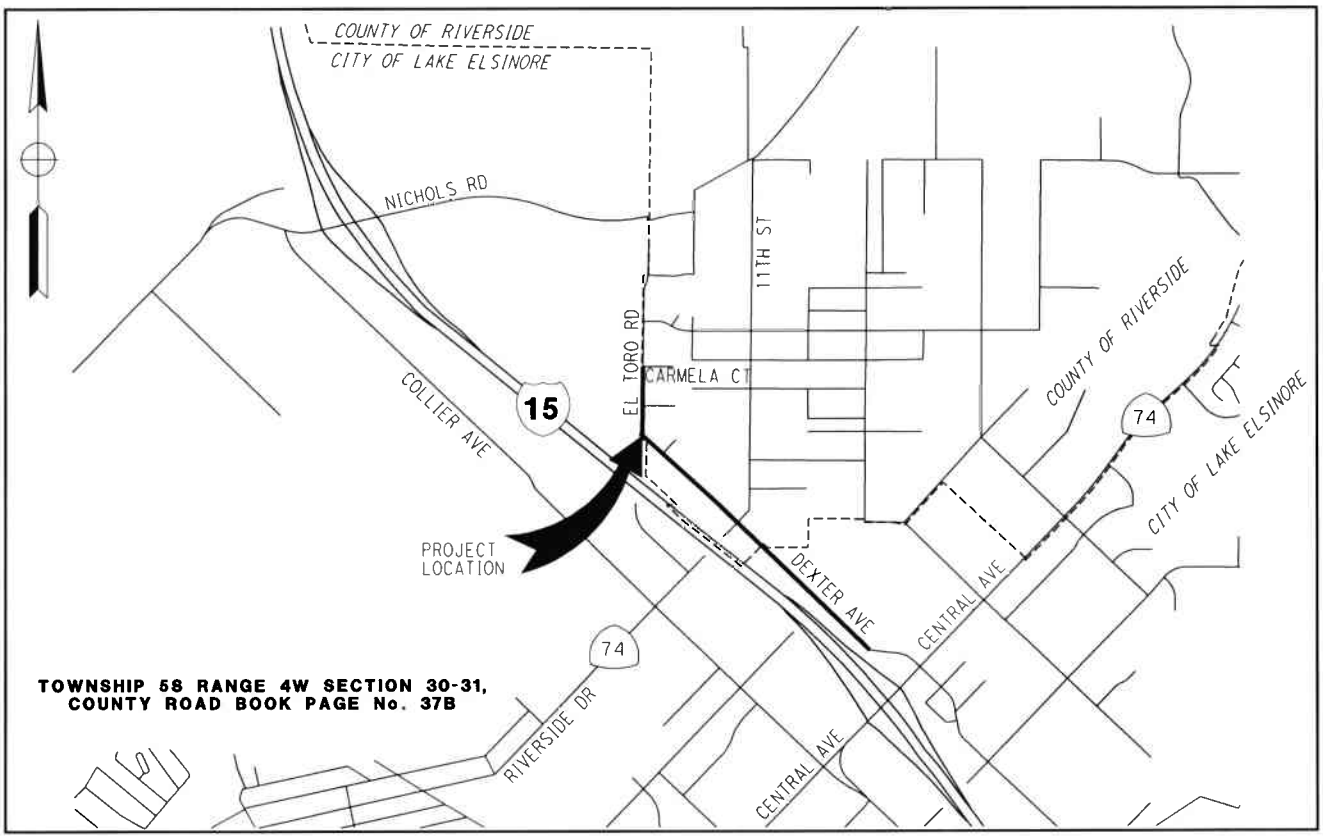

VICINITY MAP

Attachment "A"

Riverside County Transportation Department

Project: **Dexter Ave/El Toro Rd Sidewalk Project : Community of Warm Springs**

Project No.(s): **D0-0014**

Expenses as of: 3/9/2022

Project Costs and Budget

Activity		Incurred Costs	Projected Costs	Total Costs	Existing Budget	Proposed Budget
Preliminary Survey		100,364		101,000	93,000	101,000
Environmental		8,084	192	9,000	6,000	9,000
Design		374,575	461	376,000	344,000	376,000
Right-of-way			83,000	83,000	83,000	83,000
Utilities						
Construction			1,505,090	1,656,000	1,621,000	1,656,000
Construction Contingency	10.0%		150,509			
Construction Engineering & Inspection		9,947	170,000	170,000	170,000	170,000
Construction Survey		169	90,000	90,000	90,000	90,000
	Totals:	**493,139**	**1,999,252**	**2,485,000**	**2,407,000**	**2,485,000**

Project Funding

Code	Name	Existing Budget	Proposed Budget
221	Gas Tax/HUTA	197,000	262,000
256	Active Transportation Plan (ATP) - State	2,210,000	2,223,000
	Totals	**2,407,000**	**2,485,000**

Comments

Printed: March 30,22 7:52 AM

Riverside County Transportation Department
Summary of Bids

PROJECT: El Toro Road / Dexter Avenue Sidewalk Project
Carmela Court to 680-Feet North of Central Avenue
Community of Warm Springs

Advertised: January 25, 2022 (Agenda Item: 3.60)
Addenda: 1 (2/9/2022)
Bids Open: 2 pm Date: Wednesday, February 16, 2022

Project No. D0-0014
State Project No. ATPSB1L-5956(275)

	Company Name	BASE BID SCHEDULE El Toro Road / Dexter Avenue Sidewalk	Project Total
	COUNTY'S ESTIMATE	1,392,733.50	**$1,392,733.50**
1	**S&H Civilworks**	1,505,090.00	**$1,505,090.00**
2	**IE General Engineering Inc.**	1,541,068.00	**$1,541,068.00**
3	**Onyx Paving Company, Inc.**	1,661,000.00	**$1,661,000.00**
4	**All American Asphalt**	1,740,922.50	**$1,740,922.50**
5	**R.J. Noble Company**	1,854,405.00	**$1,854,405.00**
6	**EBS General Engineering Inc.**	2,001,632.00	**$2,001,632.00**
7	**Hardy & Harper, Inc.**	2,406,000.00	**$2,406,000.00**
8	**Los Angeles Engineering, Inc.**	2,610,000.00	**$2,610,000.00**
	Average Bid Prices	***$1,915,014.69***	***$1,915,014.69***

Riverside County Transportation Department
Summary of Bids

Advertised: January 25, 2022 (Agenda Item: 3.60)
Addenda: 1 (2/9/2022)
Bids Open: 2 pm Date: Wednesday, February 16, 2022

PROJECT: El Toro Road / Dexter Avenue Sidewalk Project
Carmela Court to 680-Feet North of Central Avenue
Community of Warm Springs
Project No. D0-0014
State Project No. ATPSB1L-5956(275)

BASE BID SCHEDULE - El Toro Road / Dexter Avenue Sidewalk Project

					COUNTY'S ESTIMATE		1 S&H Civilworks Colton, CA 92324	
ITEM NO.	ITEM CODE	CONTRACT ITEM	UNITS	QUANTITY	UNIT PRICE	ENG ESTIMATE	BID UNIT PRICE	BID ESTIMATE
1	015602	FUNDING AWARENESS SIGN	EA	2	950.00	1,900.00	2,000.00	4,000.00
2	066102	DUST ABATEMENT	LS	1	11,870.00	11,870.00	7,500.00	7,500.00
3	100100	DEVELOP WATER SUPPLY	LS	1	5,801.50	5,801.50	15,000.00	15,000.00
4	120100	TRAFFIC CONTROL SYSTEM	LS	1	44,800.00	44,800.00	15,000.00	15,000.00
5	130200	PREPARE WATER POLLUTION CONTROL PROGRAM	LS	1	9,800.00	9,800.00	15,000.00	15,000.00
6	170103	CLEARING AND GRUBBING	LS	1	34,800.00	34,800.00	15,000.00	15,000.00
7	190101(F)	ROADWAY EXCAVATION	CY	1,500	76.00	114,000.00	30.00	45,000.00
8	803170	RELOCATE FENCE (CHAIN LINK, WOOD, VINYL)	LF	400	23.75	9,500.00	30.00	12,000.00
9	800300	CHAIN LINK FENCE	LF	40	47.50	1,900.00	100.00	4,000.00
10	260203	CLASS 2 AGGREGATE BASE	CY	950	61.75	58,662.50	50.00	47,500.00
11	390132	HOT MIX ASPHALT (TYPE A)	TON	420	123.50	51,870.00	115.00	48,300.00
12	390126	RUBBERIZED ASPHALT CONCRETE (TYPE G)	TON	1,750	104.50	182,875.00	115.00	201,250.00
13	398200	COLD PLANE ASPHALT CONCRETE PAVEMENT	SQYD	11,500	7.12	81,880.00	1.00	11,500.00
14	013903	PLACE ASPHALT CONCRETE DIKE (CRS 212) (6")	LF	100	39.12	3,912.00	60.00	6,000.00
15	510516	MINOR CONCRETE (RETAINING WALL) [TYPE 6A CASE 1]	LF	40	475.00	19,000.00	60.00	2,400.00
16	017305	MINOR CONCRETE (CURB AND GUTTER) (CRS 201)	LF	5,000	19.95	99,750.00	50.00	250,000.00
17	017310	MINOR CONCRETE (DRIVEWAY APPROACH) (CRS 207)	EA	27	1,900.00	51,300.00	20.00	540.00
18	731521	MINOR CONCRETE (SIDEWALK)	SQFT	27,000	5.70	153,900.00	9.00	243,000.00
19	017306	MINOR CONCRETE (CURB RAMP) (CRS 403)	EA	16	3,325.00	53,200.00	4,500.00	72,000.00
20	017317	MINOR CONCRETE (CROSS-GUTTER AND SPANDREL)	SQFT	2,600	11.40	29,640.00	27.00	70,200.00

Riverside County Transportation Department
Summary of Bids

Advertised: January 25, 2022 (Agenda Item: 3.60)
Addenda: 1 (2/9/2022)
Bids Open: 2 pm Date: Wednesday, February 16, 2022

PROJECT: El Toro Road / Dexter Avenue Sidewalk Project
Carmela Court to 680-Feet North of Central Avenue
Community of Warm Springs
Project No. D0-0014
State Project No. ATPSB1L-5956(275)

BASE BID SCHEDULE - El Toro Road / Dexter Avenue Sidewalk Project (continued)

					COUNTY'S ESTIMATE		1 S&H Civilworks Colton, CA 92324	
ITEM NO.	ITEM CODE	CONTRACT ITEM	UNITS	QUANTITY	UNIT PRICE	ENG ESTIMATE	BID UNIT PRICE	BID ESTIMATE
21	730010	MINOR CONCRETE (CURB) [SIDEWALK RETAINING CURB]	LF	2,050	22.80	46,740.00	30.00	61,500.00
22	190185	SHOULDER BACKING	LF	6,500	3.80	24,700.00	5.00	32,500.00
23	017003	CATCH BASIN (CURB INLET) (CRS 300)	EA	2	9,500.00	19,000.00	5,000.00	10,000.00
24	017004	CATCH BASIN (COMBINATION INLET) (CRS 301 - No. 1)	EA	3	9,500.00	28,500.00	7,500.00	22,500.00
25	152607	MODIFY CATCH BASIN	EA	2	3,800.00	7,600.00	5,000.00	10,000.00
26	017105	JUNCTION STRUCTURE (RCFC&WCDS JS 227)	EA	4	1,140.00	4,560.00	4,000.00	16,000.00
27	665018	18" CORRUGATED STEEL PIPE (.109" THICK)	LF	300	114.00	34,200.00	200.00	60,000.00
28	731656	CURB RAMP DETECTABLE WARNING SURFACE	EA	2	190.00	380.00	1,000.00	2,000.00
29	037301	REMOVE EXISTING HARDSCAPE AND REPLACE IN KIND	LS	1	2,850.00	2,850.00	5,000.00	5,000.00
30	782110	RESET MAILBOX	EA	5	190.00	950.00	450.00	2,250.00
31	820250	REMOVE ROADSIDE SIGN	EA	15	190.00	2,850.00	500.00	7,500.00
32	820610	RELOCATE ROADSIDE SIGN [AND POST]	EA	10	237.50	2,375.00	600.00	6,000.00
33	820840	ROADSIDE SIGN - ONE POST	EA	21	285.00	5,985.00	650.00	13,650.00
34	820860	INSTALL SIGN [STRAP AND SADDLE BRACKET METHOD]	EA	4	285.00	1,140.00	500.00	2,000.00
35	840515	THERMOPLASTIC PAVEMENT MARKING	SQFT	850	4.75	4,037.50	5.00	4,250.00
36	840656	PAINT TRAFFIC STRIPE (2-COAT)	LF	7,000	1.76	12,320.00	1.00	7,000.00
37	810230(F)	PAVEMENT MARKER (RETROREFLECTIVE)	EA	450	5.70	2,565.00	5.00	2,250.00
38	150717	REMOVE TRAFFIC STRIPE AND PAVEMENT MARKING	SQFT	3,500	3.32	11,620.00	3.00	10,500.00
39	870700	FLASHING BEACON SYSTEM (2 LOCATIONS)	LS	1	40,000.00	40,000.00	25,000.00	25,000.00
40	010602	MISCELLANEOUS WORK (AS DIRECTED)	FA	1	120,000.00	120,000.00	120,000.00	120,000.00
		PROJECT TOTAL ITEMS 1 - 40				**1,392,733.50**		**1,505,090.00**

Riverside County Transportation Department
Summary of Bids

Advertised: January 25, 2022 (Agenda Item: 3.60)
Addenda: 1 (2/9/2022)
Bids Open: 2 pm Date: Wednesday, February 16, 2022

PROJECT: El Toro Road / Dexter Avenue Sidewalk Project
Carmela Court to 680-Feet North of Central Avenue
Community of Warm Springs
Project No. D0-0014
State Project No. ATPSB1L-5956(275)

BASE BID SCHEDULE - El Toro Road / Dexter Avenue Sidewalk Project

					2 IE General Engineering Inc. Beaumont, CA 92223		3 Onyx Paving Company, Inc. Anaheim, CA 92806	
ITEM NO.	ITEM CODE	CONTRACT ITEM	UNITS	QUANTITY	BID UNIT PRICE	BID ESTIMATE	BID UNIT PRICE	BID ESTIMATE
1	015602	FUNDING AWARENESS SIGN	EA	2	1,200.00	2,400.00	1,500.00	3,000.00
2	066102	DUST ABATEMENT	LS	1	6,500.00	6,500.00	13,000.00	13,000.00
3	100100	DEVELOP WATER SUPPLY	LS	1	5,000.00	5,000.00	13,000.00	13,000.00
4	120100	TRAFFIC CONTROL SYSTEM	LS	1	52,000.00	52,000.00	27,107.00	27,107.00
5	130200	PREPARE WATER POLLUTION CONTROL PROGRAM	LS	1	6,500.00	6,500.00	13,000.00	13,000.00
6	170103	CLEARING AND GRUBBING	LS	1	45,000.00	45,000.00	176,000.00	176,000.00
7	190101(F)	ROADWAY EXCAVATION	CY	1,500	50.00	75,000.00	51.00	76,500.00
8	803170	RELOCATE FENCE (CHAIN LINK, WOOD, VINYL)	LF	400	140.00	56,000.00	50.00	20,000.00
9	800300	CHAIN LINK FENCE	LF	40	500.00	20,000.00	125.00	5,000.00
10	260203	CLASS 2 AGGREGATE BASE	CY	950	70.00	66,500.00	44.00	41,800.00
11	390132	HOT MIX ASPHALT (TYPE A)	TON	420	105.00	44,100.00	111.00	46,620.00
12	390126	RUBBERIZED ASPHALT CONCRETE (TYPE G)	TON	1,750	117.00	204,750.00	99.00	173,250.00
13	398200	COLD PLANE ASPHALT CONCRETE PAVEMENT	SQYD	11,500	1.90	21,850.00	1.96	22,540.00
14	013903	PLACE ASPHALT CONCRETE DIKE (CRS 212) (6")	LF	100	35.00	3,500.00	30.00	3,000.00
15	510516	MINOR CONCRETE (RETAINING WALL) [TYPE 6A CASE 1]	LF	40	250.00	10,000.00	800.00	32,000.00
16	017305	MINOR CONCRETE (CURB AND GUTTER) (CRS 201)	LF	5,000	21.00	105,000.00	37.00	185,000.00
17	017310	MINOR CONCRETE (DRIVEWAY APPROACH) (CRS 207)	EA	27	6,500.00	175,500.00	2,700.00	72,900.00
18	731521	MINOR CONCRETE (SIDEWALK)	SQFT	27,000	5.50	148,500.00	6.27	169,290.00
19	017306	MINOR CONCRETE (CURB RAMP) (CRS 403)	EA	16	4,000.00	64,000.00	4,884.00	78,144.00
20	017317	MINOR CONCRETE (CROSS-GUTTER AND SPANDREL)	SQFT	2,600	12.00	31,200.00	18.81	48,906.00

Riverside County Transportation Department
Summary of Bids

PROJECT: El Toro Road / Dexter Avenue Sidewalk Project
Carmela Court to 680-Feet North of Central Avenue
Community of Warm Springs
Project No. D0-0014
State Project No. ATPSB1L-5956(275)

Advertised: January 25, 2022 (Agenda Item: 3.60)
Addenda: 1 (2/9/2022)
Bids Open: 2 pm Date: Wednesday, February 16, 2022

BASE BID SCHEDULE - El Toro Road / Dexter Avenue Sidewalk Project (continued)

					2 IE General Engineering Inc. Beaumont, CA 92223		3 Onyx Paving Company, Inc. Anaheim, CA 92806	
ITEM NO.	ITEM CODE	CONTRACT ITEM	UNITS	QUANTITY	BID UNIT PRICE	BID ESTIMATE	BID UNIT PRICE	BID ESTIMATE
21	730010	MINOR CONCRETE (CURB) [SIDEWALK RETAINING CURB]	LF	2,050	20.00	41,000.00	27.00	55,350.00
22	190185	SHOULDER BACKING	LF	6,500	1.95	12,675.00	3.00	19,500.00
23	017003	CATCH BASIN (CURB INLET) (CRS 300)	EA	2	12,500.00	25,000.00	11,500.00	23,000.00
24	017004	CATCH BASIN (COMBINATION INLET) (CRS 301 - No. 1)	EA	3	16,000.00	48,000.00	13,500.00	40,500.00
25	152607	MODIFY CATCH BASIN	EA	2	9,500.00	19,000.00	11,000.00	22,000.00
26	017105	JUNCTION STRUCTURE (RCFC&WCDS JS 227)	EA	4	5,000.00	20,000.00	4,500.00	18,000.00
27	665018	18" CORRUGATED STEEL PIPE (.109" THICK)	LF	300	175.00	52,500.00	200.00	60,000.00
28	731656	CURB RAMP DETECTABLE WARNING SURFACE	EA	2	500.00	1,000.00	1,250.00	2,500.00
29	037301	REMOVE EXISTING HARDSCAPE AND REPLACE IN KIND	LS	1	300.00	300.00	15,000.00	15,000.00
30	782110	RESET MAILBOX	EA	5	450.00	2,250.00	400.00	2,000.00
31	820250	REMOVE ROADSIDE SIGN	EA	15	44.00	660.00	84.00	1,260.00
32	820610	RELOCATE ROADSIDE SIGN [AND POST]	EA	10	138.00	1,380.00	200.00	2,000.00
33	820840	ROADSIDE SIGN - ONE POST	EA	21	330.00	6,930.00	333.00	6,993.00
34	820860	INSTALL SIGN [STRAP AND SADDLE BRACKET METHOD]	EA	4	302.00	1,208.00	200.00	800.00
35	840515	THERMOPLASTIC PAVEMENT MARKING	SQFT	850	5.00	4,250.00	10.00	8,500.00
36	840656	PAINT TRAFFIC STRIPE (2-COAT)	LF	7,000	0.44	3,080.00	0.44	3,080.00
37	810230(F)	PAVEMENT MARKER (RETROREFLECTIVE)	EA	450	5.50	2,475.00	4.00	1,800.00
38	150717	REMOVE TRAFFIC STRIPE AND PAVEMENT MARKING	SQFT	3,500	1.00	3,500.00	0.76	2,660.00
39	870700	FLASHING BEACON SYSTEM (2 LOCATIONS)	LS	1	32,560.00	32,560.00	36,000.00	36,000.00
40	010602	MISCELLANEOUS WORK (AS DIRECTED)	FA	1	120,000.00	120,000.00	120,000.00	120,000.00
		PROJECT TOTAL ITEMS 1 - 40				**1,541,068.00**		**1,661,000.00**

Riverside County Transportation Department
Summary of Bids

Advertised: January 25, 2022 (Agenda Item: 3.60)
Addenda: 1 (2/9/2022)
Bids Open: 2 pm Date: Wednesday, February 16, 2022

PROJECT: El Toro Road / Dexter Avenue Sidewalk Project
Carmela Court to 680-Feet North of Central Avenue
Community of Warm Springs
Project No. D0-0014
State Project No. ATPSB1L-5956(275)

BASE BID SCHEDULE - El Toro Road / Dexter Avenue Sidewalk Project

					4		5	
					All American Asphalt Corona, CA 92879		R.J. Noble Company Orange, CA 92856	
ITEM NO.	ITEM CODE	CONTRACT ITEM	UNITS	QUANTITY	BID UNIT PRICE	BID ESTIMATE	BID UNIT PRICE	BID ESTIMATE
1	015602	FUNDING AWARENESS SIGN	EA	2	1,500.00	3,000.00	550.00	1,100.00
2	066102	DUST ABATEMENT	LS	1	11,800.00	11,800.00	1,600.00	1,600.00
3	100100	DEVELOP WATER SUPPLY	LS	1	2,600.00	2,600.00	1,000.00	1,000.00
4	120100	TRAFFIC CONTROL SYSTEM	LS	1	44,800.00	44,800.00	95,000.00	95,000.00
5	130200	PREPARE WATER POLLUTION CONTROL PROGRAM	LS	1	9,800.00	9,800.00	3,000.00	3,000.00
6	170103	CLEARING AND GRUBBING	LS	1	26,000.00	26,000.00	38,000.00	38,000.00
7	190101(F)	ROADWAY EXCAVATION	CY	1,500	80.00	120,000.00	198.00	297,000.00
8	803170	RELOCATE FENCE (CHAIN LINK, WOOD, VINYL)	LF	400	57.00	22,800.00	57.25	22,900.00
9	800300	CHAIN LINK FENCE	LF	40	130.00	5,200.00	130.00	5,200.00
10	260203	CLASS 2 AGGREGATE BASE	CY	950	105.00	99,750.00	127.00	120,650.00
11	390132	HOT MIX ASPHALT (TYPE A)	TON	420	150.00	63,000.00	174.00	73,080.00
12	390126	RUBBERIZED ASPHALT CONCRETE (TYPE G)	TON	1,750	102.00	178,500.00	87.00	152,250.00
13	398200	COLD PLANE ASPHALT CONCRETE PAVEMENT	SQYD	11,500	1.80	20,700.00	2.45	28,175.00
14	013903	PLACE ASPHALT CONCRETE DIKE (CRS 212) (6")	LF	100	50.00	5,000.00	79.00	7,900.00
15	510516	MINOR CONCRETE (RETAINING WALL) [TYPE 6A CASE 1]	LF	40	720.00	28,800.00	690.00	27,600.00
16	017305	MINOR CONCRETE (CURB AND GUTTER) (CRS 201)	LF	5,000	50.00	250,000.00	38.50	192,500.00
17	017310	MINOR CONCRETE (DRIVEWAY APPROACH) (CRS 207)	EA	27	2,250.00	60,750.00	1,500.00	40,500.00
18	731521	MINOR CONCRETE (SIDEWALK)	SQFT	27,000	7.00	189,000.00	6.25	168,750.00
19	017306	MINOR CONCRETE (CURB RAMP) (CRS 403)	EA	16	4,825.00	77,200.00	3,700.00	59,200.00
20	017317	MINOR CONCRETE (CROSS-GUTTER AND SPANDREL)	SQFT	2,600	18.00	46,800.00	17.00	44,200.00

Riverside County Transportation Department
Summary of Bids

Advertised: January 25, 2022 (Agenda Item: 3.60)
Addenda: 1 (2/9/2022)
Bids Open: 2 pm Date: Wednesday, February 16, 2022

PROJECT: El Toro Road / Dexter Avenue Sidewalk Project
Carmela Court to 680-Feet North of Central Avenue
Community of Warm Springs
Project No. D0-0014
State Project No. ATPSB1L-5956(275)

BASE BID SCHEDULE - El Toro Road / Dexter Avenue Sidewalk Project (continued)

					4		5	
					All American Asphalt Corona, CA 92879		R.J. Noble Company Orange, CA 92856	
ITEM NO.	ITEM CODE	CONTRACT ITEM	UNITS	QUANTITY	BID UNIT PRICE	BID ESTIMATE	BID UNIT PRICE	BID ESTIMATE
21	730010	MINOR CONCRETE (CURB) [SIDEWALK RETAINING CURB]	LF	2,050	31.00	63,550.00	32.00	65,600.00
22	190185	SHOULDER BACKING	LF	6,500	9.00	58,500.00	5.50	35,750.00
23	017003	CATCH BASIN (CURB INLET) (CRS 300)	EA	2	9,300.00	18,600.00	12,000.00	24,000.00
24	017004	CATCH BASIN (COMBINATION INLET) (CRS 301 - No. 1)	EA	3	11,500.00	34,500.00	13,700.00	41,100.00
25	152607	MODIFY CATCH BASIN	EA	2	10,700.00	21,400.00	10,000.00	20,000.00
26	017105	JUNCTION STRUCTURE (RCFC&WCDS JS 227)	EA	4	2,750.00	11,000.00	4,400.00	17,600.00
27	665018	18" CORRUGATED STEEL PIPE (.109" THICK)	LF	300	275.00	82,500.00	225.00	67,500.00
28	731656	CURB RAMP DETECTABLE WARNING SURFACE	EA	2	1,400.00	2,800.00	1,000.00	2,000.00
29	037301	REMOVE EXISTING HARDSCAPE AND REPLACE IN KIND	LS	1	2,600.00	2,600.00	5,500.00	5,500.00
30	782110	RESET MAILBOX	EA	5	780.00	3,900.00	840.00	4,200.00
31	820250	REMOVE ROADSIDE SIGN	EA	15	85.00	1,275.00	84.00	1,260.00
32	820610	RELOCATE ROADSIDE SIGN [AND POST]	EA	10	190.00	1,900.00	190.00	1,900.00
33	820840	ROADSIDE SIGN - ONE POST	EA	21	335.00	7,035.00	330.00	6,930.00
34	820860	INSTALL SIGN [STRAP AND SADDLE BRACKET METHOD]	EA	4	130.00	520.00	130.00	520.00
35	840515	THERMOPLASTIC PAVEMENT MARKING	SQFT	850	10.00	8,500.00	9.50	8,075.00
36	840656	PAINT TRAFFIC STRIPE (2-COAT)	LF	7,000	0.45	3,150.00	0.45	3,150.00
37	810230(F)	PAVEMENT MARKER (RETROREFLECTIVE)	EA	450	3.15	1,417.50	3.20	1,440.00
38	150717	REMOVE TRAFFIC STRIPE AND PAVEMENT MARKING	SQFT	3,500	0.65	2,275.00	0.65	2,275.00
39	870700	FLASHING BEACON SYSTEM (2 LOCATIONS)	LS	1	30,000.00	30,000.00	46,000.00	46,000.00
40	010602	MISCELLANEOUS WORK (AS DIRECTED)	FA	1	120,000.00	120,000.00	120,000.00	120,000.00
		PROJECT TOTAL ITEMS 1 - 40				**1,740,922.50**		**1,854,405.00**

Riverside County Transportation Department
Summary of Bids

Advertised: January 25, 2022 (Agenda Item: 3.60)
Addenda: 1 (2/9/2022)
Bids Open: 2 pm Date: Wednesday, February 16, 2022

PROJECT: El Toro Road / Dexter Avenue Sidewalk Project
Carmela Court to 680-Feet North of Central Avenue
Community of Warm Springs
Project No. D0-0014
State Project No. ATPSB1L-5956(275)

BASE BID SCHEDULE - El Toro Road / Dexter Avenue Sidewalk Project

					6 EBS General Engineering Inc. Corona, CA 92879		7 Hardy & Harper, Inc. Lake Forest, CA 92630	
ITEM NO.	ITEM CODE	CONTRACT ITEM	UNITS	QUANTITY	BID UNIT PRICE	BID ESTIMATE	BID UNIT PRICE	BID ESTIMATE
1	015602	FUNDING AWARENESS SIGN	EA	2	1,050.00	2,100.00	1,300.00	2,600.00
2	066102	DUST ABATEMENT	LS	1	5,000.00	5,000.00	19,795.00	19,795.00
3	100100	DEVELOP WATER SUPPLY	LS	1	22,000.00	22,000.00	12,840.00	12,840.00
4	120100	TRAFFIC CONTROL SYSTEM	LS	1	86,000.00	86,000.00	98,950.00	98,950.00
5	130200	PREPARE WATER POLLUTION CONTROL PROGRAM	LS	1	5,000.00	5,000.00	12,763.00	12,763.00
6	170103	CLEARING AND GRUBBING	LS	1	176,090.00	176,090.00	368,000.00	368,000.00
7	190101(F)	ROADWAY EXCAVATION	CY	1,500	168.00	252,000.00	74.90	112,350.00
8	803170	RELOCATE FENCE (CHAIN LINK, WOOD, VINYL)	LF	400	60.00	24,000.00	100.00	40,000.00
9	800300	CHAIN LINK FENCE	LF	40	137.50	5,500.00	80.00	3,200.00
10	260203	CLASS 2 AGGREGATE BASE	CY	950	89.00	84,550.00	53.50	50,825.00
11	390132	HOT MIX ASPHALT (TYPE A)	TON	420	104.00	43,680.00	115.00	48,300.00
12	390126	RUBBERIZED ASPHALT CONCRETE (TYPE G)	TON	1,750	99.00	173,250.00	93.00	162,750.00
13	398200	COLD PLANE ASPHALT CONCRETE PAVEMENT	SQYD	11,500	2.08	23,920.00	2.25	25,875.00
14	013903	PLACE ASPHALT CONCRETE DIKE (CRS 212) (6")	LF	100	85.00	8,500.00	56.00	5,600.00
15	510516	MINOR CONCRETE (RETAINING WALL) [TYPE 6A CASE 1]	LF	40	490.00	19,600.00	632.00	25,280.00
16	017305	MINOR CONCRETE (CURB AND GUTTER) (CRS 201)	LF	5,000	35.00	175,000.00	63.00	315,000.00
17	017310	MINOR CONCRETE (DRIVEWAY APPROACH) (CRS 207)	EA	27	4,147.00	111,969.00	5,030.00	135,810.00
18	731521	MINOR CONCRETE (SIDEWALK)	SQFT	27,000	6.20	167,400.00	10.50	283,500.00
19	017306	MINOR CONCRETE (CURB RAMP) (CRS 403)	EA	16	5,300.00	84,800.00	7,000.00	112,000.00
20	017317	MINOR CONCRETE (CROSS-GUTTER AND SPANDREL)	SQFT	2,600	24.00	62,400.00	22.00	57,200.00

Riverside County Transportation Department
Summary of Bids

Advertised: January 25, 2022 (Agenda Item: 3.60)
Addenda: 1 (2/9/2022)
Bids Open: 2 pm Date: Wednesday, February 16, 2022

PROJECT: El Toro Road / Dexter Avenue Sidewalk Project
Carmela Court to 680-Feet North of Central Avenue
Community of Warm Springs
Project No. D0-0014
State Project No. ATPSB1L-5956(275)

BASE BID SCHEDULE - El Toro Road / Dexter Avenue Sidewalk Project (continued)

					6 EBS General Engineering Inc. Corona, CA 92879		7 Hardy & Harper, Inc. Lake Forest, CA 92630	
ITEM NO.	ITEM CODE	CONTRACT ITEM	UNITS	QUANTITY	BID UNIT PRICE	BID ESTIMATE	BID UNIT PRICE	BID ESTIMATE
21	730010	MINOR CONCRETE (CURB) [SIDEWALK RETAINING CURB]	LF	2,050	53.00	108,650.00	47.00	96,350.00
22	190185	SHOULDER BACKING	LF	6,500	1.50	9,750.00	4.00	26,000.00
23	017003	CATCH BASIN (CURB INLET) (CRS 300)	EA	2	12,540.00	25,080.00	13,700.00	27,400.00
24	017004	CATCH BASIN (COMBINATION INLET) (CRS 301 - No. 1)	EA	3	14,388.00	43,164.00	10,500.00	31,500.00
25	152607	MODIFY CATCH BASIN	EA	2	10,560.00	21,120.00	17,500.00	35,000.00
26	017105	JUNCTION STRUCTURE (RCFC&WCDS JS 227)	EA	4	4,620.00	18,480.00	3,800.00	15,200.00
27	665018	18" CORRUGATED STEEL PIPE (.109" THICK)	LF	300	178.00	53,400.00	283.00	84,900.00
28	731656	CURB RAMP DETECTABLE WARNING SURFACE	EA	2	1,150.00	2,300.00	1,250.00	2,500.00
29	037301	REMOVE EXISTING HARDSCAPE AND REPLACE IN KIND	LS	1	5,400.00	5,400.00	11,300.00	11,300.00
30	782110	RESET MAILBOX	EA	5	450.00	2,250.00	1,100.00	5,500.00
31	820250	REMOVE ROADSIDE SIGN	EA	15	88.00	1,320.00	86.00	1,290.00
32	820610	RELOCATE ROADSIDE SIGN [AND POST]	EA	10	198.00	1,980.00	193.00	1,930.00
33	820840	ROADSIDE SIGN - ONE POST	EA	21	352.00	7,392.00	343.00	7,203.00
34	820860	INSTALL SIGN [STRAP AND SADDLE BRACKET METHOD]	EA	4	137.50	550.00	133.75	535.00
35	840515	THERMOPLASTIC PAVEMENT MARKING	SQFT	850	10.12	8,602.00	9.84	8,364.00
36	840656	PAINT TRAFFIC STRIPE (2-COAT)	LF	7,000	0.44	3,080.00	0.43	3,010.00
37	810230(F)	PAVEMENT MARKER (RETROREFLECTIVE)	EA	450	3.30	1,485.00	3.20	1,440.00
38	150717	REMOVE TRAFFIC STRIPE AND PAVEMENT MARKING	SQFT	3,500	0.66	2,310.00	0.64	2,240.00
39	870700	FLASHING BEACON SYSTEM (2 LOCATIONS)	LS	1	32,560.00	32,560.00	31,700.00	31,700.00
40	010602	MISCELLANEOUS WORK (AS DIRECTED)	FA	1	120,000.00	120,000.00	120,000.00	120,000.00
		PROJECT TOTAL ITEMS 1 - 40				**2,001,632.00**		**2,406,000.00**

Riverside County Transportation Department
Summary of Bids

PROJECT: El Toro Road / Dexter Avenue Sidewalk Project
Carmela Court to 680-Feet North of Central Avenue
Community of Warm Springs
Project No. D0-0014
State Project No. ATPSB1L-5956(275)

Advertised: January 25, 2022 (Agenda Item: 3.60)
Addenda: 1 (2/9/2022)
Bids Open: 2 pm Date: Wednesday, February 16, 2022

BASE BID SCHEDULE - El Toro Road / Dexter Avenue Sidewalk Project

					8 Los Angeles Engineering, Inc. Covina, CA 91723			
ITEM NO.	ITEM CODE	CONTRACT ITEM	UNITS	QUANTITY	BID UNIT PRICE	BID ESTIMATE		
1	015602	FUNDING AWARENESS SIGN	EA	2	1,000.00	2,000.00		
2	066102	DUST ABATEMENT	LS	1	50,000.00	50,000.00		
3	100100	DEVELOP WATER SUPPLY	LS	1	2,500.00	2,500.00		
4	120100	TRAFFIC CONTROL SYSTEM	LS	1	100,000.00	100,000.00		
5	130200	PREPARE WATER POLLUTION CONTROL PROGRAM	LS	1	2,500.00	2,500.00		
6	170103	CLEARING AND GRUBBING	LS	1	96,415.00	96,415.00		
7	190101(F)	ROADWAY EXCAVATION	CY	1,500	340.00	510,000.00		
8	803170	RELOCATE FENCE (CHAIN LINK, WOOD, VINYL)	LF	400	85.00	34,000.00		
9	800300	CHAIN LINK FENCE	LF	40	500.00	20,000.00		
10	260203	CLASS 2 AGGREGATE BASE	CY	950	60.00	57,000.00		
11	390132	HOT MIX ASPHALT (TYPE A)	TON	420	165.00	69,300.00		
12	390126	RUBBERIZED ASPHALT CONCRETE (TYPE G)	TON	1,750	130.00	227,500.00		
13	398200	COLD PLANE ASPHALT CONCRETE PAVEMENT	SQYD	11,500	2.50	28,750.00		
14	013903	PLACE ASPHALT CONCRETE DIKE (CRS 212) (6")	LF	100	120.00	12,000.00		
15	510516	MINOR CONCRETE (RETAINING WALL) [TYPE 6A CASE 1]	LF	40	1,500.00	60,000.00		
16	017305	MINOR CONCRETE (CURB AND GUTTER) (CRS 201)	LF	5,000	40.00	200,000.00		
17	017310	MINOR CONCRETE (DRIVEWAY APPROACH) (CRS 207)	EA	27	5,000.00	135,000.00		
18	731521	MINOR CONCRETE (SIDEWALK)	SQFT	27,000	9.00	243,000.00		
19	017306	MINOR CONCRETE (CURB RAMP) (CRS 403)	EA	16	5,500.00	88,000.00		
20	017317	MINOR CONCRETE (CROSS-GUTTER AND SPANDREL)	SQFT	2,600	30.00	78,000.00		

Riverside County Transportation Department
Summary of Bids

Advertised: January 25, 2022 (Agenda Item: 3.60)
Addenda: 1 (2/9/2022)
Bids Open: 2 pm Date: Wednesday, February 16, 2022

PROJECT: El Toro Road / Dexter Avenue Sidewalk Project
Carmela Court to 680-Feet North of Central Avenue
Community of Warm Springs
Project No. D0-0014
State Project No. ATPSB1L-5956(275)

BASE BID SCHEDULE - El Toro Road / Dexter Avenue Sidewalk Project (continued)

					8 Los Angeles Engineering, Inc. Covina, CA 91723			
ITEM NO.	ITEM CODE	CONTRACT ITEM	UNITS	QUANTITY	BID UNIT PRICE	BID ESTIMATE		
21	730010	MINOR CONCRETE (CURB) [SIDEWALK RETAINING CURB]	LF	2,050	100.00	205,000.00		
22	190185	SHOULDER BACKING	LF	6,500	4.00	26,000.00		
23	017003	CATCH BASIN (CURB INLET) (CRS 300)	EA	2	10,000.00	20,000.00		
24	017004	CATCH BASIN (COMBINATION INLET) (CRS 301 - No. 1)	EA	3	11,000.00	33,000.00		
25	152607	MODIFY CATCH BASIN	EA	2	9,000.00	18,000.00		
26	017105	JUNCTION STRUCTURE (RCFC&WCDS JS 227)	EA	4	2,000.00	8,000.00		
27	665018	18" CORRUGATED STEEL PIPE (.109" THICK)	LF	300	250.00	75,000.00		
28	731656	CURB RAMP DETECTABLE WARNING SURFACE	EA	2	550.00	1,100.00		
29	037301	REMOVE EXISTING HARDSCAPE AND REPLACE IN KIND	LS	1	25,000.00	25,000.00		
30	782110	RESET MAILBOX	EA	5	400.00	2,000.00		
31	820250	REMOVE ROADSIDE SIGN	EA	15	95.00	1,425.00		
32	820610	RELOCATE ROADSIDE SIGN [AND POST]	EA	10	215.00	2,150.00		
33	820840	ROADSIDE SIGN - ONE POST	EA	21	385.00	8,085.00		
34	820860	INSTALL SIGN [STRAP AND SADDLE BRACKET METHOD]	EA	4	150.00	600.00		
35	840515	THERMOPLASTIC PAVEMENT MARKING	SQFT	850	10.00	8,500.00		
36	840656	PAINT TRAFFIC STRIPE (2-COAT)	LF	7,000	0.45	3,150.00		
37	810230(F)	PAVEMENT MARKER (RETROREFLECTIVE)	EA	450	3.50	1,575.00		
38	150717	REMOVE TRAFFIC STRIPE AND PAVEMENT MARKING	SQFT	3,500	0.70	2,450.00		
39	870700	FLASHING BEACON SYSTEM (2 LOCATIONS)	LS	1	33,000.00	33,000.00		
40	010602	MISCELLANEOUS WORK (AS DIRECTED)	FA	1	120,000.00	120,000.00		
		PROJECT TOTAL ITEMS 1 - 40				**2,610,000.00**		

Mark Lancaster, P.E.
Director of Transportation

COUNTY OF RIVERSIDE

TRANSPORTATION AND LAND MANAGEMENT AGENCY

Transportation Department

Mojahed Salama, P.E.
Deputy for
Transportation/Capital Projects
Richard Lantis, P.L.S.
Deputy for
Transportation/Planning and

ADDENDUM NUMBER 1

Dated February 9, 2022

to the
Specifications and Contract Documents
for the construction of

El Toro Road / Dexter Avenue Sidewalk Project
Carmela Court to 680-Feet North of Central Avenue
Community of Warm Springs
Project No. D0-0014
State Project No. ATPSB1L-5956(275)

Bids Due: **Wednesday, February 16, 2022; 2:00 p.m.**
14th Street Transportation Annex
3525 14th Street; Riverside, CA 92501
(951) 955-6780

This Addendum is issued pursuant to the Instructions to Bidders, Item No. 8, of the Contract Documents for the reference project. This Addendum is issued as a supplement to the specification and special provisions for the referenced project. The revisions to the specifications shall become a part of the Contract Documents, and each bidder shall acknowledge receipt thereof on the Bid (Proposal). Bidders are directed to sign this addendum as acknowledged and attach the signed addendum to the contractor's submitted proposal.

Note: During the advertisement period of this project, this document and attachments (if any) are available upon request at the office of the Transportation Department, and are available as a free download at the Transportation Department's website:

http://rctlma.org/trans/Contractors-Corner/Notices-Inviting-Bids

MODIFICATIONS / CLARIFICATIONS TO SPECIAL PROVISIONS:

Item 1: Revised Proposal.
Refer to "Proposal" pages B2-B3. Delete and replace "Proposal" (pages B2-B3) with "Proposal (Revised)" attached herewith as **Attachment "A".**

Note: Revisions made to the proposal by Addendum No. 1 are written with blue font / blue numbers in Attachment "A".

a. Estimated Quantity has been revised for the following bid items:

Item 14, PLACE ASPHALT CONCRETE DIKE (CRS 212) (6")
Item 21, MINOR CONCRETE (CURB) [SIDEWALK RETAINING CURB]
Item 33, ROADSIDE SIGN - ONE POST
Item 35, THERMOPLASTIC PAVEMENT MARKING

b. The description has been revised for the following bid items:

Item 39, FLASHING BEACON SYSTEM (2 LOCATIONS)

Item 2: Chain Link Fences

Refer to sub-section 80-3.04, "Payment" of section 80-3, "Chain Link Fences," on page 53 of the special provisions.

Delete the paragraph in section 80-3.04, "Payment", and replace it with the following paragraph:

Chain Link Fence shall be measured and paid for at the contract unit price per linear feet; and shall include full compensation for all labor, materials, tools, and equipment and for doing all work involved in installing chain link fence Chain Link Fence where shown on the plans including any necessary excavation and backfill, installation of anchor posts in retaining curb per Caltrans Standard B11-7, furnishing and placing reinforcement steel bars, and no additional compensation will be allowed therefor.

Item 3: Solar Powered Flashing Beacon

Refer to Section 87-1, "General, Solar Powered Flashing Beacon", on pages 59 through 61 of the special provisions.

The following special provisions are added to sub-section A "General" of Solar Powered Flashing Beacon provisions.

Location where Flashing Beacons work is to be performed:

- El Toro Road and Carmela Court/ School Main Driveway
- Dexter Avenue and 11th Street

Delete the payment paragraph on page 61 of the special provisions and replace it with the following paragraph:

Payment

The contract price paid **per lump sum** for Flashing Beacon System (2 Locations) shall include full compensation for furnishing all labor, materials, tools, equipment, and incidentals, and for doing all the work involved in installing solar powered flashing beacons systems complete in-place at El Toro Road and Carmela Court/ School Main Driveway and at Dexter Avenue and 11th Street, and no additional compensation will be allowed therefor.

MODIFICATIONS / CLARIFICATIONS TO THE PLANS

Item 4: Plan sheet revisions

Refer to Plan Sheets for El Toro Road / Dexter Avenue Sidewalk Project. The following Plan sheets are revised and issued hereby as part of **Attachment "B"**. Delete and replace the following ten (10) plan sheets from the set:

Summary of Modifications Made to Plans

1. Plan sheet 2 of 21, X-1, modified Construction Note No. 32
2. Plan sheet 3 of 21, C-1, modified Construction Note No. 32, modified dimension of retaining curb on detail No. 23
3. Plan sheet 6 of 21, C-4, modified few FL and TC elevations on the west side curb ramps at Dexter Avenue and 11th Street intersection
4. Plan sheet 7 of 21, L-1, modified Construction Note No. 32, retaining curb dimension (6") added to few callouts for Construction Note No. 23, added callouts for adjust pullbox to grade by SCE
5. Plan sheet 8 of 21, L-2, modified Construction Note No. 32, retaining curb dimension (6") added to few callouts for Construction Note No. 23
6. Plan sheet 9 of 21, L-3, modified Construction Note No. 32, retaining curb dimension (6") added to few callouts for Construction Note No. 23, modified limits of retaining curb
7. Plan sheet 10 of 21, L-4, modified Construction Note No. 32, retaining curb dimension (6" or 18") added to few callouts for Construction Note No. 23
8. Plan sheet 11 of 21, L-5, modified Construction Note No. 32, retaining curb dimension (6" or 12" or 12"-24") added to few callouts for Construction Note No. 23
9. Plan sheet 12 of 21, L-6, modified Construction Note No. 32, retaining curb dimension (6") added to few callouts for Construction Note No. 23, modified width of 11th Street to protect guy pole in place, reduced curb and gutter quantity, increased AC dike quantity
10. Plan sheet 17 of 21, PD-1, modified width of 11th Street, added limit line, paving marking, and roadside sign

Note: Revised plan sheets are posted on the County website and available for download during the advertisement period.

http://rctlma.org/trans/Contractors-Corner/Notices-Inviting-Bids

ATTACHMENTS
A – Revised Proposal (2 pages)
B – Revised Plan Sheets (10 sheets)

This addendum has been prepared under the direction of the following registered Civil Engineer(s):

Recommended by:

Brett Craig, PE
Senior Civil Engineer

REGISTERED PROFESSIONAL ENGINEER
Brett Craig
No. C- 84116
CIVIL
STATE OF CALIFORNIA

Concurrence:

Dennis Acuna, PE
Engineering Division Manager

Acknowledged: _____ Date: _____
(Contractor)

JRJ: jrj:rr

Note: Refer to Instruction to Bidders Item No. 8, "Addenda". Submission of all addendum pages and non-bidding document attachments of addendum are not necessary for Bid submittal. Submittal of this acknowledgement page is adequate for Bid reception. Bidders are reminded to list addendum number(s) received on the first page of the Bid form (Proposal).

ISSUED BY ADDENDUM No. 1
ATTACHMENT "A"

El Toro Road / Dexter Avenue
Sidewalk Project
Carmela Court to 680-Feet North of Central Avenue
Community of Warm Springs
Project No. D0-0014
State Project No. ATPSB1L-5956(275)

REVISED PROPOSAL

ITEM No.	ITEM CODE	ITEM	UNIT	ESTIMATED QUANTITY	ITEM PRICE (IN FIGURES)	TOTAL (IN FIGURES)
1	015602	FUNDING AWARENESS SIGN	EA	2		
2	066102	DUST ABATEMENT	LS	1		
3	100100	DEVELOP WATER SUPPLY	LS	1		
4	120100	TRAFFIC CONTROL SYSTEM	LS	1		
5	130200	PREPARE WATER POLLUTION CONTROL PROGRAM	LS	1		
6	170103	CLEARING AND GRUBBING	LS	1		
7	190101 (F)	ROADWAY EXCAVATION	CY	1,500		
8	803170	RELOCATE FENCE (CHAIN LINK, WOOD, VINYL)	LF	400		
9	800300	CHAIN LINK FENCE	LF	40		
10	260203	CLASS 2 AGGREGATE BASE	CY	950		
11	390132	HOT MIX ASPHALT (TYPE A)	TON	420		
12	390126	RUBBERIZED ASPHALT CONCRETE (TYPE G)	TON	1,750		
13	398200	COLD PLANE ASPHALT CONCRETE PAVEMENT	SQYD	11,500		
14	013903	PLACE ASPHALT CONCRETE DIKE (CRS 212) (6")	LF	**100**		
15	510516	MINOR CONCRETE (RETAINING WALL) [TYPE 6A CASE 1]	LF	40		
16	17305	MINOR CONCRETE (CURB AND GUTTER) (CRS 201)	LF	5,000		
17	017310	MINOR CONCRETE (DRIVEWAY APPROACH) (CRS 207)	EA	27		
18	731521	MINOR CONCRETE (SIDEWALK)	SQFT	27,000		
19	017306	MINOR CONCRETE (CURB RAMP) (CRS 403)	EA	16		
20	017317	MINOR CONCRETE (CROSS-GUTTER AND SPANDREL)	SQFT	2,600		
21	730010	MINOR CONCRETE (CURB) [SIDEWALK RETAINING CURB]	LF	**2,050**		

REVISED PROPOSAL

ITEM No.	ITEM CODE	ITEM	UNIT	ESTIMATED QUANTITY	ITEM PRICE (IN FIGURES)	TOTAL (IN FIGURES)
22	190185	SHOULDER BACKING	LF	6,500		
23	017003	CATCH BASIN (CURB INLET) (CRS 300)	EA	2		
24	017004	CATCH BASIN (COMBINATION INLET) (CRS 301 - No. 1)	EA	3		
25	152607	MODIFY CATCH BASIN	EA	2		
26	017105	JUNCTION STRUCTURE (RCFC&WCDS JS 227)	EA	4		
27	665018	18" CORRUGATED STEEL PIPE (.109" THICK)	LF	300		
28	731656	CURB RAMP DETECTABLE WARNING SURFACE	EA	2		
29	037301	REMOVE EXISTING HARDSCAPE AND REPLACE IN KIND	LS	1		
30	782110	RESET MAILBOX	EA	5		
31	820250	REMOVE ROADSIDE SIGN	EA	15		
32	820610	RELOCATE ROADSIDE SIGN [AND POST]	EA	10		
33	820840	ROADSIDE SIGN - ONE POST	EA	**21**		
34	820860	INSTALL SIGN [STRAP AND SADDLE BRACKET METHOD]	EA	4		
35	840515	THERMOPLASTIC PAVEMENT MARKING	SQFT	**850**		
36	840656	PAINT TRAFFIC STRIPE (2-COAT)	LF	7,000		
37	810230 (F)	PAVEMENT MARKER (RETROREFLECTIVE)	EA	450		
38	150717	REMOVE TRAFFIC STRIPE AND PAVEMENT MARKING	SQFT	3,500		
39	870700	**FLASHING BEACON SYSTEM (2 LOCATIONS)**	LS	1		
40	010602	MISCELLANEOUS WORK (AS DIRECTED)	FA	1	120,000.00	120,000.00

PROJECT
TOTAL _____ $_____
ITEMS 1-40 "WORDS"

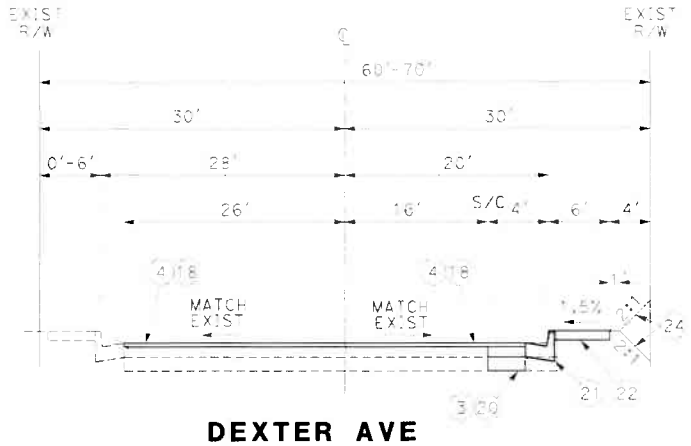

DEXTER AVE

STA 41+54 TO STA 42+99
NTS

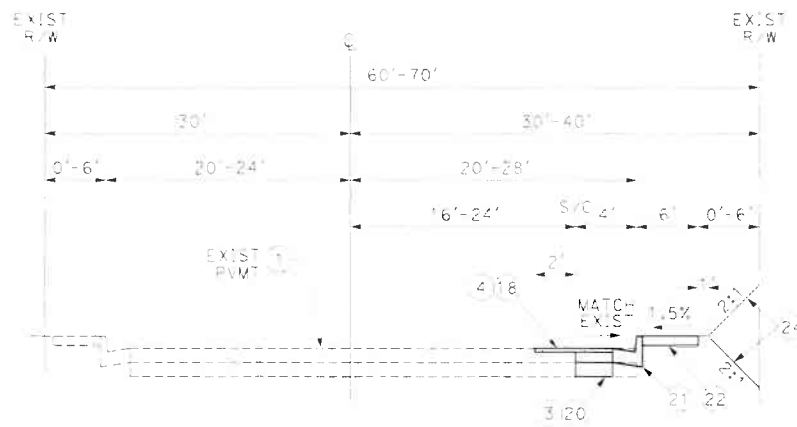

DEXTER AVE

STA 45+28 TO STA 61+07
NTS

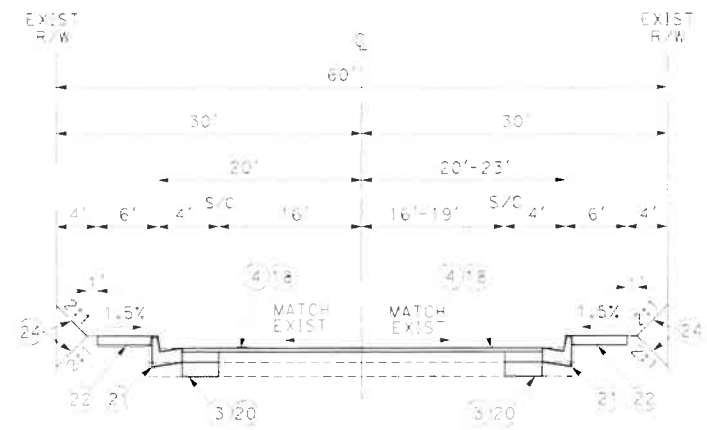

DEXTER AVE

STA 26+65 TO STA 40+54
NTS

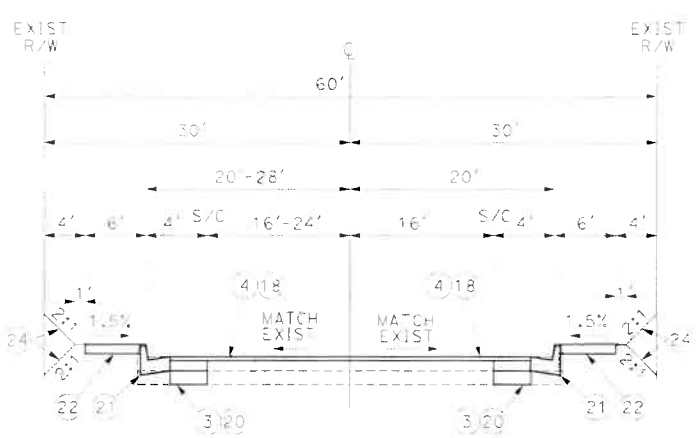

DEXTER AVE

STA 42+99 TO STA 45+28
NTS

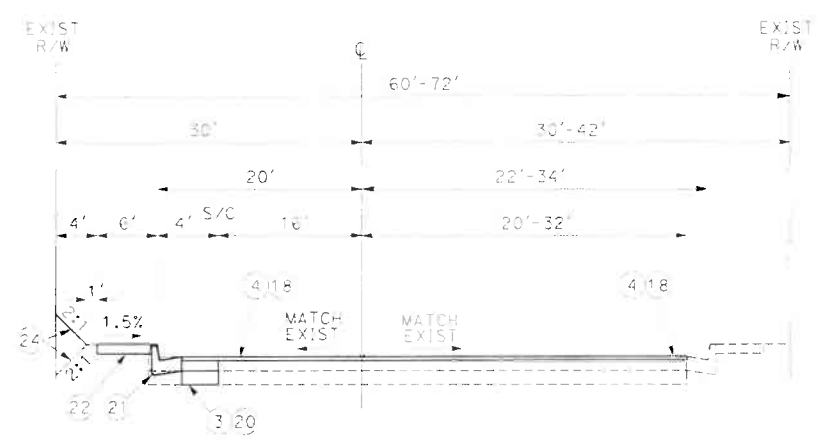

EL TORO RD

STA 17+76 TO STA 26+65
NTS

CONSTRUCTION NOTES:

1. PROTECT IN PLACE
2. MATCH EXISTING
3. SAWCUT AND REMOVE EXISTING ASPHALT CONCRETE PAVEMENT, BASE, ASPHALT DIKE, AND UNDERLYING MATERIAL TO A DEPTH OF 1.13'; SCARIFY SUBGRADE, MOISTURE CONDITION, GRADE, AND COMPACT TO 95% PER DETAIL ON SHEET C-1
4. COLD PLANE EXISTING ASPHALT CONCRETE TO A DEPTH OF 0.15' AND REMOVE GRINDINGS
5. REMOVE TREE/VEGETATION, INCLUDING STUMPS TO A DEPTH OF 6' MIN
6. REMOVE EXISTING HARDSCAPE AND REPLACE IN KIND
7. ADJUST PULLBOX/PEDESTAL TO GRADE BY FRONTIER
8. ADJUST WATER METER/VALVE/BLOWOFF TO GRADE BY EVMWD
9. ADJUST PULLBOX/PEDESTAL TO GRADE BY CHARTER
10. RELOCATE CONFLICTING PULLBOX BY CHARTER
11. RELOCATE EXISTING FIRE HYDRANT AND BOLLARDS BEHIND CURB BY EVMWD
12. RELOCATE CONFLICTING PULLBOX BY FRONTIER
13. ADJUST PULLBOX/MANHOLE TO GRADE BY SCE
14. REMOVE AND RELOCATE/RECONSTRUCT FENCE/GATE TO R/W LINE AS DIRECTED BY THE ENGINEER
15. RELOCATE OR RESET MAILBOX PER USPS STANDARDS
16. REMOVE, RELOCATE, OR PROTECT SIGN PER PD SHEETS
17. REMOVE AND REPLACE EXISTING CONCRETE CROSS GUTTER AND SPANDREL PER STD No. 209
18. CONSTRUCT 0.15 RHMA TYPE G PG64-16, ½" MIX
19. REMOVE DRIVEWAY APPROACH AND CONSTRUCT NEW DRIVEWAY APPROACH PER STD No. 207, AND TIE-IN AT R/W. TIE-IN MATERIAL SHALL MATCH EXISTING DRIVEWAY MATERIAL UNLESS OTHERWISE SPECIFIED ON PLAN
19M. CONSTRUCT MODIFIED DRIVEWAY RETAINING CURB AND COUNTER SLOPE TIE-IN PER DETAIL ON SHEET C-1
20. CONSTRUCT 0.35 HMA TYPE A PG64-16, ½" MIX OVER 0.65' CLASS 2 AB
21. CONSTRUCT TYPE A-6 CURB AND GUTTER PER STD No. 200
22. CONSTRUCT SIDEWALK PER STD No. 401, INCLUDE REMOVALS OF EXISTING HARDSCAPE AND TIE-IN TO EXISTING WALKWAYS
23. CONSTRUCT 6"-24" RETAINING CURB MONOLITHIC WITH SIDEWALK PER DETAILS ON SHEET C-1. TAPER DOWN TO 0" HEIGHT OVER 4' PER DETAIL ON SHEET C-1 AT DRIVEWAY EDGES AND BEGIN/END CALLOUTS
24. GRADE BEHIND SIDEWALK 2:1 SLOPE OR FLATTER PER DETAIL ON SHEET C-1
25. SAWCUT AND REMOVE CURB RAMP AND RECONSTRUCT CURB RAMP PER STD No. 403 CASE A AND SHEETS C-2 THRU C-4
26. CONSTRUCT CURB RAMP CASE B PER STD No. 403 AND CURB RAMP DETAIL SHEETS. INCLUDE REMOVAL OF EXISTING CONCRETE CURB OR AC DIKE
27. CONSTRUCT CURB RAMP CASE CM PER CALTRANS STD A88B AND CURB RAMP DETAIL SHEETS
28. CONSTRUCT NEW CURB INLET CATCH BASIN PER STD No. 300
29. CONSTRUCT NEW COMBINATION INLET CATCH BASIN PER STD No. 301
30. CONSTRUCT 18" CMP AND TIE INTO EXIST CULVERT PER RCFC STD JUNCTION STRUCTURE No. 2 AND DETAIL ON SHEET C-1
31. REMOVE EXISTING GRATE AND TOP OF CATCH BASIN TO A DEPTH OF 6" BELOW FLOWLINE. CONSTRUCT NEW TOP OF COMBINATION INLET CATCH BASIN PER STD No. 302, AND TIE INTO EXISTING BOX BY DOWEL RODS
32. CONSTRUCT CHAIN LINK FENCE, ANCHOR POSTS IN RETAINING CURB PER CALTRANS STD B11-7
33. PLACE 4'x3' YELLOW DETECTABLE WARNING SURFACE
34. CONSTRUCT 6" AC DIKE PER STD No. 212
35. RELOCATE EXISTING GUY POLE BEHIND CURB BY SCE
36. CONSTRUCT TYPE 8A CASE 1, H=4', PER CALTRANS STD B3-7A
37. CONSTRUCT DRIVEWAY APPROACH PER STD No. 207A MODIFIED

ISSUED BY ADDENDUM No. 1, ATTACHMENT "B"

TRANSPORTATION DEPARTMENT	TYPICAL SECTIONS	SHEET No.
DESIGNED BY: BRETT CRAIG, SENIOR CIVIL ENGINEER, COUNTY OF RIVERSIDE — 2-8-2022 DATE	EL TORO RD/DEXTER AVE SIDEWALK PROJECT NO SCALE	X-1 SHEET 2 OF 21

WO D0-0014 COUNTY FILE No. 970-UU

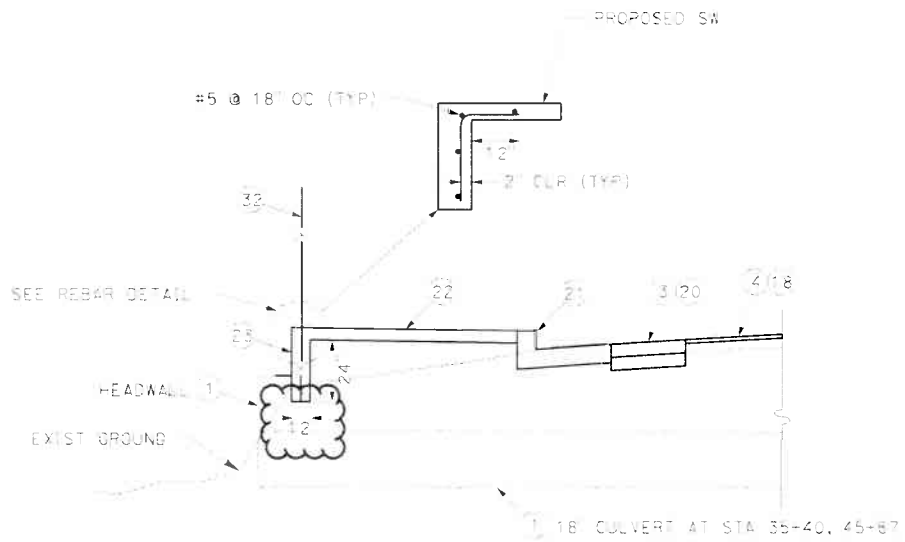

RETAINING CURB DETAIL AT FILL LOCATIONS
NTS

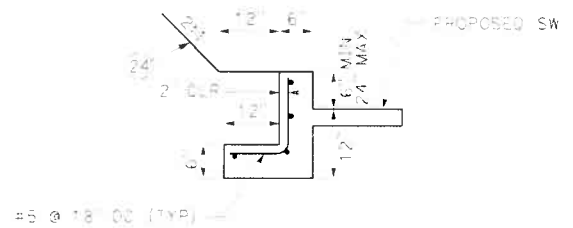

RETAINING CURB DETAIL AT CUT LOCATIONS
NTS

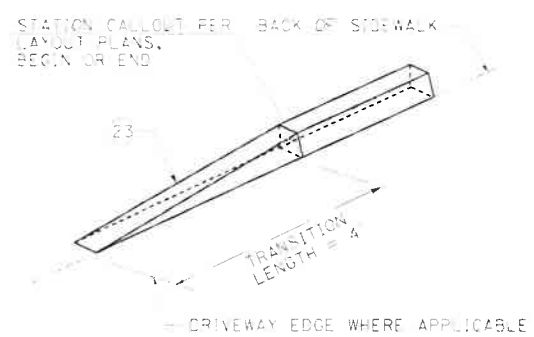

BEGIN/END RETAINING CURB
NTS

VERTICAL PLACEMENT **HORIZONTAL PLACEMENT**

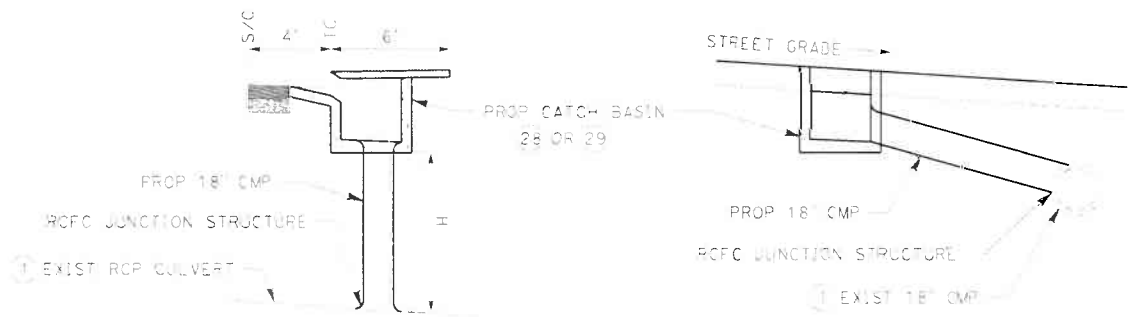

CULVERT TIE-IN DETAIL
NTS

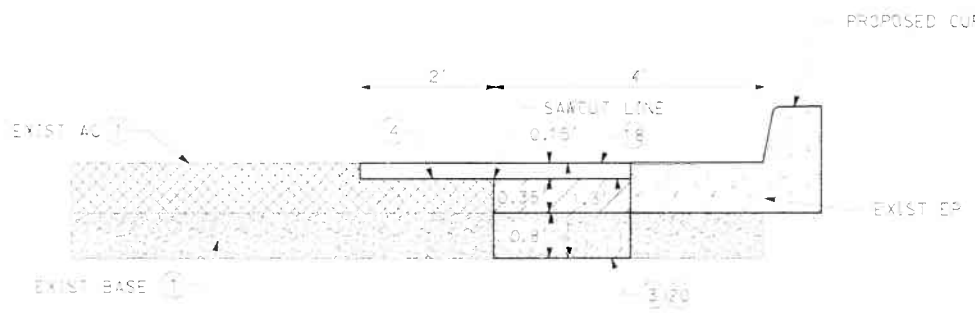

SAWCUT DETAIL
NTS

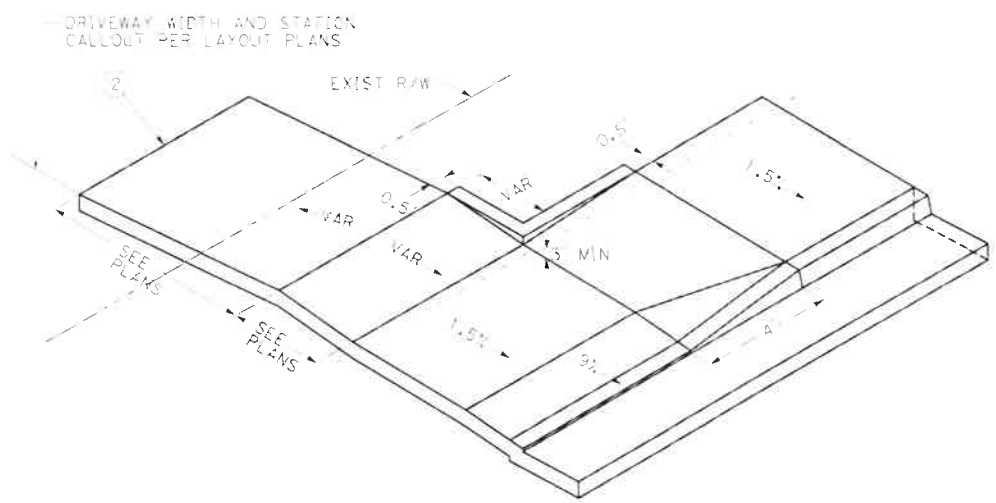

MODIFIED DRIVEWAY RETAINING CURB AND COUNTER SLOPE TIE-IN DETAIL
NTS

CONSTRUCTION NOTES:

1. PROTECT IN PLACE
2. MATCH EXISTING
3. SAWCUT AND REMOVE EXISTING ASPHALT CONCRETE PAVEMENT, BASE, ASPHALT DIKE, AND UNDERLYING MATERIAL TO A DEPTH OF 1.5'; SCARIFY SUBGRADE, MOISTURE CONDITION, GRADE, AND COMPACT TO 95% PER DETAIL ON SHEET C-1
4. COLD PLANE EXISTING ASPHALT CONCRETE TO A DEPTH OF 0.15' AND REMOVE GRINDINGS
5. REMOVE TREE/VEGETATION, INCLUDING STUMPS TO A DEPTH OF 6" MIN
6. REMOVE EXISTING HARDSCAPE AND REPLACE IN KIND
7. ADJUST PULLBOX/PEDESTAL TO GRADE BY FRONTIER
8. ADJUST WATER METER/VALVE/BLOWOFF TO GRADE BY EVMWD
9. ADJUST PULLBOX/PEDESTAL TO GRADE BY CHARTER
10. RELOCATE CONFLICTING PULLBOX BY CHARTER
11. RELOCATE EXISTING FIRE HYDRANT AND BOLLARDS BEHIND CURB BY EVMWD
12. RELOCATE CONFLICTING PULLBOX BY FRONTIER
13. ADJUST PULLBOX/MANHOLE TO GRADE BY SCE
14. REMOVE AND RELOCATE/RECONSTRUCT FENCE/GATE TO R/W LINE AS DIRECTED BY THE ENGINEER
15. RELOCATE OR RESET MAILBOX PER USPS STANDARDS
16. REMOVE, RELOCATE, OR PROTECT SIGN PER PD SHEETS
17. REMOVE AND REPLACE EXISTING CONCRETE CROSS GUTTER AND SPANDREL PER STD No. 209
18. CONSTRUCT 0.15 RHMA TYPE G PG64-16, ½" MIX
19. REMOVE DRIVEWAY APPROACH AND CONSTRUCT NEW DRIVEWAY APPROACH PER STD No. 207, AND TIE-IN AT R/W. TIE-IN MATERIAL SHALL MATCH EXISTING DRIVEWAY MATERIAL UNLESS OTHERWISE SPECIFIED ON PLAN
19M. CONSTRUCT MODIFIED DRIVEWAY RETAINING CURB AND COUNTER SLOPE TIE-IN PER DETAIL ON SHEET C-1
20. CONSTRUCT 0.35' HMA TYPE A PG64-10, ½" MIX OVER 0.8' CLASS II AB
21. CONSTRUCT TYPE A-6 CURB AND GUTTER PER STD No. 200
22. CONSTRUCT SIDEWALK PER STD No. 401, INCLUDE REMOVALS OF EXISTING HARDSCAPE AND TIE-IN TO EXISTING WALKWAYS
23. CONSTRUCT 6"-24" RETAINING CURB MONOLITHIC WITH SIDEWALK PER DETAILS ON SHEET C-1. TAPER DOWN TO 0" HEIGHT OVER 4' PER DETAIL ON SHEET C-1 AT DRIVEWAY EDGES AND BEGIN/END CALLOUTS
24. GRADE BEHIND SIDEWALK 2:1 SLOPE OR FLATTER PER DETAIL ON SHEET C-1
25. SAWCUT AND REMOVE CURB RAMP AND RECONSTRUCT CURB RAMP PER STD No. 403 CASE A AND SHEETS C-2 THRU C-4
26. CONSTRUCT CURB RAMP CASE B PER STD No. 403 AND CURB RAMP DETAIL SHEETS. INCLUDE REMOVAL OF EXISTING CONCRETE CURB OR AC DIKE
27. CONSTRUCT CURB RAMP CASE CM PER CALTRANS STD 488B AND CURB RAMP DETAIL SHEETS
28. CONSTRUCT NEW CURB INLET CATCH BASIN PER STD No. 302
29. CONSTRUCT NEW COMBINATION INLET CATCH BASIN PER STD No. 301
30. CONSTRUCT 18" CMP AND TIE INTO EXIST CULVERT PER RCFC STD JUNCTION STRUCTURE No. 2 AND DETAIL ON SHEET C-1
31. REMOVE EXISTING GRATE AND TOP OF CATCH BASIN TO A DEPTH OF 6" BELOW FLOWLINE. CONSTRUCT NEW TOP OF COMBINATION INLET CATCH BASIN PER STD No. 302, AND TIE INTO EXIST BOX BY OTHER FORCE
32. CONSTRUCT CHAIN LINK FENCE. ANCHOR POSTS IN RETAINING CURB PER CALTRANS STD B11-57
33. PLACE 4'x3' YELLOW DETECTABLE WARNING SURFACE
34. CONSTRUCT 6" AC DIKE PER STD No. 212
35. RELOCATE EXISTING GUY POLE BEHIND CURB BY SCE
36. CONSTRUCT TYPE 6A CASE 1, H=4', PER CALTRANS STD B3-74
37. CONSTRUCT DRIVEWAY APPROACH PER STD No. 207A MODIFIED

ISSUED BY ADDENDUM No. 1, ATTACHMENT "B"

TRANSPORTATION DEPARTMENT	CONSTRUCTION DETAILS	SHEET No.
DESIGNED BY: BRETT CRAIG, 84176 — BRETT CRAIG, SENIOR CIVIL ENGINEER, COUNTY OF RIVERSIDE — 2-8-2022 DATE	EL TORO RD/DEXTER AVE SIDEWALK PROJECT NO SCALE	C-1 SHEET 3 OF 21

USERNAME => DGN FILE => WO 00-0014 COUNTY FILE No. 970-UU

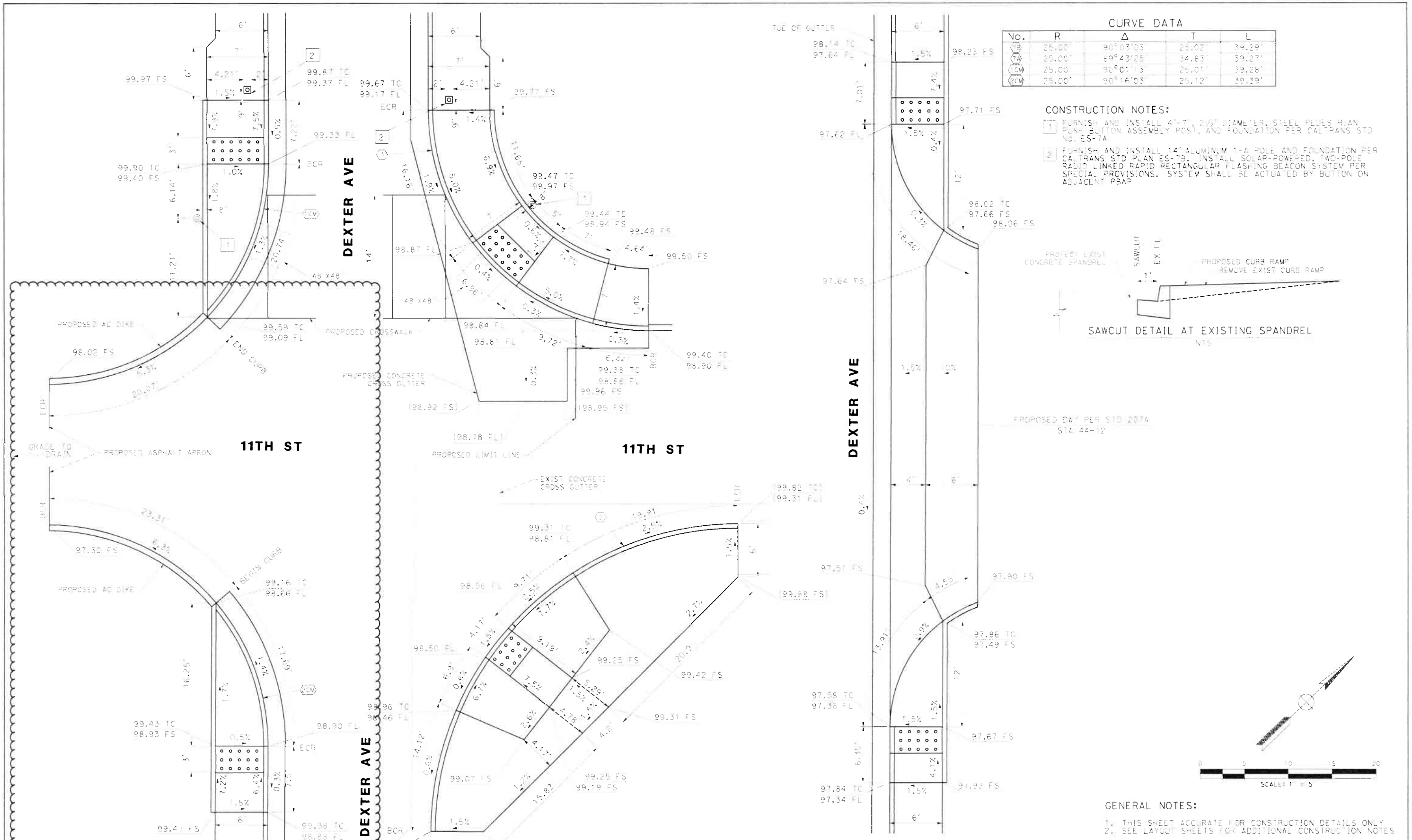

CURVE DATA

No.	R	Δ	T	L
3	25.00'	90°03'03"	25.02'	39.29'
7A	25.00'	89°43'25"	34.83'	39.27'
12CM	25.00'	90°01'15"	25.01'	39.28'
22CM	25.00'	90°16'03"	25.12'	39.39'

CONSTRUCTION NOTES:

1. FURNISH AND INSTALL 4'-7", 2 1/2" DIAMETER, STEEL PEDESTRIAN PUSH BUTTON ASSEMBLY POST, AND FOUNDATION PER CALTRANS STD NO. ES-7A
2. FURNISH AND INSTALL 14' ALUMINUM 1-A POLE AND FOUNDATION PER CALTRANS STD PLAN ES-7B. INSTALL SOLAR-POWERED, TWO-POLE RADIO LINKED RAPID RECTANGULAR FLASHING BEACON SYSTEM PER SPECIAL PROVISIONS. SYSTEM SHALL BE ACTUATED BY BUTTON ON ADJACENT PRAP

GENERAL NOTES:

1. THIS SHEET ACCURATE FOR CONSTRUCTION DETAILS ONLY.
2. SEE LAYOUT SHEETS FOR ADDITIONAL CONSTRUCTION NOTES.

TRANSPORTATION DEPARTMENT	CONSTRUCTION DETAILS	SHEET No.
DESIGNED BY: BRETT CRAIG 64776 — BRETT CRAIG, SENIOR CIVIL ENGINEER, COUNTY OF RIVERSIDE — 2-8-2022 DATE	EL TORO RD/DEXTER AVE SIDEWALK PROJECT NO SCALE	C-4 SHEET 6 OF 21

USERNAME => DGN FILE => WO: DO-0014 COUNTY FILE No. 970-UU

ISSUED BY ADDENDUM No. 1, ATTACHMENT "B"

DATE PLOTTED => 00/00/00 TIME PLOTTED => 00:00:00

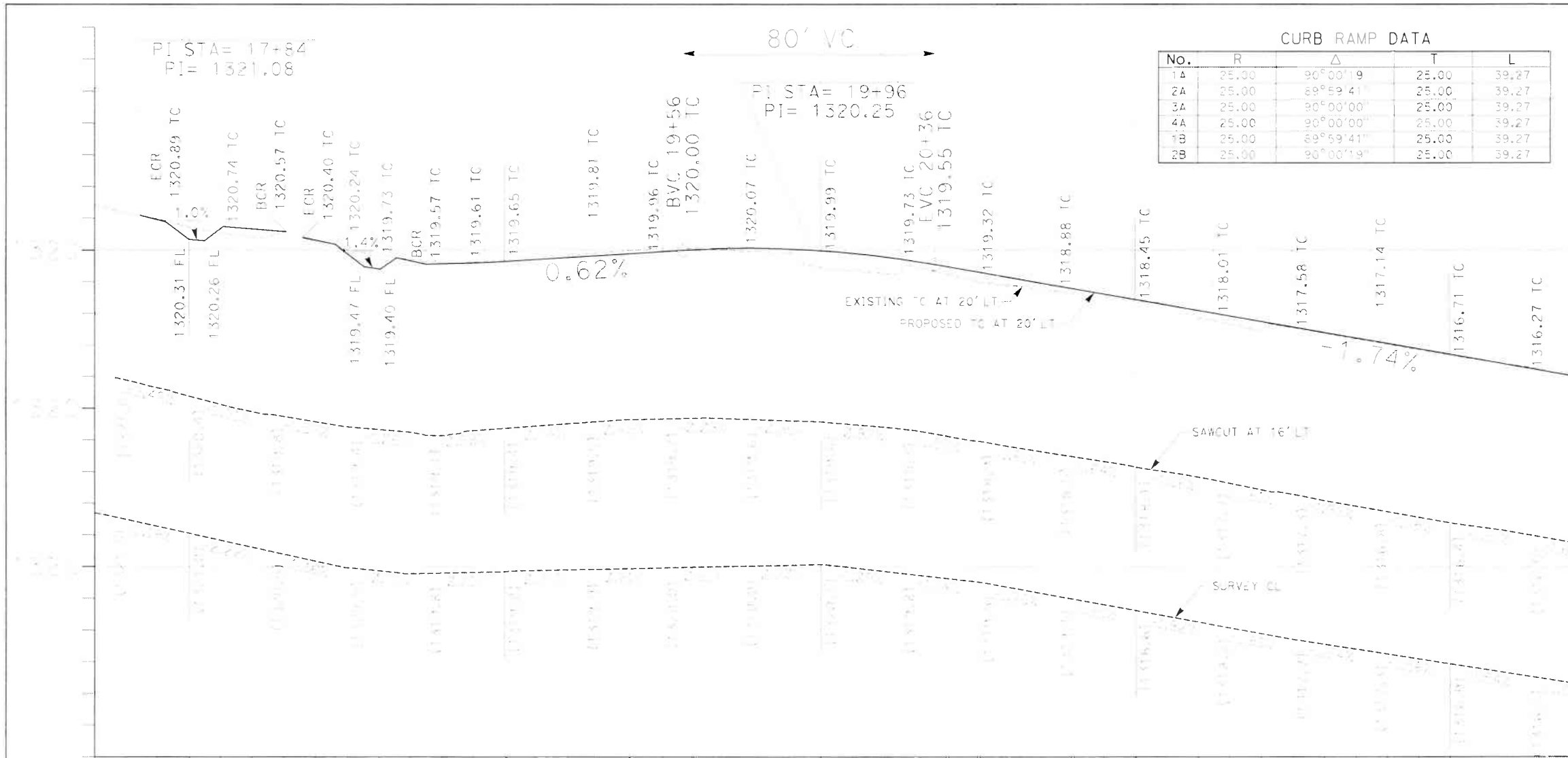

CURB RAMP DATA

No.	R	Δ	T	L
1A	25.00	90°00'19"	25.00	39.27
2A	25.00	89°59'41"	25.00	39.27
3A	25.00	90°00'00"	25.00	39.27
4A	25.00	90°00'00"	25.00	39.27
1B	25.00	89°59'41"	25.00	39.27
2B	25.00	90°00'19"	25.00	39.27

CONSTRUCTION NOTES:

1. PROTECT IN PLACE
2. MATCH EXISTING
3. SAWCUT AND REMOVE EXISTING ASPHALT CONCRETE PAVEMENT, BASE, ASPHALT DIKE, AND UNDERLYING MATERIAL TO A DEPTH OF 1.33'; SCARIFY SUBGRADE, MOISTURE CONDITION, GRADE, AND COMPACT TO 95% PER DETAIL ON SHEET C-1
4. COLD PLANE EXISTING ASPHALT CONCRETE TO A DEPTH OF 0.15' AND REMOVE GRINDINGS
5. REMOVE TREE/VEGETATION, INCLUDING STUMPS TO A DEPTH OF 6" MIN
6. REMOVE EXISTING HARDSCAPE AND REPLACE IN KIND
7. ADJUST PULLBOX/PEDESTAL TO GRADE BY FRONTIER
8. ADJUST WATER METER/VALVE/BLOWOFF TO GRADE BY EVMWD
9. ADJUST PULLBOX/PEDESTAL TO GRADE BY CHARTER
10. RELOCATE CONFLICTING PULLBOX BY CHARTER
11. RELOCATE EXISTING FIRE HYDRANT AND BOLLARDS BEHIND CURB BY EVMWD
12. RELOCATE CONFLICTING PULLBOX BY FRONTIER
13. ADJUST PULLBOX/MANHOLE TO GRADE BY SCE
14. REMOVE AND RELOCATE/RECONSTRUCT FENCE/GATE TO R/W LINE AS DIRECTED BY THE ENGINEER
15. RELOCATE OR RESET MAILBOX PER USPS STANDARDS
16. REMOVE, RELOCATE, OR PROTECT SIGN PER PD SHEETS
17. REMOVE AND REPLACE EXISTING CONCRETE CROSS GUTTER AND SPANDREL PER STD No. 209
18. CONSTRUCT 0.15' RHMA TYPE G PG64-16, ½" MIX
19. REMOVE DRIVEWAY APPROACH AND CONSTRUCT NEW DRIVEWAY APPROACH PER STD No. 207, AND TIE-IN AT R/W. TIE-IN MATERIAL SHALL MATCH EXISTING DRIVEWAY MATERIAL UNLESS OTHERWISE SPECIFIED ON PLAN
19M. CONSTRUCT MODIFIED DRIVEWAY RETAINING CURB AND COUNTER SLOPE TIE-IN PER DETAIL ON SHEET C-1
20. CONSTRUCT 0.35' HMA TYPE A PG64-10, 1" MIX OVER 0.8' CLASS II AB
21. CONSTRUCT TYPE A-6 CURB AND GUTTER PER STD No. 200
22. CONSTRUCT SIDEWALK PER STD No. 401, INCLUDE REMOVALS OF EXISTING HARDSCAPE AND TIE-IN TO EXISTING WALKWAYS
23. CONSTRUCT 6"-24" RETAINING CURB MONOLITHIC WITH SIDEWALK PER DETAILS ON SHEET C-1. TAPER DOWN TO 0" HEIGHT OVER 4' PER DETAIL ON SHEET C-1 AT DRIVEWAY EDGES AND BEGIN/END CALLOUTS
24. GRADE BEHIND SIDEWALK 2% SLOPE OR FLATTER PER DETAIL ON SHEET C-1
25. SAWCUT AND REMOVE CURB RAMP AND RECONSTRUCT CURB RAMP PER STD No. 403 CASE A AND SHEETS C-2 THRU C-4
26. CONSTRUCT CURB RAMP CASE B PER STD No. 403 AND CURB RAMP DETAIL SHEETS. INCLUDE REMOVAL OF EXISTING CONCRETE CURB OR AC DIKE
27. CONSTRUCT CURB RAMP CASE CM PER CALTRANS STD A88B AND CURB RAMP DETAIL SHEETS
28. CONSTRUCT NEW CURB INLET CATCH BASIN PER STD No. 300
29. CONSTRUCT NEW COMBINATION INLET CATCH BASIN PER STD No. 301
30. CONSTRUCT 18" CMP AND TIE INTO EXISTING CULVERT PER RCFC STD JUNCTION STRUCTURE No. 2 AND DETAIL ON SHEET C-1
31. REMOVE EXISTING GRATE AND TOP OF CATCH BASIN TO A DEPTH OF 6" BELOW FLOWLINE. CONSTRUCT NEW TOP OF COMBINATION INLET CATCH BASIN PER STD No. 302, AND TIE INTO EXISTING RCP BY DOWEL RODS
32. CONSTRUCT 6" CONCRETE RETAINING CURB PER CALTRANS STD S11-7
33. PLACE 4'x8' YELLOW DETECTABLE WARNING SURFACE
34. CONSTRUCT 6" AC DIKE PER STD No. 212
35. RELOCATE EXISTING GUY POLE BEHIND CURB BY SCE
36. CONSTRUCT TYPE B4 CASE 1, H=4', PER CALTRANS STD B3-7A
37. CONSTRUCT DRIVEWAY APPROACH PER STD No. 207A MODIFIED

MATCH LINE 22+40 SEE SHEET C-2

SCALE: 1" = 20'

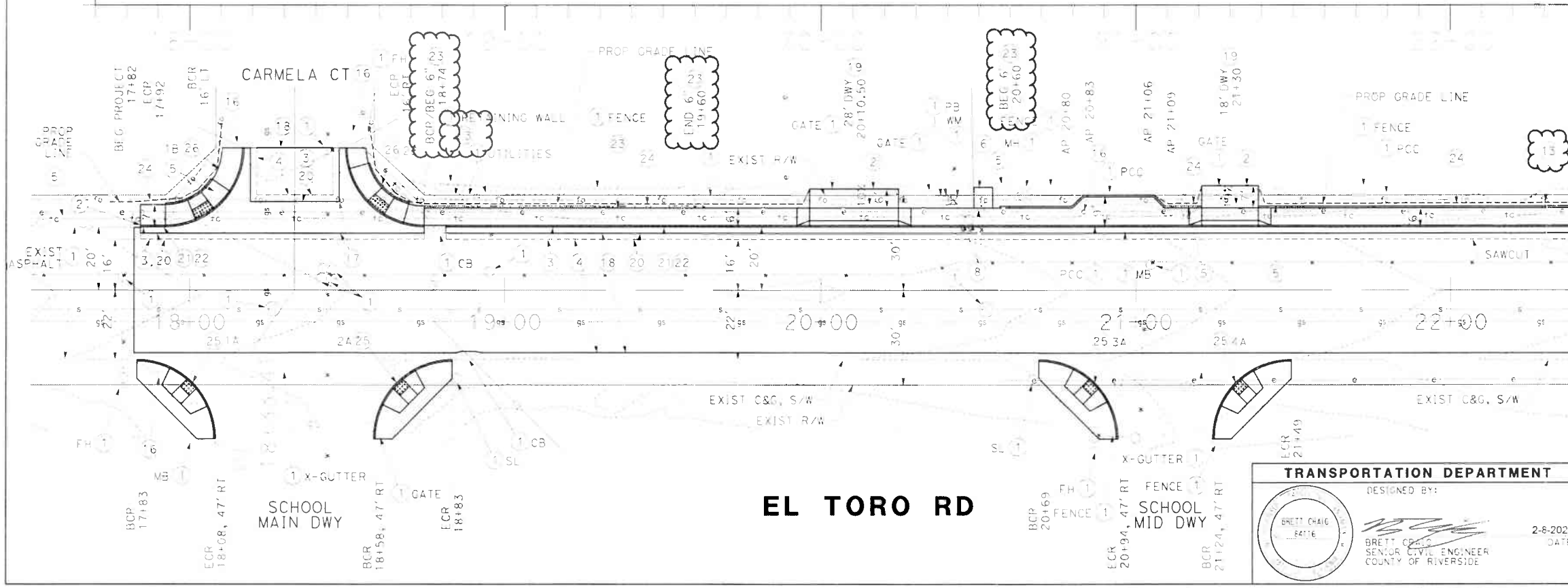

TRANSPORTATION DEPARTMENT	LAYOUT	SHEET No.
DESIGNED BY: BRETT CHAIG BATTIE — BRETT CHAIG, SENIOR CIVIL ENGINEER, COUNTY OF RIVERSIDE — 2-8-2022 DATE	EL TORO RD/DEXTER AVE SIDEWALK PROJECT STA 17+82 TO STA 22+40	L-1 SHEET 7 OF 21

USERNAME => DGN FILE => WO D0-0014 COUNTY FILE No. 970-UU

ISSUED BY ADDENDUM No. 1, ATTACHMENT "B"

DATE PLOTTED => TIME PLOTTED => 00-00-00

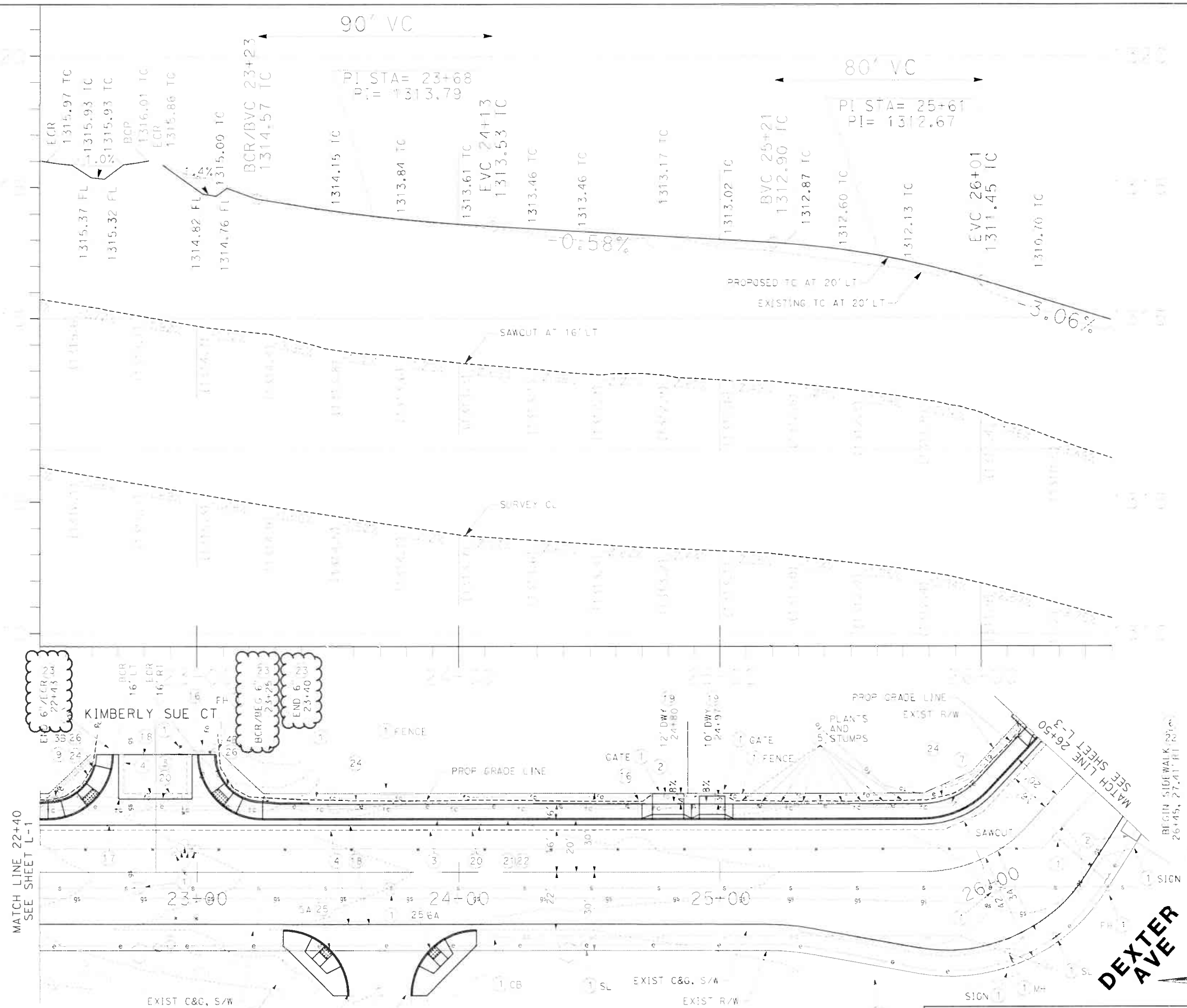

CONSTRUCTION NOTES:

1. PROTECT IN PLACE
2. MATCH EXISTING
3. SAWCUT AND REMOVE EXISTING ASPHALT CONCRETE PAVEMENT, BASE, ASPHALT DIKE, AND UNDERLYING MATERIAL TO A DEPTH OF 1.5'; SCARIFY SUBGRADE, MOISTURE CONDITION, GRADE, AND COMPACT TO 95% PER DETAIL ON SHEET C-1
4. COLD PLANE EXISTING ASPHALT CONCRETE TO A DEPTH OF 0.15' AND REMOVE GRINDINGS
5. REMOVE TREE/VEGETATION, INCLUDING STUMPS TO A DEPTH OF 6' MIN
6. REMOVE EXISTING HARDSCAPE AND REPLACE IN KIND
7. ADJUST PULLBOX/PEDESTAL TO GRADE BY FRONTIER
8. ADJUST WATER METER/VALVE/BLOWOFF TO GRADE BY EVMWD
9. ADJUST PULLBOX/PEDESTAL TO GRADE BY CHARTER
10. RELOCATE CONFLICTING PULLBOX BY CHARTER
11. RELOCATE EXISTING FIRE HYDRANT AND BOLLARDS BEHIND CURB BY EVMWD
12. RELOCATE CONFLICTING PULLBOX BY FRONTIER
13. ADJUST PULLBOX/MANHOLE TO GRADE BY SCE
14. REMOVE AND RELOCATE/RECONSTRUCT FENCE/GATE TO R/W LINE AS DIRECTED BY THE ENGINEER
15. RELOCATE OR RESET MAILBOX PER USPS STANDARDS
16. REMOVE, RELOCATE, OR PROTECT SIGN PER PD SHEETS
17. REMOVE AND REPLACE EXISTING CONCRETE CROSS GUTTER AND SPANDREL PER STD No. 209
18. CONSTRUCT 0.15' RHMA TYPE G PG64-16, 1/2" MIX
19. REMOVE DRIVEWAY APPROACH AND CONSTRUCT NEW DRIVEWAY APPROACH PER STD No. 207, AND TIE-IN AT R/W. TIE-IN MATERIAL SHALL MATCH EXISTING DRIVEWAY MATERIAL UNLESS OTHERWISE SPECIFIED ON PLAN
19M. CONSTRUCT MODIFIED DRIVEWAY RETAINING CURB AND COUNTER SLOPE TIE-IN PER DETAIL ON SHEET C-1
20. CONSTRUCT 0.35' HMA TYPE A PG64-10, 1" MIX OVER 0.8' CLASS II AB
21. CONSTRUCT TYPE A-6 CURB AND GUTTER PER STD No. 200
22. CONSTRUCT SIDEWALK PER STD No. 401, INCLUDE REMOVALS OF EXISTING HARDSCAPE AND TIE-IN TO EXISTING WALKWAYS
23. CONSTRUCT 6"-24" RETAINING CURB MONOLITHIC WITH SIDEWALK PER DETAILS ON SHEET C-1. TAPER DOWN TO 0 HEIGHT OVER 4' PER DETAIL ON SHEET C-1 AT DRIVEWAY EDGES AND BEGIN/END CALLOUTS
24. GRADE BEHIND SIDEWALK 2:1 SLOPE OR FLATTER PER DETAIL ON SHEET C-1
25. SAWCUT AND REMOVE CURB RAMP AND RECONSTRUCT CURB RAMP PER STD No. 403 CASE A AND SHEETS C-2 THRU C-4
26. CONSTRUCT CURB RAMP CASE B PER STD No. 403 AND CURB RAMP DETAIL SHEETS. INCLUDE REMOVAL OF EXISTING CONCRETE CURB OR AC DIKE
27. CONSTRUCT CURB RAMP CASE CM PER CALTRANS STD A88B AND CURB RAMP DETAIL SHEETS
28. CONSTRUCT NEW CURB INLET CATCH BASIN PER STD No. 300
29. CONSTRUCT NEW COMBINATION INLET CATCH BASIN PER STD No. 301
30. CONSTRUCT 18" CMP AND TIE INTO EXIST CULVERT PER RCFC STD JUNCTION STRUCTURE No. 2 AND DETAIL ON SHEET C-1
31. REMOVE EXISTING GRATE AND TOP OF CATCH BASIN TO A DEPTH OF 6' BELOW FLOWLINE. CONSTRUCT NEW TOP OF COMBINATION INLET CATCH BASIN PER STD No. 302, AND TIE INTO EXISTING BOX BY COWP PODS
32. CONSTRUCT CHAIN LINK FENCE, ANCHOR POSTS IN RETAINING CURB PER CALTRANS STD A77A
33. PLACE 4'x3' YELLOW DETECTABLE WARNING SURFACE
34. CONSTRUCT 6" AC DIKE PER STD No. 212
35. RELOCATE EXISTING GUY POLE BEHIND CURB BY SCE
36. CONSTRUCT TYPE 6A CASE 1, H=4', PER CALTRANS STD B3-7A
37. CONSTRUCT DRIVEWAY APPROACH PER STD No. 207A MODIFIED

CURB RAMP DATA

No.	R	Δ	T	L
5A	25.00	90°00'00"	25.00	39.27
6A	25.00	90°00'00"	25.00	39.27
3B	25.00	89°59'22"	25.00	39.27
4B	25.00	90°00'38"	25.00	39.27

TRANSPORTATION DEPARTMENT	LAYOUT	SHEET No.
DESIGNED BY: BRETT CRAIG, SENIOR CIVIL ENGINEER, COUNTY OF RIVERSIDE — 2-8-2022 DATE	EL TORO RD/DEXTER AVE SIDEWALK PROJECT STA 22+40 TO STA 26+50	L-2 SHEET 8 OF 21

USERNAME => BRETTC
DGN FILE => CO DATA ROW DRAFT

WO 80-0074

COUNTY FILE No. 970-UU

DATE PLOTTED => 00/00/00
TIME PLOTTED => 00:00

ISSUED BY ADDENDUM No. 1, ATTACHMENT "B"

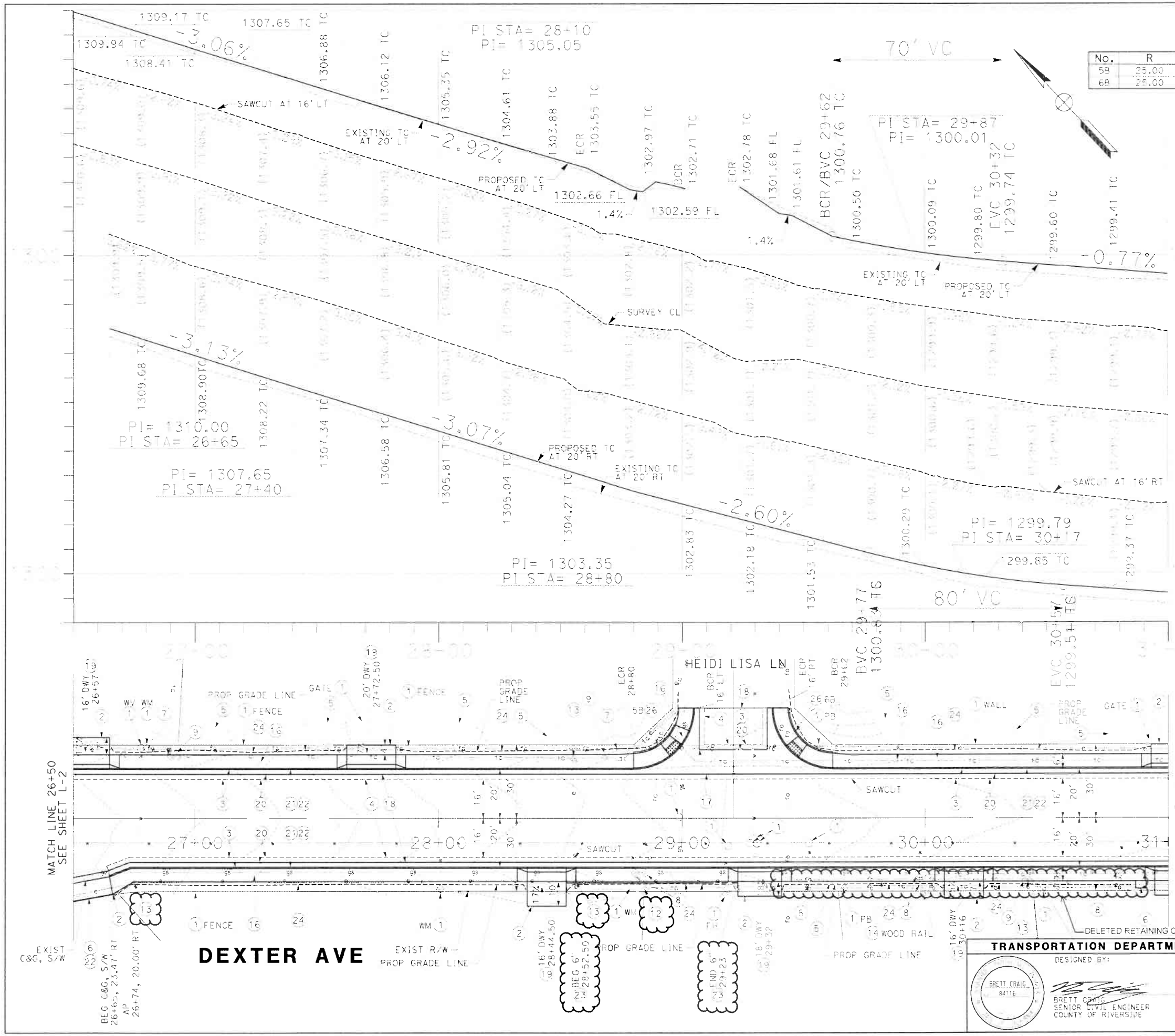

CURB RAMP DATA

No.	R	Δ	T	L
5B	25.00	89°59'59"	25.00	39.27
6B	25.00	90°00'01"	25.00	39.27

CONSTRUCTION NOTES:

1. PROTECT IN PLACE
2. MATCH EXISTING
3. SAWCUT AND REMOVE EXISTING ASPHALT CONCRETE PAVEMENT, BASE, ASPHALT DIKE, AND UNDERLYING MATERIAL TO A DEPTH OF 13"; SCARIFY SUBGRADE, MOISTURE CONDITION, GRADE, AND COMPACT TO 95% PER DETAIL ON SHEET C-1
4. COLD PLANE EXISTING ASPHALT CONCRETE TO A DEPTH OF 0.15' AND REMOVE GRINDINGS
5. REMOVE TREE/VEGETATION, INCLUDING STUMPS TO A DEPTH OF 6' MIN
6. REMOVE EXISTING HARDSCAPE AND REPLACE IN KIND
7. ADJUST PULLBOX/PEDESTAL TO GRADE BY FRONTIER
8. ADJUST WATER METER/VALVE/BLOWOFF TO GRADE BY EVMWD
9. ADJUST PULLBOX/PEDESTAL TO GRADE BY CHARTER
10. RELOCATE CONFLICTING PULLBOX BY CHARTER
11. RELOCATE EXISTING FIRE HYDRANT AND BOLLARDS BEHIND CURB BY EVMWD
12. RELOCATE CONFLICTING PULLBOX BY FRONTIER
13. ADJUST PULLBOX/MANHOLE TO GRADE BY SCE
14. REMOVE AND RELOCATE/RECONSTRUCT FENCE/GATE TO R/W LINE AS DIRECTED BY THE ENGINEER
15. RELOCATE OR RESET MAILBOX PER USPS STANDARDS
16. REMOVE, RELOCATE, OR PROTECT SIGN PER PD SHEETS
17. REMOVE AND REPLACE EXISTING CONCRETE CROSS GUTTER AND SPANDREL PER STD No. 209
18. CONSTRUCT 0.15 RHMA TYPE G PG64-16, ½" MIX
19. REMOVE DRIVEWAY APPROACH AND CONSTRUCT NEW DRIVEWAY APPROACH PER STD No. 207, AND TIE-IN AT R/W. TIE-IN MATERIAL SHALL MATCH EXISTING DRIVEWAY MATERIAL UNLESS OTHERWISE SPECIFIED ON PLAN
19M. CONSTRUCT MODIFIED DRIVEWAY RETAINING CURB AND COUNTER SLOPE TIE-IN PER DETAIL ON SHEET C-1
20. CONSTRUCT 0.35' HMA TYPE A PG64-10, 1" MIX OVER 0.9' CLASS II AB
21. CONSTRUCT TYPE A-6 CURB AND GUTTER PER STD No. 200
22. CONSTRUCT SIDEWALK PER STD No. 401, INCLUDE REMOVALS OF EXISTING HARDSCAPE AND TIE-IN TO EXISTING WALKWAYS
23. CONSTRUCT 6'-24" RETAINING CURB MONOLITHIC WITH SIDEWALK PER DETAILS ON SHEET C-1. TAPER DOWN TO 0 HEIGHT OVER 4' PER DETAIL ON SHEET C-1 AT DRIVEWAY EDGES AND BEGIN/END CALLOUTS
24. GRADE BEHIND SIDEWALK 2:1 SLOPE OR FLATTER PER DETAIL ON SHEET C-1
25. SAWCUT AND REMOVE CURB RAMP AND RECONSTRUCT CURB RAMP PER STD No. 403 CASE A AND SHEETS C-2 THRU C-4
26. CONSTRUCT CURB RAMP CASE B PER STD No. 403 AND CURB RAMP DETAIL SHEETS. INCLUDE REMOVAL OF EXISTING CONCRETE CURB OR AC DIKE
27. CONSTRUCT CURB RAMP CASE CM PER CALTRANS STD A88B AND CURB RAMP DETAIL SHEETS
28. CONSTRUCT NEW CURB INLET CATCH BASIN PER STD No. 300
29. CONSTRUCT NEW COMBINATION INLET CATCH BASIN PER STD No. 301
30. CONSTRUCT 18" CMP AND TIE INTO EXIST CULVERT PER RCFC STD JUNCTION STRUCTURE No. 2 AND DETAIL ON SHEET C-1
31. REMOVE EXISTING GRATE AND TOP OF CATCH BASIN TO A DEPTH OF 6' BELOW FLOWLINE. CONSTRUCT NEW TOP OF COMBINATION INLET CATCH BASIN PER STD No. 302, AND TIE INTO EXISTING BOX BY DOWEL RODS
32. CONSTRUCT CHAIN LINK FENCE. ANCHOR POSTS IN RETAINING CURB PER CALTRANS STD B11-7
33. PLACE 4'X8' YELLOW DETECTABLE WARNING SURFACE
34. CONSTRUCT 6" AC DIKE PER STD No. 212
35. RELOCATE EXISTING GUY POLE BEHIND CURB BY SCE
36. CONSTRUCT TYPE 6A CASE 1, H=4', PER CALTRANS STD B3-7A
37. CONSTRUCT DRIVEWAY APPROACH PER STD No. 207A MODIFIED

0 20 40 60 80
SCALE: 1" = 20'

ISSUED BY ADDENDUM No. 1, ATTACHMENT "B"

TRANSPORTATION DEPARTMENT	LAYOUT	SHEET No.
DESIGNED BY: BRETT CRAIG R4116 — BRETT CRAIG, SENIOR CIVIL ENGINEER, COUNTY OF RIVERSIDE — 2-8-2022 DATE	EL TORO RD/DEXTER AVE SIDEWALK PROJECT STA 26+50 TO STA 31+00	L-3 SHEET 9 OF 21

USERNAME => DGN FILE => WO D0-0014 COUNTY FILE No. 970-UU

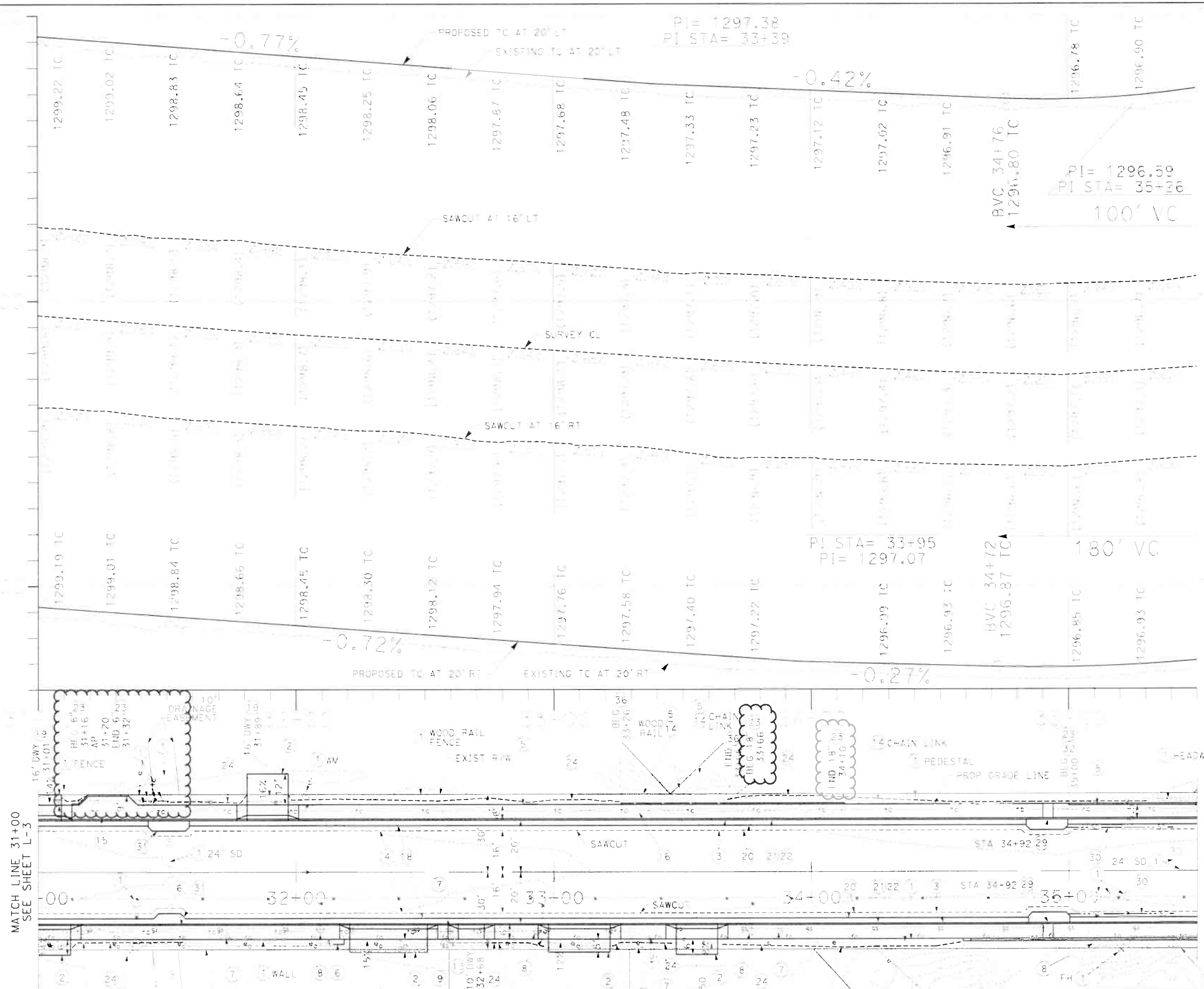

CONSTRUCTION NOTES:

1 PROTECT IN PLACE
2 MATCH EXISTING
3 SAWCUT AND REMOVE EXISTING ASPHALT CONCRETE PAVEMENT, BASE, ASPHALT DIKE, AND UNDERLYING MATERIAL TO A DEPTH OF 13"; SCARIFY SUBGRADE, MOISTURE CONDITION, GRADE, AND COMPACT TO 95% PER DETAIL ON SHEET C-1
4 COLD PLANE EXISTING ASPHALT CONCRETE TO A DEPTH OF 0.15' AND REMOVE GRINDINGS
5 REMOVE TREE/VEGETATION, INCLUDING STUMPS TO A DEPTH OF 6' MIN
6 REMOVE EXISTING HARDSCAPE AND REPLACE IN KIND
7 ADJUST PULLBOX/PEDESTAL TO GRADE BY FRONTIER
8 ADJUST WATER METER/VALVE/BLOWOFF TO GRADE BY EVMWD
9 ADJUST PULLBOX/PEDESTAL TO GRADE BY CHARTER
10 RELOCATE CONFLICTING PULLBOX BY CHARTER
11 RELOCATE EXISTING FIRE HYDRANT AND BOLLARDS BEHIND CURB BY EVMWD
12 RELOCATE CONFLICTING PULLBOX BY FRONTIER
13 ADJUST PULLBOX/MANHOLE TO GRADE BY SCE
14 REMOVE AND RELOCATE/RECONSTRUCT FENCE/GATE TO R/W LINE AS DIRECTED BY THE ENGINEER
15 RELOCATE OR RESET MAILBOX PER USPS STANDARDS
16 REMOVE, RELOCATE, OR PROTECT SIGN PER PD SHEETS
17 REMOVE AND REPLACE EXISTING CONCRETE CROSS GUTTER AND SPANDREL PER STD No. 209
18 CONSTRUCT 0.15 RHMA TYPE G PG64-16, ½" MIX
19 REMOVE DRIVEWAY APPROACH AND CONSTRUCT NEW DRIVEWAY APPROACH PER STD No. 207, AND TIE-IN AT R/W. TIE-IN MATERIAL SHALL MATCH EXISTING DRIVEWAY MATERIAL UNLESS OTHERWISE SPECIFIED ON PLAN
19M CONSTRUCT MODIFIED DRIVEWAY RETAINING CURB AND COUNTER SLOPE TIE-IN PER DETAIL ON SHEET C-1
20 CONSTRUCT 0.35' HMA TYPE A PG64-10, ½" MIX OVER 0.8' CLASS II AB
21 CONSTRUCT TYPE A-6 CURB AND GUTTER PER STD No. 200
22 CONSTRUCT SIDEWALK PER STD No. 401, INCLUDE REMOVALS OF EXISTING HARDSCAPE AND TIE-IN TO EXISTING WALKWAYS
23 CONSTRUCT 6-24" RETAINING CURB MONOLITHIC WITH SIDEWALK PER DETAILS ON SHEET C-1. TAPER DOWN TO 0' HEIGHT OVER 4' PER DETAIL ON SHEET C-1 AT DRIVEWAY EDGES AND BEGIN/END CALLOUTS
24 GRADE BEHIND SIDEWALK 2:1 SLOPE OR FLATTER PER DETAIL ON SHEET C-1
25 SAWCUT AND REMOVE CURB RAMP AND RECONSTRUCT CURB RAMP PER STD No. 403 CASE A AND SHEETS C-2 THRU C-4
26 CONSTRUCT CURB RAMP CASE B PER STD No. 403 AND CURB RAMP DETAIL SHEETS, INCLUDE REMOVAL OF EXISTING CONCRETE CURB OR AC DIKE
27 CONSTRUCT CURB RAMP CASE CM PER CALTRANS STD A88B AND CURB RAMP DETAIL SHEETS
28 CONSTRUCT NEW CURB INLET CATCH BASIN PER STD No. 300
29 CONSTRUCT NEW COMBINATION INLET CATCH BASIN PER STD No. 301
30 CONSTRUCT 18" CMP AND TIE INTO EXIST CULVERT PER RCFC STD JUNCTION STRUCTURE No. 2 AND DETAIL ON SHEET C-1
31 REMOVE EXISTING GRATE AND TOP OF CATCH BASIN TO A DEPTH OF 6' BELOW FLOWLINE. CONSTRUCT NEW TOP OF COMBINATION INLET CATCH BASIN PER STD No. 302, AND TIE IN TO EXISTING BOX BY POWER ROD
32 CONSTRUCT CHAIN LINK FENCE, ANCHOR POSTS IN RETAINING CURB PER CALTRANS STD B11-37
33 PLACE 4'x3' YELLOW DETECTABLE WARNING SURFACE
34 CONSTRUCT 6" AC DIKE PER STD No. 212
35 RELOCATE EXISTING GUY POLE BEHIND CURB BY SCE
36 CONSTRUCT TYPE 6A CASE 1, H=4', PER CALTRANS STD B3-74
37 CONSTRUCT DRIVEWAY APPROACH PER STD No. 207A MODIFIED

0 20 40 60 80
SCALE: 1" = 20'

ISSUED BY ADDENDUM No. 1, ATTACHMENT "B"

TRANSPORTATION DEPARTMENT	LAYOUT	SHEET No.
DESIGNED BY: BRETT CRAIG BATTE, SENIOR CIVIL ENGINEER, COUNTY OF RIVERSIDE — 2-8-2022 DATE	EL TORO RD/DEXTER AVE SIDEWALK PROJECT STA 31+00 TO STA 35+50	L-4 SHEET 10 OF 21

USERNAME => BRETTBATTE
DGN FILE => L-4.DGN

WO DO-0014 COUNTY FILE No. 970-UU

DATE PLOTTED
TIME PLOTTED
00:00:00

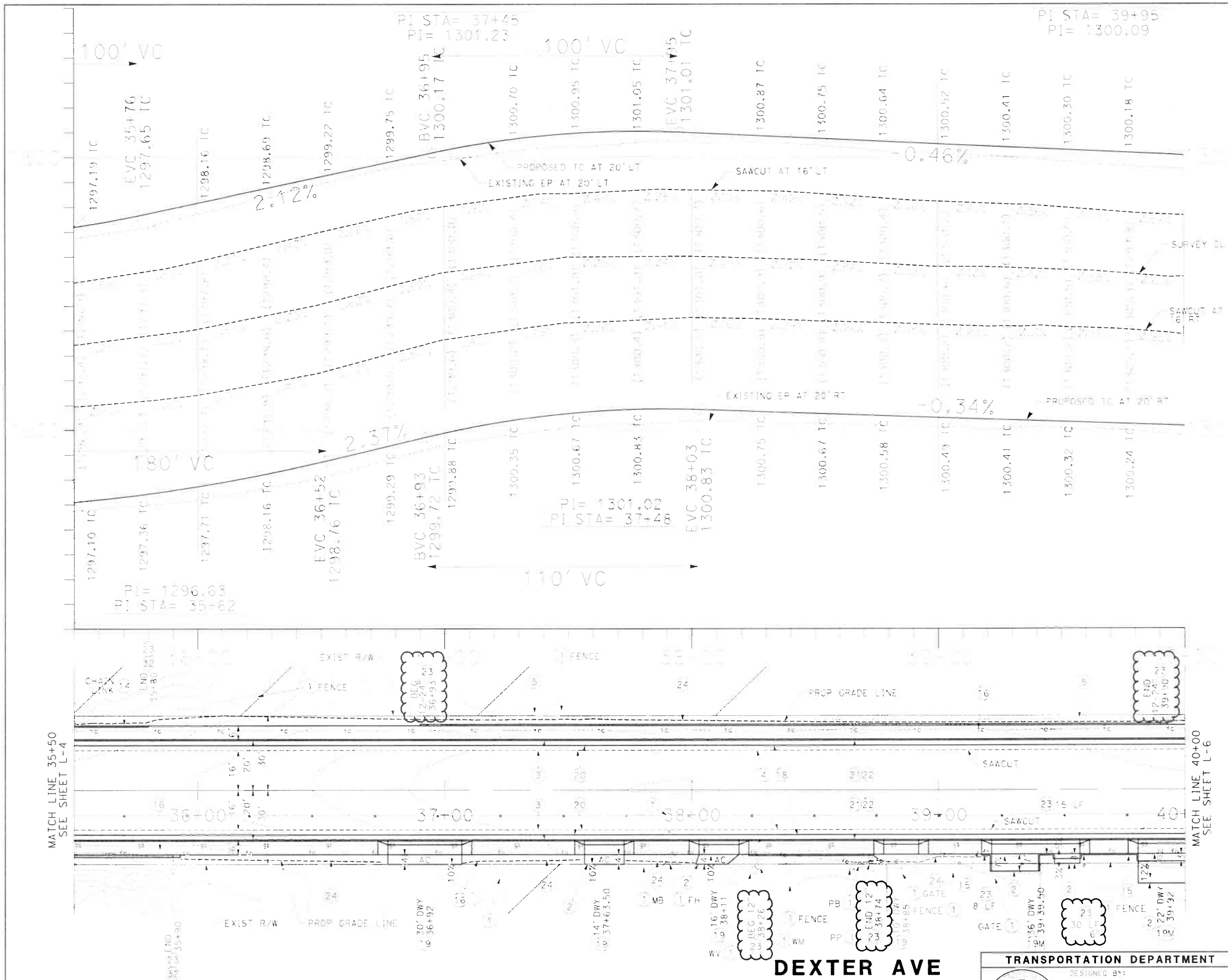

CONSTRUCTION NOTES:

1. PROTECT IN PLACE
2. MATCH EXISTING
3. SAWCUT AND REMOVE EXISTING ASPHALT CONCRETE PAVEMENT, BASE, ASPHALT DIKE, AND UNDERLYING MATERIAL TO A DEPTH OF 13", SCARIFY SUBGRADE, MOISTURE CONDITION, GRADE, AND COMPACT TO 95% PER DETAIL ON SHEET C-1
4. COLD PLANE EXISTING ASPHALT CONCRETE TO A DEPTH OF 0.15' AND REMOVE GRINDINGS
5. REMOVE TREE/VEGETATION, INCLUDING STUMPS TO A DEPTH OF 6' MIN
6. REMOVE EXISTING HARDSCAPE AND REPLACE IN KIND
7. ADJUST PULLBOX/PEDESTAL TO GRADE BY FRONTIER
8. ADJUST WATER METER/VALVE/BLOWOFF TO GRADE BY EVMWD
9. ADJUST PULLBOX/PEDESTAL TO GRADE BY CHARTER
10. RELOCATE CONFLICTING PULLBOX BY CHARTER
11. RELOCATE EXISTING FIRE HYDRANT AND BOLLARDS BEHIND CURB BY EVMWD
12. RELOCATE CONFLICTING PULLBOX BY FRONTIER
13. ADJUST PULLBOX/MANHOLE TO GRADE BY SCE
14. REMOVE AND RELOCATE/RECONSTRUCT FENCE/GATE TO R/W LINE AS DIRECTED BY THE ENGINEER
15. RELOCATE OR RESET MAILBOX PER USPS STANDARDS
16. REMOVE, RELOCATE, OR PROTECT SIGN PER PD SHEETS
17. REMOVE AND REPLACE EXISTING CONCRETE CROSS GUTTER AND SPANDREL PER STD No. 209
18. CONSTRUCT 0.15' RHMA TYPE G PG64-16, ½" MIX
19. REMOVE DRIVEWAY APPROACH AND CONSTRUCT NEW DRIVEWAY APPROACH PER STD No. 207, AND TIE-IN AT R/W. TIE-IN MATERIAL SHALL MATCH EXISTING DRIVEWAY MATERIAL UNLESS OTHERWISE SPECIFIED ON PLAN
19V. CONSTRUCT MODIFIED DRIVEWAY RETAINING CURB AND COUNTER SLOPE TIE-IN PER DETAIL ON SHEET C-1
20. CONSTRUCT 0.35' HMA TYPE A PG64-10, ½" MIX OVER 0.8' CLASS II AB
21. CONSTRUCT TYPE A-6 CURB AND GUTTER PER STD No. 200
22. CONSTRUCT SIDEWALK PER STD No. 401, INCLUDE REMOVALS OF EXISTING HARDSCAPE AND TIE-IN TO EXISTING WALKWAYS
23. CONSTRUCT 6"-24" RETAINING CURB MONOLITHIC WITH SIDEWALK PER DETAILS ON SHEET C-1, TAPER DOWN TO 0 HEIGHT OVER 4' PER DETAIL ON SHEET C-1 AT DRIVEWAY EDGES AND BEGIN/END CALLOUTS
24. GRADE BEHIND SIDEWALK 2:1 SLOPE OR FLATTER PER DETAIL ON SHEET C-1
25. SAWCUT AND REMOVE CURB RAMP AND RECONSTRUCT CURB RAMP PER STD No. 403 CASE A AND SHEETS C-2 THRU C-4
26. CONSTRUCT CURB RAMP CASE B PER STD No. 403 AND CURB RAMP DETAIL SHEETS. INCLUDE REMOVAL OF EXISTING CONCRETE CURB OR AC DIKE
27. CONSTRUCT CURB RAMP CASE CM PER CALTRANS STD A88B AND CURB RAMP DETAIL SHEETS
28. CONSTRUCT NEW CURB INLET CATCH BASIN PER STD No. 300
29. CONSTRUCT NEW COMBINATION INLET CATCH BASIN PER STD No. 301
30. CONSTRUCT 18" CMP AND TIE INTO EXIST CULVERT PER RCFC STD JUNCTION STRUCTURE No. 2 AND DETAIL ON SHEET C-1
31. REMOVE EXISTING GRATE AND TOP OF CATCH BASIN TO A DEPTH OF 6' BELOW FLOWLINE. CONSTRUCT NEW TOP OF COMBINATION INLET CATCH BASIN PER STD No. 302, AND TIE INTO EXISTING BOX BY DOWEL RODS
32. CONSTRUCT CHAIN LINK FENCE. ANCHOR POSTS IN RETAINING CURB PER STD No. 200 SHEET 2 OF 2
33. PLACE 4'x3' YELLOW DETECTABLE WARNING SURFACE
34. CONSTRUCT 6" AC DIKE PER STD No. 210
35. RELOCATE EXISTING GUY POLE BEHIND CURB BY SCE
36. CONSTRUCT TYPE 6A CASE 1, H=4', PER CALTRANS STD B3-7A
37. CONSTRUCT DRIVEWAY APPROACH PER STD No. 207A MODIFIED

0 20 40 60 80
SCALE: 1" = 20'

ISSUED BY ADDENDUM No. 1, ATTACHMENT "B"

TRANSPORTATION DEPARTMENT	LAYOUT	SHEET No.
DESIGNED BY: BRETT CRAIG R4116 — BRETT CRAIG, SENIOR CIVIL ENGINEER, COUNTY OF RIVERSIDE — 2-8-2022 DATE	EL TORO RD/DEXTER AVE SIDEWALK PROJECT STA 35+50 TO STA 40+00	L-5 SHEET 11 OF 21

USERNAME => DON FILE => WO DO-0014 COUNTY FILE No. 970-UU

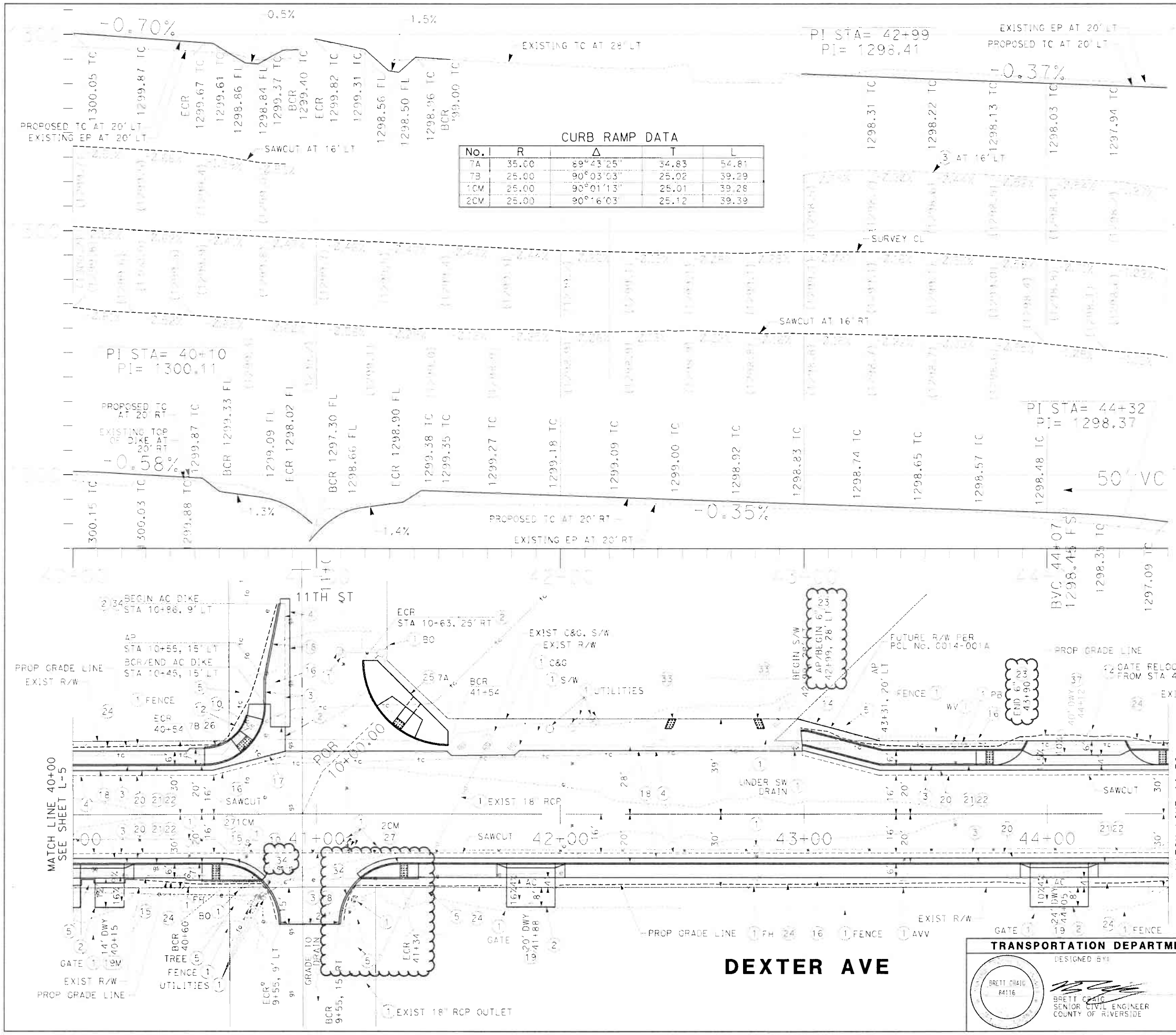

CURB RAMP DATA

No.	R	Δ	T	L
7A	35.00	89°43'25"	34.83	54.81
7B	25.00	90°03'03"	25.02	39.29
10M	25.00	90°01'13"	25.01	39.28
20M	25.00	90°16'03"	25.12	39.39

CONSTRUCTION NOTES:

1. PROTECT IN PLACE
2. MATCH EXISTING
3. SAWCUT AND REMOVE EXISTING ASPHALT CONCRETE PAVEMENT, BASE, ASPHALT DIKE, AND UNDERLYING MATERIAL TO A DEPTH OF 13". SCARIFY SUBGRADE, MOISTURE CONDITION, GRADE, AND COMPACT TO 95% PER DETAIL ON SHEET C-1
4. COLD PLANE EXISTING ASPHALT CONCRETE TO A DEPTH OF 0.15' AND REMOVE GRINDINGS
5. REMOVE TREE/VEGETATION, INCLUDING STUMPS TO A DEPTH OF 6' MIN
6. REMOVE EXISTING HARDSCAPE AND REPLACE IN KIND
7. ADJUST PULLBOX/PEDESTAL TO GRADE BY FRONTIER
8. ADJUST WATER METER/VALVE/BLOWOFF TO GRADE BY EVMWD
9. ADJUST PULLBOX/PEDESTAL TO GRADE BY CHARTER
10. RELOCATE CONFLICTING PULLBOX BY CHARTER
11. RELOCATE EXISTING FIRE HYDRANT AND BOLLARDS BEHIND CURB BY EVMWD
12. RELOCATE CONFLICTING PULLBOX BY FRONTIER
13. ADJUST PULLBOX/MANHOLE TO GRADE BY SCE
14. REMOVE AND RELOCATE/RECONSTRUCT FENCE/GATE TO R/W LINE AS DIRECTED BY THE ENGINEER
15. RELOCATE OR RESET MAILBOX PER USPS STANDARDS
16. REMOVE, RELOCATE, OR PROTECT SIGN PER PD SHEETS
17. REMOVE AND REPLACE EXISTING CONCRETE CROSS GUTTER AND SPANDREL PER STD No. 209
18. CONSTRUCT 0.15 RHMA TYPE G PG64-16, ½" MIX
19. REMOVE DRIVEWAY APPROACH AND CONSTRUCT NEW DRIVEWAY APPROACH PER STD No. 207, AND TIE-IN AT R/W. TIE-IN MATERIAL SHALL MATCH EXISTING DRIVEWAY MATERIAL UNLESS OTHERWISE SPECIFIED ON PLAN
19M. CONSTRUCT MODIFIED DRIVEWAY RETAINING CURB AND COUNTER SLOPE TIE-IN PER DETAIL ON SHEET C-1
20. CONSTRUCT 0.35' HMA TYPE A PG64-10, 1" MIX OVER 0.8' CLASS II AB
21. CONSTRUCT TYPE A-6 CURB AND GUTTER PER STD No. 200
22. CONSTRUCT SIDEWALK PER STD No. 401, INCLUDE REMOVALS OF EXISTING HARDSCAPE AND TIE-IN TO EXISTING WALKWAYS
23. CONSTRUCT 6'-24" RETAINING CURB MONOLITHIC WITH SIDEWALK PER DETAILS ON SHEET C-1. TAPER DOWN TO 0" HEIGHT OVER 4' PER DETAIL ON SHEET C-1 AT DRIVEWAY EDGES AND BEGIN/END CALLOUTS
24. GRADE BEHIND SIDEWALK 2:1 SLOPE OR FLATTER PER DETAIL ON SHEET C-1
25. SAWCUT AND REMOVE CURB RAMP AND RECONSTRUCT CURB RAMP PER STD No. 403 CASE A AND SHEETS C-2 THRU C-4
26. CONSTRUCT CURB RAMP CASE B PER STD No. 403 AND CURB RAMP DETAIL SHEETS. INCLUDE REMOVAL OF EXISTING CONCRETE CURB OR AC DIKE
27. CONSTRUCT CURB RAMP CASE CM PER CALTRANS STD A88B AND CURB RAMP DETAIL SHEETS
28. CONSTRUCT NEW CURB INLET CATCH BASIN PER STD No. 300
29. CONSTRUCT NEW COMBINATION INLET CATCH BASIN PER STD No. 301
30. CONSTRUCT 18" CMP AND TIE INTO EXIST CULVERT PER RCFC STD JUNCTION STRUCTURE No. 2 AND DETAIL ON SHEET C-1
31. REMOVE EXISTING GRATE AND TOP OF CATCH BASIN TO A DEPTH OF 6' BELOW FLOWLINE. CONSTRUCT NEW TOP OF COMBINATION INLET CATCH BASIN PER STD No. 302, AND TIE INTO EXISTING BOX BY OTHERS
32. CONSTRUCT CHAIN LINK FENCE. ANCHOR POSTS IN RETAINING CURB PER CALTRANS STD B11-7
33. PLACE 4'X5' YELLOW DETECTABLE WARNING SURFACE
34. CONSTRUCT 6" AC DIKE PER STD No. 212
35. RELOCATE EXISTING GUY POLE BEHIND CURB BY SCE
36. CONSTRUCT TYPE 6A CASE 1, H=4', PER CALTRANS STD B3-7A
37. CONSTRUCT DRIVEWAY APPROACH PER STD No. 207A MODIFIED

0 20 40 60 80
SCALE: 1" = 20'

ISSUED BY ADDENDUM No. 1, ATTACHMENT "B"

TRANSPORTATION DEPARTMENT	LAYOUT	SHEET No.
DESIGNED BY: BRETT CRAIG R4116 — BRETT CRAIG, SENIOR CIVIL ENGINEER, COUNTY OF RIVERSIDE — 2-8-2022 DATE	EL TORO RD/DEXTER AVE SIDEWALK PROJECT STA 40+00 TO STA 44+50	L-6 SHEET 12 OF 21

USERNAME => DGN FILE =>

WO D0-0014 COUNTY FILE No. 970-UU

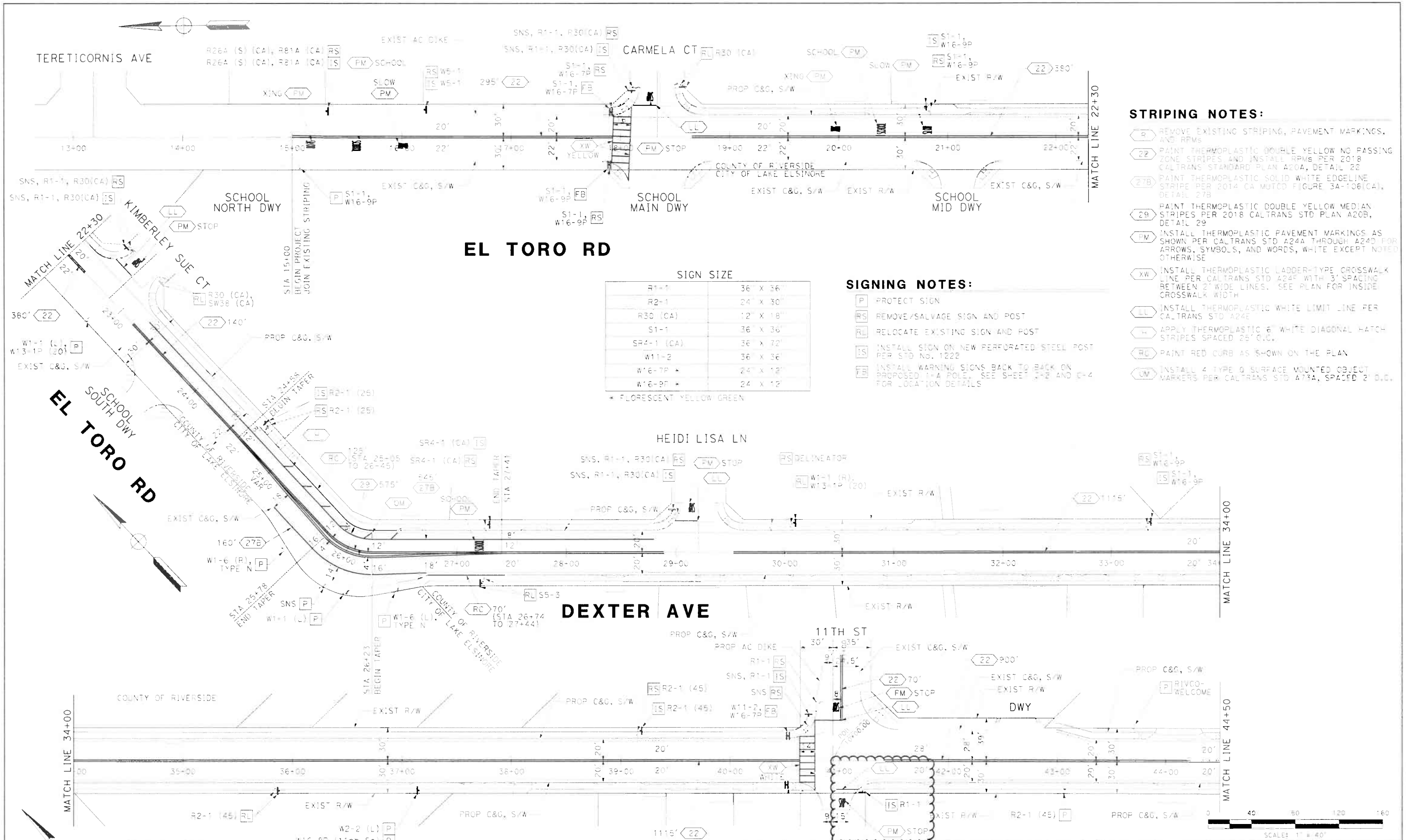

STRIPING NOTES:

- (R) REMOVE EXISTING STRIPING, PAVEMENT MARKINGS, AND RPMs
- (22) PAINT THERMOPLASTIC DOUBLE YELLOW NO PASSING ZONE STRIPES AND INSTALL RPMs PER 2018 CALTRANS STANDARD PLAN A20A, DETAIL 22
- (27B) PAINT THERMOPLASTIC SOLID WHITE EDGELINE STRIPE PER 2014 CA MUTCD FIGURE 3A-106(CA), DETAIL 27B
- (29) PAINT THERMOPLASTIC DOUBLE YELLOW MEDIAN STRIPES PER 2018 CALTRANS STD PLAN A20B, DETAIL 29
- (PM) INSTALL THERMOPLASTIC PAVEMENT MARKINGS AS SHOWN PER CALTRANS STD A24A THROUGH A24D FOR ARROWS, SYMBOLS, AND WORDS, WHITE EXCEPT NOTED OTHERWISE
- (XW) INSTALL THERMOPLASTIC LADDER-TYPE CROSSWALK LINE PER CALTRANS STD A24F WITH 3' SPACING BETWEEN 2' WIDE LINES. SEE PLAN FOR INSIDE CROSSWALK WIDTH
- (LL) INSTALL THERMOPLASTIC WHITE LIMIT LINE PER CALTRANS STD A24E
- (H) APPLY THERMOPLASTIC 6' WHITE DIAGONAL HATCH STRIPES SPACED 25' O.C.
- (RC) PAINT RED CURB AS SHOWN ON THE PLAN
- (OM) INSTALL 4 TYPE G SURFACE MOUNTED OBJECT MARKERS PER CALTRANS STD A77A, SPACED 2' O.C.

SIGN SIZE

R1-1	36" X 36"
R2-1	24" X 30"
R30 (CA)	12" X 18"
S1-1	36" X 36"
SR4-1 (CA)	36" X 72"
W11-2	36" X 36"
W16-7P *	24" X 12"
W16-9P *	24" X 12"

* FLORESCENT YELLOW GREEN

SIGNING NOTES:

- (P) PROTECT SIGN
- (RS) REMOVE/SALVAGE SIGN AND POST
- (RL) RELOCATE EXISTING SIGN AND POST
- (IS) INSTALL SIGN ON NEW PERFORATED STEEL POST PER STD No. 1222
- (FB) INSTALL WARNING SIGNS BACK TO BACK ON PROPOSED 1-A POLE. SEE SHEET C-2 AND C-4 FOR LOCATION DETAILS

ISSUED BY ADDENDUM No. 1, ATTACHMENT "B"

TRANSPORTATION DEPARTMENT	PAVEMENT DELINEATION & SIGN PLAN	SHEET No.
DESIGNED BY: BRETT CRAIG, SENIOR CIVIL ENGINEER, COUNTY OF RIVERSIDE — 2-8-2022 DATE	EL TORO RD/DEXTER AVE SIDEWALK PROJECT STA 15+00 TO STA 44+50	PD-1 SHEET 17 OF 21

USERNAME => [illegible]
DGN FILE => [illegible]

WO DO-0014

COUNTY FILE No. 970-UU

Bid

Date: 2-16-22

To: County of Riverside, hereafter called "County";

Bidder: S&H CIVILWORKS
(hereafter called "Contractor")

The undersigned, Contractor, having carefully examined the site and the Contract Documents for the construction of **El Toro Road / Dexter Avenue Sidewalk Project, Carmela Court to 680-Feet North of Central Avenue, Community of Warm Springs, Project No. D0-0014, State Project No. ATPSB1L-5956(275)** hereby proposes to construct the work in accordance with the Contract Documents, including **Addenda Number(s)** 1, A, B (Fill in addenda numbers if addenda have been issued.) for the amount stated in this Bid.

By submitting this Bid, Contractor agrees with County:

1. That unless withdrawn in person by Contractor or some person authorized in writing by Contractor (not by telephone or facsimile) before the time specified in the Notice Inviting Bids for the public opening of bids, this Bid constitutes an irrevocable offer for 90 calendar days after that date.

2. County has the right to reject any or all Bids and to waive any irregularities or informalities contained in a Bid.

3. To execute the Contract and deliver the Performance Bond, Payment Bond and Insurance Certificate with endorsements, that comply with the requirements set forth in the Instruction to Bidders and General Conditions, within ten (10) business days of the date of the Notice of Acceptance of Bid and Intent to Award as issued by the County.

4. That the contract shall be awarded upon a resolution or minute order to that effect duly adopted by the governing body of County; and that execution of the Contract shall constitute a written memorial thereof.

5. To submit to the County such information as County may require determining whether a particular Bid is the lowest responsible bid submitted.

6. That the accompanying Bid Bond, certified check or cashier's check is in an amount not less than 10% of the total bid submitted and constitutes a guarantee that if awarded the contract, Contractor will execute the Contract and deliver the required bonds within ten (10) business days after notice of award. If Contractor fails to execute and deliver said documents, the bond or check is to be charged with the costs of the resultant damages to the County, including but not limited to: publication costs, the difference in money between the amount bid and the amount in excess of the bid which it costs County to do or cause to be done for the work involved, lease and rental costs, additional salaries and overhead, increased interest and costs of funding the project, attorney expense, additional engineering and architectural expense and cost of maintaining or constructing alternate facilities occasioned by the failure to execute and deliver said documents.

7. By signing this Bid the Contractor certifies that the representations made therein are made under penalty of perjury.

ISSUED BY ADDENDUM No. 1
ATTACHMENT "A"

El Toro Road / Dexter Avenue
Sidewalk Project
Carmela Court to 680-Feet North of Central Avenue
Community of Warm Springs
Project No. D0-0014
State Project No. ATPSB1L-5956(275)

REVISED PROPOSAL

ITEM No.	ITEM CODE	ITEM	UNIT	ESTIMATED QUANTITY	ITEM PRICE (IN FIGURES)	TOTAL (IN FIGURES)
1	015602	FUNDING AWARENESS SIGN	EA	2	2000	4000
2	066102	DUST ABATEMENT	LS	1	7500	7500
3	100100	DEVELOP WATER SUPPLY	LS	1	15000	15000
4	120100	TRAFFIC CONTROL SYSTEM	LS	1	15000	15,000
5	130200	PREPARE WATER POLLUTION CONTROL PROGRAM	LS	1	15000	15,000
6	170103	CLEARING AND GRUBBING	LS	1	15000	15,000
7	190101 (F)	ROADWAY EXCAVATION	CY	1,500	30	45,000
8	803170	RELOCATE FENCE (CHAIN LINK, WOOD, VINYL)	LF	400	30	12,000
9	800300	CHAIN LINK FENCE	LF	40	100	4,000
10	260203	CLASS 2 AGGREGATE BASE	CY	950	50	47,500
11	390132	HOT MIX ASPHALT (TYPE A)	TON	420	115	48,300
12	390126	RUBBERIZED ASPHALT CONCRETE (TYPE G)	TON	1,750	115	201,250
13	398200	COLD PLANE ASPHALT CONCRETE PAVEMENT	SQYD	11,500	1.00	11500
14	013903	PLACE ASPHALT CONCRETE DIKE (CRS 212) (6")	LF	100	60	6000
15	510516	MINOR CONCRETE (RETAINING WALL) [TYPE 6A CASE 1]	LF	40	60	2400
16	17305	MINOR CONCRETE (CURB AND GUTTER) (CRS 201)	LF	5,000	50	250,000
17	017310	MINOR CONCRETE (DRIVEWAY APPROACH) (CRS 207)	EA	27	20	540
18	731521	MINOR CONCRETE (SIDEWALK)	SQFT	27,000	9	243,000
19	017306	MINOR CONCRETE (CURB RAMP) (CRS 403)	EA	16	4500	72000
20	017317	MINOR CONCRETE (CROSS-GUTTER AND SPANDREL)	SQFT	2,600	27	70,200
21	730010	MINOR CONCRETE (CURB) [SIDEWALK RETAINING CURB]	LF	2,050	30	61500

ISSUED BY ADDENDUM No. 1
ATTACHMENT "A"

REVISED PROPOSAL

ITEM No.	ITEM CODE	ITEM	UNIT	ESTIMATED QUANTITY	ITEM PRICE (IN FIGURES)	TOTAL (IN FIGURES)
22	190185	SHOULDER BACKING	LF	6,500	5	32500
23	017003	CATCH BASIN (CURB INLET) (CRS 300)	EA	2	5000	19,000
24	017004	CATCH BASIN (COMBINATION INLET) (CRS 301 - No. 1)	EA	3	7500	22500
25	152607	MODIFY CATCH BASIN	EA	2	5000	10000
26	017105	JUNCTION STRUCTURE (RCFC&WCDS JS 227)	EA	4	4000	16,000
27	665018	18" CORRUGATED STEEL PIPE (.109" THICK)	LF	300	200	60,000
28	731656	CURB RAMP DETECTABLE WARNING SURFACE	EA	2	1000	2000
29	037301	REMOVE EXISTING HARDSCAPE AND REPLACE IN KIND	LS	1	5000	5000
30	782110	RESET MAILBOX	EA	5	450	2250
31	820250	REMOVE ROADSIDE SIGN	EA	15	500	7500
32	820610	RELOCATE ROADSIDE SIGN [AND POST]	EA	10	600	6000
33	820840	ROADSIDE SIGN - ONE POST	EA	21	650	13,650
34	820860	INSTALL SIGN [STRAP AND SADDLE BRACKET METHOD]	EA	4	500	2000
35	840515	THERMOPLASTIC PAVEMENT MARKING	SQFT	850	5.00	4250
36	840656	PAINT TRAFFIC STRIPE (2-COAT)	LF	7,000	1.00	7000
37	810230 (F)	PAVEMENT MARKER (RETROREFLECTIVE)	EA	450	5.00	2250
38	150717	REMOVE TRAFFIC STRIPE AND PAVEMENT MARKING	SQFT	3,500	3.00	10500
39	870700	FLASHING BEACON SYSTEM (2 LOCATIONS)	LS	1	25000	25000
40	010602	MISCELLANEOUS WORK (AS DIRECTED)	FA	1	120,000.00	120,000.00

PROJECT TOTAL: ITEMS 1-40 One Million Five Hundred Five Thousand Ninety dollars "WORDS" $ 1,505,090

Bidder Data and Signature

Name of Bidder: S&H CIVILWORKS

Type of organization: CORPORATION

Person(s) authorized to sign for Bidder: JESSE SOTO
JOSE HERMOSILLO
CHARLOTTE GUTIERREZ

Note:
If Bidder is a **Corporation**, state legal name of Corporation and also names of the president, vice-president, secretary, treasurer and manager thereof.
If Bidder is a **Co-Partnership**, state true name of firm and also names of all individual co-partners composing firm.
If Bidder is a sole proprietorship or an **Individual**, state first and last name(s) in full.
If Bid is signed by an agent other than an owner, partner or corporate officer, Bid shall be accompanied by a power-of-attorney.

Business Street Address: 1801 HILLTOP DR COLTON CA 92324
(Please include business address even if P.O. Box is used.)

Business City, State, Zip Code: COLTON CA 92324

P.O. Box- Number:

P.O. Box- City, State, Zip Code:

Phone: (909) 206 1181

Facsimile: (909) 498 8021

E-mail: jesse@sandhcivilworks.com

Contractor's license number: 1008640

License Classification(s): CLASS "A"

Expiration date: 11/30/23

Department of Industrial Relations Registration Number: 1000034468

Bidder Data and Signature (continued)

Accompanying this Bid is a certified check, cashier check or bid bond in an amount equal to at least ten (10) percent of the total bid for:

El Toro Road / Dexter Avenue
Sidewalk Project
Carmela Court to 680-Feet North of Central Avenue
Community of Warm Springs
Project No. D0-0014
State Project No. ATPSB1L-5956(275)

By my signature on this Bid, I certify, under penalty of perjury under the laws of the State of California, that all the information on this form is true and correct.

IN WITNESS WHERE OF Bidder/Contractor executed this Bid as of the date set forth on page **B1** of this Bid.

Signature: _____

Name (printed): JESSE SOTO

Title: PRESIDENT

"Contractor"

Subcontractor List

Bidder/Contractor submits the following complete list of each Subcontractor who will perform work, labor or render service in or about the construction in an amount in excess of 1/2 of 1% of the total bid or $10,000 whichever is greater.

Check box on right side of row if any construction item, for the listed Subcontractor, is partial work. If partial work is to be performed within a certain construction item or trade, the Bidder/Contractor shall specify the portion(s) of the work to be performed by the different subcontractors or Bidder/Contractor will be subject to provisions of Public Contract Code Section 4106.

Name of Bidder (Prime/General Contractor): S&A Civil/Works

	Subcontractor Name	License Number	DIR Registration Number	Business Address (City, State)	Construction Item(s) [Item Number and Description]	Check if Partial Work
1.	Cat Tracking CTI	991122	10000 11750	17 Commerce Riverside CA 92507	31 - 38	☒
2.						☐
3.						☐
4.						☐
5.						☐
6.						☐

Additional Subcontractor List(s) may be attached to the Bid.
(A copy of this form may be attached with additional Subcontractor information.)

Percent of work to be performed by Subcontractors: 1.40 %

Note: A minimum of 50% of the work is required to be performed by the prime/general Contractor.

Non-Collusion Declaration

To be executed by bidder and submitted with bid.
(Title 23 United States Code Section 112 and Public Contract Code Section 7106)

The undersigned declares:

I am the SECRETARY **(Title)** of S&H CIVILWORKS **(Company)**, the party making the foregoing bid.

The bid is not made in the interest of, or on behalf of, any undisclosed person, partnership, company, association, organization, or corporation. The bid is genuine and not collusive or sham. The bidder has not directly or indirectly induced or solicited any other bidder to put in a false or sham bid. The bidder has not directly or indirectly colluded, conspired, connived, or agreed with any bidder or anyone else to put in a sham bid, or that anyone shall refrain from bidding. The bidder has not in any manner, directly or indirectly, sought by agreement, communication, or conference with anyone to fix the bid price of the bidder or any other bidder, or to fix any overhead, profit, or cost element of the bid price, or of that of any other bidder.

All statements contained in the bid are true. The bidder has not, directly or indirectly, submitted his or her bid price of any breakdown thereof, or the contents thereof, or divulged information or data relative thereto, to any corporation, partnership, company, association, organization, bid depository, or to any member or agent thereof to effectuate a collusive or sham bid, and has not paid, and will not pay, any person or entity for such purpose.

Any person executing this declaration on behalf of a bidder that is a corporation, partnership, joint venture, limited liability company, limited liability partnership, or any other entity, hereby represents that he or she has full power to execute, and does execute, this declaration on behalf of the bidder.

I declare under penalty of perjury under the applicable laws that the foregoing is true and correct and that this declaration is executed on

FEBRUARY **(Month)** 16TH **(Day)** of 2022 **(Year)**,

at Grand Terrace **(City)**, CA **(State)**.

Signature of Declarant: [signature]

Printed name of Declarant: CHARLOTTE GUTIERREZ

Name of Bidder (Company): S&H CIVILWORKS

Title or Office: SECRETARY

Note: Notarization of signature required.
☐ Check box if attachment is included.

ACKNOWLEDGMENT

A notary public or other officer completing this certificate verifies only the identity of the individual who signed the document to which this certificate is attached, and not the truthfulness, accuracy, or validity of that document.

State of California
County of San Bernardino)

On Feb. 16, 2022 before me, Jaspreet Kaur,Notary Public
(insert name and title of the officer)

personally appeared CHARLOTTE GUTIERREZ,
who proved to me on the basis of satisfactory evidence to be the person(~~s~~) whose name(~~s~~) is/~~are~~ subscribed to the within instrument and acknowledged to me that ~~he~~/she/~~they~~ executed the same in ~~his~~/her/~~their~~ authorized capacity(~~ies~~), and that by ~~his~~/her/~~their~~ signature(~~s~~) on the instrument the person(~~s~~), or the entity upon behalf of which the person(~~s~~) acted, executed the instrument.

I certify under PENALTY OF PERJURY under the laws of the State of California that the foregoing paragraph is true and correct.

WITNESS my hand and official seal.

RSE1 JASPREET KAUR
COMM. #2250547
NOTARY PUBLIC - CALIFORNIA
SAN BERNARDINO COUNTY
My Comm. Expires Aug. 16, 2022 RSE1

Signature Jaspreet Kaur **(Seal)**

Iran Contracting Act

(Public Contract Code sections 2200-2208)

Prior to bidding on, submitting a proposal or executing a contract or renewal for a County of Riverside contract for goods or services of **$1,000,000 or more**, a Contractor must either:

a) Certify it is not on the current list of persons engaged in investment activities in Iran created by the California Department of General Services ("DGS") pursuant to Public Contract Code section 2203(b) and is not a financial institution extending twenty million dollars ($20,000,000) or more in credit to another person, for 45 days or more, if that other person will use the credit to provide goods or services in the energy sector in Iran and is identified on the current list of persons engaged in investment activities in Iran created by DGS; or

b) Demonstrate it has been exempted from the certification requirement for that solicitation or contract pursuant to Public Contract Code section 2203(c) or (d).

To comply with this requirement, please insert your Contractor or financial institution name and Federal ID Number (if available) and complete one of the options below. Please note: California law establishes penalties for providing false certifications, including civil penalties equal to the greater of $250,000 or twice the amount of the contract for which the false certification was made; contract termination; and three-year ineligibility to bid on contracts. (Public Contract Code section 2205.)

Option #1 – Certification

I, the official named below, certify I am duly authorized to execute this certification on behalf of the vendor/financial institution identified below, and the vendor/financial institution identified below is **not** on the current list of persons engaged in investment activities in Iran created by DGS and is not a financial institution extending twenty million dollars ($20,000,000) or more in credit to another person/vendor, for 45 days or more, if that other person/vendor will use the credit to provide goods or services in the energy sector in Iran and is identified on the current list of persons engaged in investment activities in Iran created by DGS.

Contractor Name/Financial Institution (Printed) S&H GRILLWORKS	*Federal ID Number (or n/a)* 475560195
By (Authorized Signature)	
Printed Name and Title of Person Signing JESSE SCOTT, PRESIDENT	
Date Executed 2/16/22	*Executed in* Colton California

Option #2 – Exemption

Pursuant to Public Contract Code sections 2203(c) and (d), a public entity may permit a Contractor/financial institution engaged in investment activities in Iran, on a case-by-case basis, to be eligible for, or to bid on, submit a proposal for, or enters into or renews, a contract for goods and services.

If you have obtained an exemption from the certification requirement under the Iran Contracting Act, please fill out the information below, and **attach documentation demonstrating the exemption approval**.

Contractor Name/Financial Institution (Printed)	*Federal ID Number (or n/a)*
By (Authorized Signature)	
Printed Name and Title of Person Signing	
Date Executed	*Executed in*

Opt Out of Payment Adjustments for Price Index Fluctuations

El Toro Road / Dexter Avenue
Sidewalk Project
Carmela Court to 680-Feet North of Central Avenue
Community of Warm Springs
Project No. D0-0014
State Project No. ATPSB1L-5956(275)

To opt out of the payment adjustments for price index fluctuations, as specified in Standard Specifications Section 9-1.07 "Payment Adjustments for Price Index Fluctuations," completely fill in, date, sign, and submit this form with the Bid documents.

By signing and submitting this form, our company hereby opts out of the payment adjustments for price index fluctuations for the above-named project.

Date: 2/16/22

Company Name (Bidder): SBH CIVILWORKS

Signature: [signature]

(Signature of Company's authorized officer or designated representative)

Name (printed): JESSE SOTO

Title: PRESIDENT

Bid Bond

Recitals:

1. S & H Civilworks "Contractor", has submitted his/her Contractor's Proposal to County of Riverside, "County", for the construction of public work for **El Toro Road/Dexter Avenue Sidewalk Project, Carmela Court to 680-Feet North of Central Avenue, Community of Warm Springs, Project No. D0-0014, State Project No. ATPSB1L-5956(275)** in accordance with a Notice Inviting Bids from the County.
2. Philadelphia Indemnity Insurance Company a Pennsylvania corporation, hereafter called "Surety", is the surety of this bond.

Agreement:

We, Contractor as Principal and Surety as Surety, jointly and severally agree and state as follows:

1. The amount of the obligation of this bond is 10% of the amount of the Contractor's Proposal, including bid alternates, and inures to the benefit of County.
2. This Bond is exonerated by (1) County rejecting said Proposal or, in the alternate, (2) if said Proposal is accepted, Contractor executes the Contract and furnishes the Bonds as agreed to in its Proposal, otherwise it remains in full force and effect for the recovery of loss, damage and expense of County resulting from failure of Contractor to act as agreed to in its Proposal. Some types of possible loss, damage and expense are specified in the Contractor's Proposal.
3. Surety, for value received, stipulates and agrees that its obligations hereunder shall in no way be impaired or affected by any extension of time within which County may accept the Proposal and waives notice of any such extension.
4. This Bond is binding on our heirs, executors, administrators, successors and assigns.

Dated: February 2, 2022

Signatures:

Philadelphia Indemnity Insurance Company	S & H Civilworks
By: Laurie B Druck	By: [illegible]
Title: Laurie B. Druck, Attorney in Fact "Surety"	Title: Secretary "Contractor"

STATE OF _____
COUNTY OF _____ } ss. SURETY'S ACKNOWLEDGEMENT

On _____ before me, _____ personally appeared, _____ known to me, or proved to me on the basis of satisfactory evidence, to be the person whose name is subscribed to the within instrument and acknowledged to me that he/she executed the same in his/her authorized capacities, and that by his/her signature on the instrument the person, or the entity upon behalf of which the person acted, executed the instrument.

WITNESS my hand and official seal.

_____
Signature of Notary Public Notary Public (Seal)

Note: This Bond must be executed by both Contractor and Surety with corporate seal affixed. All signatures must be notarized. (Attach acknowledgements).

ACKNOWLEDGMENT

A notary public or other officer completing this certificate verifies only the identity of the individual who signed the document to which this certificate is attached, and not the truthfulness, accuracy, or validity of that document.

State of California
County of San Bernardino)

On Feb. 16, 2022 before me, Jaspreet Kaur,Notary Public
(insert name and title of the officer)

personally appeared CHARLOTTE GUTIERREZ
who proved to me on the basis of satisfactory evidence to be the person(~~s~~) whose name(~~s~~) is/~~are~~ subscribed to the within instrument and acknowledged to me that ~~he~~/she/~~they~~ executed the same in ~~his~~/her/~~their~~ authorized capacity(~~ies~~), and that by ~~his~~/her/~~their~~ signature(~~s~~) on the instrument the person(~~s~~), or the entity upon behalf of which the person(~~s~~) acted, executed the instrument.

I certify under PENALTY OF PERJURY under the laws of the State of California that the foregoing paragraph is true and correct.

WITNESS my hand and official seal.

RSE1 JASPREET KAUR
COMM. #2250547
NOTARY PUBLIC - CALIFORNIA
SAN BERNARDINO COUNTY
My Comm. Expires Aug. 16, 2022 RSE1

Signature Jaspreet Kaur (Seal)

CALIFORNIA ALL-PURPOSE ACKNOWLEDGEMENT

A notary public or other officer completing this certificate verifies only the identity of the individual who signed the document to which this certificate is attached, and not the truthfulness, accuracy, or validity of that document.

State of California
County of San Bernardino) ss.

On FEB 2 - 202 before me, Rebecca Elizabeth Adcock, Notary Public
Name and Title of Officer (e.g., "Jane Doe, Notary Public")

personally appeared Laurie B. Druck
Name(s) of Signer(s)

who proved to me on the basis of satisfactory evidence to be the person whose name is subscribed to the within instrument and acknowledged to me that she executed the same in her authorized capacity, and that by her signature on the instrument the person, or the entity upon behalf of which the person acted, executed the instrument.

Rebecca Elizabeth Adcock
COMMISSION # 2327252
NOTARY PUBLIC - CALIFORNIA
SAN BERNARDINO COUNTY
My Comm. Expires 3-May-2024

I certify under PENALTY OF PERJURY under the laws of the State of California that the foregoing paragraph is true and correct.

WITNESS my hand and official seal.

Signature of Notary Public

OPTIONAL

Though the information below is not required by law, it may prove valuable to persons relying on the document and could prevent fraudulent removal and reattachment of this form to another document.

Description of Attached Document

Title or Type of Document: _____
Document Date: _____ Number of Pages: _____
Signer(s) Other Than Named Above: _____

Capacity(ies) Claimed by Signer(s)

Signer's Name: _____

RT THUMBPRINT OF SIGNER
Top of thumb here

- ❒ Individual
- ❒ Corporate Officer
  Title _____
- ❒ Partner -- ❒ Limited ❒ General
- ❒ Attorney-in-Fact
- ❒ Trustee
- ❒ Guardian or Conservator

Other: _____

Signer is Representing:

_____

_____

STATE OF CALIFORNIA

DEPARTMENT OF INSURANCE № 07927

SAN FRANCISCO

Amended

Certificate of Authority

THIS IS TO CERTIFY *THAT, Pursuant to the Insurance Code of the State of California,*

Philadelphia Indemnity Insurance Company

of Bala Cynwyd, Pennsylvania *, organized under the laws of* Pennsylvania *, subject to its Articles of Incorporation or other fundamental organizational documents, is hereby authorized to transact within the State, subject to all provisions of this Certificate, the following classes of insurance:*

Fire, Marine, Surety, Plate Glass,

Liability, Boiler and Machinery, Burglary,

Sprinkler, Automobile, and Miscellaneous

as such classes are now or may hereafter be defined in the Insurance Laws of the State of California.

THIS CERTIFICATE *is expressly conditioned upon the holder hereof now and hereafter being in full compliance with all, and not in violation of any, of the applicable laws and lawful requirements made under authority of the laws of the State of California as long as such laws or requirements are in effect and applicable, and as such laws and requirements now are, or may hereafter be changed or amended.*

IN WITNESS WHEREOF, *effective as of the* 14th *day of* October, 2004, *I have hereunto set my hand and caused my official seal to be affixed this* 14th *day of* October, 2004.

John Garamendi
Insurance Commissioner

By

Victoria S. Salinas
for Ida Zodrow
Asst. Chief Deputy

NOTICE:
Qualification with the Secretary of State must be accomplished as required by the California Corporations Code promptly after issuance of this Certificate of Authority. Failure to do so will be a violation of Insurance Code Section 701 and will be grounds for revoking this Certificate of Authority pursuant to the convenants made in the application therefor and the conditions contained herein.

FORM CB-3

OSP 00 39391

PHILADELPHIA INDEMNITY INSURANCE COMPANY
One Bala Plaza, Suite 100
Bala Cynwyd, PA 19004-0950

Power of Attorney

KNOW ALL PERSONS BY THESE PRESENTS. That **PHILADELPHIA INDEMNITY INSURANCE COMPANY** (the Company), a corporation organized and existing under the laws of the Commonwealth of Pennsylvania, does hereby constitute and appoint **Jay P. Freeman, Cynthia J. Young, Laurie B. Druck, Melissa Schwartz and Christina Mountz of Alliant Insurance Services, Inc**, its true and lawful Attorney-in-fact with full authority to execute on its behalf bonds, undertakings, recognizances and other contracts of indemnity and writings obligatory in the nature thereof, issued in the course of its business and to bind the Company thereby, in an amount not to exceed **$50,000,000.00**.

This Power of Attorney is granted and is signed and sealed by facsimile under and by the authority of the following Resolution adopted by the Board of Directors of PHILADELPHIA INDEMNITY INSURANCE COMPANY on the 14th of November, 2016.

RESOLVED: That the Board of Directors hereby authorizes the President or any Vice President of the Company, (1) Appoint Attorney(s) in Fact and authorize the Attorney(s) in Fact to execute on behalf of the Company bonds and undertakings, contracts of indemnity and other writings obligatory in the nature thereof and to attach the seal of the Company thereto, and (2) to remove, at any time, any such Attorney-in-Fact and revoke the authority given. And, be it

FURTHER RESOLVED: That the signatures of such officers and the seal of the Company may be affixed to any such Power of Attorney or certificate relating thereto by facsimile, and any such Power of Attorney so executed and certified by facsimile signatures and facsimile seal shall be valid and binding upon the Company in the future with respect to any bond or undertaking to which it is attached.

IN TESTIMONY WHEREOF, PHILADELPHIA INDEMNITY INSURANCE COMPANY HAS CAUSED THIS INSTRUMENT TO BE SIGNED AND ITS CORPORATE SEAL TO BE AFFIXED BY ITS AUTHORIZED OFFICE THIS 27TH DAY OF OCTOBER, 2017.

(Seal)

Robert D. O'Leary Jr., President & CEO
Philadelphia Indemnity Insurance Company

On this 27th day of October, 2017, before me came the individual who executed the preceding instrument, to me personally known, and being by me duly sworn said that he is the therein described and authorized officer of the **PHILADELPHIA INDEMNITY INSURANCE COMPANY**, that the seal affixed to said instrument is the Corporate seal of said Company; that the said Corporate Seal and his signature were duly affixed.

(Notary Seal)

Notary Public: Morgan Knapp

residing at: Bala Cynwyd, PA

My commission expires: September 25, 2021

I, Edward Sayago, Corporate Secretary of PHILADELPHIA INDEMNITY INSURANCE COMPANY, do hereby certify that the foregoing resolution of the Board of Directors and the Power of Attorney issued pursuant thereto on the 27th day of October, 2017 are true and correct and are still in full force and effect. I do further certify that Robert D. O'Leary Jr., who executed the Power of Attorney as President, was on the date of execution of the attached Power of Attorney the duly elected President of PHILADELPHIA INDEMNITY INSURANCE COMPANY.

In Testimony Whereof I have subscribed my name and affixed the facsimile seal of each Company this 2nd day of February, 2022.

Edward Sayago, Corporate Secretary
PHILADELPHIA INDEMNITY INSURANCE COMPANY

COUNTY OF RIVERSIDE
TRANSPORTATION AND LAND MANAGEMENT AGENCY
Transportation Department

Mark Lancaster, P.E.
Director of Transportation

ADDENDUM NUMBER 1

Dated February 9, 2022

to the
Specifications and Contract Documents
for the construction of

El Toro Road / Dexter Avenue Sidewalk Project
Carmela Court to 680-Feet North of Central Avenue
Community of Warm Springs
Project No. D0-0014
State Project No. ATPSB1L-5956(275)

Bids Due: **Wednesday, February 16, 2022; 2:00 p.m.**
14th Street Transportation Annex
3525 14th Street; Riverside, CA 92501
(951) 955-6780

This Addendum is issued pursuant to the Instructions to Bidders, Item No. 8, of the Contract Documents for the reference project. This Addendum is issued as a supplement to the specification and special provisions for the referenced project. The revisions to the specifications shall become a part of the Contract Documents, and each bidder shall acknowledge receipt thereof on the Bid (Proposal). Bidders are directed to sign this addendum as acknowledged and attach the signed addendum to the contractor's submitted proposal.

Note: During the advertisement period of this project, this document and attachments (if any) are available upon request at the office of the Transportation Department, and are available as a free download at the Transportation Department's website:

http://rctlma.org/trans/Contractors-Corner/Notices-Inviting-Bids

MODIFICATIONS / CLARIFICATIONS TO SPECIAL PROVISIONS:

Item 1: Revised Proposal.
Refer to "Proposal" pages B2-B3. Delete and replace "Proposal" (pages B2-B3) with "Proposal (Revised)" attached herewith as **Attachment "A".**

Note: Revisions made to the proposal by Addendum No. 1 are written with blue font / blue numbers in Attachment "A".

a. Estimated Quantity has been revised for the following bid items:

Item 14, PLACE ASPHALT CONCRETE DIKE (CRS 212) (6")
Item 21, MINOR CONCRETE (CURB) [SIDEWALK RETAINING CURB]
Item 33, ROADSIDE SIGN - ONE POST
Item 35, THERMOPLASTIC PAVEMENT MARKING

3525 14th Street, Riverside, CA 92501 (951) 955-6800
FAX (951) 955-3704

b. The description has been revised for the following bid items:

Item 39, FLASHING BEACON SYSTEM (2 LOCATIONS)

Item 2: Chain Link Fences

Refer to sub-section 80-3.04, "Payment" of section 80-3, "Chain Link Fences," on page 53 of the special provisions.

Delete the paragraph in section 80-3.04, "Payment", and replace it with the following paragraph:

Chain Link Fence shall be measured and paid for at the contract unit price per linear feet; and shall include full compensation for all labor, materials, tools, and equipment and for doing all work involved in installing chain link fence Chain Link Fence where shown on the plans including any necessary excavation and backfill, installation of anchor posts in retaining curb per Caltrans Standard B11-7, furnishing and placing reinforcement steel bars, and no additional compensation will be allowed therefor.

Item 3: Solar Powered Flashing Beacon

Refer to Section 87-1, "General, Solar Powered Flashing Beacon", on pages 59 through 61 of the special provisions.

The following special provisions are added to sub-section A "General" of Solar Powered Flashing Beacon provisions.

Location where Flashing Beacons work is to be performed:

- El Toro Road and Carmela Court/ School Main Driveway
- Dexter Avenue and 11th Street

Delete the payment paragraph on page 61 of the special provisions and replace it with the following paragraph:

Payment

The contract price paid **per lump sum** for Flashing Beacon System (2 Locations) shall include full compensation for furnishing all labor, materials, tools, equipment, and incidentals, and for doing all the work involved in installing solar powered flashing beacons systems complete in-place at El Toro Road and Carmela Court/ School Main Driveway and at Dexter Avenue and 11th Street, and no additional compensation will be allowed therefor.

MODIFICATIONS / CLARIFICATIONS TO THE PLANS

Item 4: Plan sheet revisions

Refer to Plan Sheets for El Toro Road / Dexter Avenue Sidewalk Project. The following Plan sheets are revised and issued hereby as part of **Attachment "B"**. Delete and replace the following ten (10) plan sheets from the set:

Summary of Modifications Made to Plans

1. Plan sheet 2 of 21, X-1, modified Construction Note No. 32
2. Plan sheet 3 of 21, C-1, modified Construction Note No. 32, modified dimension of retaining curb on detail No. 23
3. Plan sheet 6 of 21, C-4, modified few FL and TC elevations on the west side curb ramps at Dexter Avenue and 11th Street intersection
4. Plan sheet 7 of 21, L-1, modified Construction Note No. 32, retaining curb dimension (6") added to few callouts for Construction Note No. 23, added callouts for adjust pullbox to grade by SCE
5. Plan sheet 8 of 21, L-2, modified Construction Note No. 32, retaining curb dimension (6") added to few callouts for Construction Note No. 23
6. Plan sheet 9 of 21, L-3, modified Construction Note No. 32, retaining curb dimension (6") added to few callouts for Construction Note No. 23, modified limits of retaining curb
7. Plan sheet 10 of 21, L-4, modified Construction Note No. 32, retaining curb dimension (6" or 18") added to few callouts for Construction Note No. 23
8. Plan sheet 11 of 21, L-5, modified Construction Note No. 32, retaining curb dimension (6" or 12" or 12"-24") added to few callouts for Construction Note No. 23
9. Plan sheet 12 of 21, L-6, modified Construction Note No. 32, retaining curb dimension (6") added to few callouts for Construction Note No. 23, modified width of 11th Street to protect guy pole in place, reduced curb and gutter quantity, increased AC dike quantity
10. Plan sheet 17 of 21, PD-1, modified width of 11th Street, added limit line, paving marking, and roadside sign

Note: Revised plan sheets are posted on the County website and available for download during the advertisement period.

http://rctlma.org/trans/Contractors-Corner/Notices-Inviting-Bids

ATTACHMENTS
A – Revised Proposal (2 pages)
B – Revised Plan Sheets (10 sheets)

This addendum has been prepared under the direction of the following registered Civil Engineer(s):

Recommended by:

Brett Craig, PE
Senior Civil Engineer

REGISTERED PROFESSIONAL ENGINEER
Brett Craig
No. C- 84116
CIVIL
STATE OF CALIFORNIA

Concurrence:

Dennis Acuna, PE
Engineering Division Manager

Acknowledged: _____ (Contractor) Date: 2-16-22

JRJ: jrj:rr

Note: Refer to Instruction to Bidders Item No. 8, Addenda. Submission of all addendum pages and non-bidding document attachments of addendum are not necessary for Bid submittal. Submittal of this acknowledgement page is adequate for Bid reception. Bidders are reminded to list addendum number(s) received on the first page of the Bid form (Proposal).

CALIFORNIA DEPARTMENT OF INSURANCE

COMPANY PROFILE

Company Information

PHILADELPHIA INDEMNITY INSURANCE COMPANY

ONE BALA PLAZA SUITE 100
BALA CYNWYD, PA 19004
877-438-7459

Old Company Names **Effective Date**

Agent For Service

Vivian Imperial
818 WEST SEVENTH STREET
SUITE 930
LOS ANGELES CA 90017

Reference Information

NAIC #:	18058
California Company ID #:	3576-6
Date Authorized in California:	01/27/1993
License Status:	UNLIMITED-NORMAL
Company Type:	Property & Casualty
State of Domicile:	PENNSYLVANIA

back to top

NAIC Group List

NAIC Group #: 3098 Tokio Marine Holdings Inc GRP

Lines Of Business

The company is authorized to transact business within these lines of insurance. For an explanation of any of these terms, please refer to the glossary.

AUTOMOBILE
BOILER AND MACHINERY
BURGLARY
COMMON CARRIER LIABILITY
DISABILITY
FIRE
LIABILITY
MARINE
MISCELLANEOUS
PLATE GLASS
SPRINKLER
SURETY
TEAM AND VEHICLE

Riverside County Contract No. **22-02-005**

Contract

THIS CONTRACT is entered into at Riverside, California as of the date set forth below is between County of Riverside hereafter called "County" and **S&H Civilworks**, hereafter called "Contractor".

W I T N E S S E T H

Recitals:

1. Contractor has submitted to County his Contractor's Proposal for the construction of County Project, **El Toro Road/Dexter Avenue Sidewalk Project, Carmela Court to 680-Feet North of Central Avenue, Community of Warm Springs, Project No. D0-0014, State Project No. ATPSB1L-5956(275)**, in strict accordance with the Contract Documents identified below and County has accepted said Proposal.

2. Contractor states that he has reexamined his Contractor's Proposal and found it to be correct, has ascertained that his subcontractors are properly licensed and possess the requisite skill and forces, has reexamined the site and Contract Documents and is of the opinion that he can presently do the work in accordance with the Contract Documents for the money set forth in his Proposal to be paid as provided in the Contract Documents.

Agreement:

It is agreed by the parties as follows:

1. Contract Documents

   The entire Contract consists of the following: (a) The Construction Contract, (b) The Notice to Bidders. (c) The Instruction to Bidders, (d) The Bid, (e) The Bid Bond, (f) The Payment Bond, (g) The Performance Bond, (h) The General Conditions, (i) The Special Provisions, (j) The Standard Specifications of the State of California Department of Transportation edition of **2018** as modified in other portions of the Contract Documents and as amended by the State of California Department of Transportation, (k) The Standard Plans of the Department of Transportation identified on the plans or in the Special Provisions, (l) The Plans, (m) Addenda **(One)** , (n) The Determination of Prevailing Wage Rates for Public Works, (o) Any Change Orders issued, and (p) Any additional or supplemental specifications, notice, instructions and drawings issued in accordance with the provisions of the Contract Documents. All of said Documents presently in existence are by this reference incorporated herein with like effect as if here set forth in full and upon the proper issuance of other documents they shall likewise be deemed incorporated. The Bid Bond is exonerated upon execution of this Contract and the Payment Bond and Performance Bond.

MAY 10 2022 3.28

2. The Work

Contractor shall do all tasks necessary to construct the work generally described in Recital No. 1 in accordance with the Contract Documents.

3. Prosecution, Progress and Liquidated Damages

Attention is directed to the provisions in Section 8-1.04,"Start of Job Site Activities", Section 8-1.05, "Time", and in Section 8-1.10 "Liquidated Damages" of the Standard Specifications and these Special Provisions.

Standard Specification Section 8-1.04B, "Standard Start" is modified to read as follows:

The Contractor shall begin work within fifteen (15) calendar days, or as revised in the Special Provisions, of the date stated within the written "Notice to Proceed".

The Contractor shall notify the Engineer, in writing, of the Contractor's intent to begin work at least 72 hours before work is begun. If the project has more than one (1) location of work, Contractor shall submit a separate notice for each location. The notice shall be delivered to the Transportation Department's Construction Engineer and shall specify the date the Contractor intends to start at said location.

Should the Contractor begin work in advance of receiving a written "Notice to Proceed", any work performed by the Contractor in advance of the date stated in the "Notice to Proceed" shall be considered as having been done by the Contractor at his own risk and as a volunteer and subject to the following:

A. The Contractor shall, on commencing operations, take all precautions required for public safety and shall observe all the provisions in the Specifications and the Special Provisions.

B. All work done according to the Contract, prior to the issuance of the "Notice to Proceed", will be considered authorized work and will be paid for as provided in the contract.

C. The Contractor shall not be entitled to any additional compensation or an extension of time for any delay, hindrance or interference caused by or attributable to commencement of work prior to the issuance of the "Notice to Proceed".

4. Compensation

Contractor shall be paid in the manner set forth in the Contract Documents the amount of his Proposal as accepted by County, the above rates, subject to additions and deductions as provided in the Contract Documents. Said Proposal is on file in the Office of the Clerk of the Board of Supervisors of County.

El Toro Road / Dexter Avenue
Sidewalk Project
Carmela Court to 680-Feet North of Central Avenue
Community of Warm Springs
Project No. D0-0014
State Project No. ATPSB1L-5956(275)

Contract

ITEM No.	ITEM CODE	ITEM	UNIT	ESTIMATED QUANTITY	ITEM PRICE (IN FIGURES)	TOTAL (IN FIGURES)
BASE BID SCHEDULE – El Toro Road / Dexter Avenue Sidewalk						
1	015602	FUNDING AWARENESS SIGN	EA	2	2,000.00	4,000.00
2	066102	DUST ABATEMENT	LS	1	7,500.00	7,500.00
3	100100	DEVELOP WATER SUPPLY	LS	1	15,000.00	15,000.00
4	120100	TRAFFIC CONTROL SYSTEM	LS	1	15,000.00	15,000.00
5	130200	PREPARE WATER POLLUTION CONTROL PROGRAM	LS	1	15,000.00	15,000.00
6	170103	CLEARING AND GRUBBING	LS	1	15,000.00	15,000.00
7	190101(F)	ROADWAY EXCAVATION	CY	1,500	30.00	45,000.00
8	803170	RELOCATE FENCE (CHAIN LINK, WOOD, VINYL)	LF	400	30.00	12,000.00
9	800300	CHAIN LINK FENCE	LF	40	100.00	4,000.00
10	260203	CLASS 2 AGGREGATE BASE	CY	950	50.00	47,500.00
11	390132	HOT MIX ASPHALT (TYPE A)	TON	420	115.00	48,300.00
12	390126	RUBBERIZED ASPHALT CONCRETE (TYPE G)	TON	1,750	115.00	201,250.00
13	398200	COLD PLANE ASPHALT CONCRETE PAVEMENT	SQYD	11,500	1.00	11,500.00
14	013903	PLACE ASPHALT CONCRETE DIKE (CRS 212) (6")	LF	100	60.00	6,000.00
15	510516	MINOR CONCRETE (RETAINING WALL) [TYPE 6A CASE 1]	LF	40	60.00	2,400.00
16	17305	MINOR CONCRETE (CURB AND GUTTER) (CRS 201)	LF	5,000	50.00	250,000.00
17	017310	MINOR CONCRETE (DRIVEWAY APPROACH) (CRS 207)	EA	27	20.00	540.00
18	731521	MINOR CONCRETE (SIDEWALK)	SQFT	27,000	9.00	243,000.00
19	017306	MINOR CONCRETE (CURB RAMP) (CRS 403)	EA	16	4,500.00	72,000.00
20	017317	MINOR CONCRETE (CROSS-GUTTER AND SPANDREL)	SQFT	2,600	27.00	70,200.00
21	730010	MINOR CONCRETE (CURB) [SIDEWALK RETAINING CURB]	LF	2,050	30.00	61,500.00

Contract (Continued)

ITEM No.	ITEM CODE	ITEM	UNIT	ESTIMATED QUANTITY	ITEM PRICE (IN FIGURES)	TOTAL (IN FIGURES)
BASE BID SCHEDULE – El Toro Road / Dexter Avenue Sidewalk (continued)						
22	190185	SHOULDER BACKING	LF	6,500	5.00	32,500.00
23	017003	CATCH BASIN (CURB INLET) (CRS 300)	EA	2	5,000.00	10,000.00
24	017004	CATCH BASIN (COMBINATION INLET) (CRS 301 - No. 1)	EA	3	7,500.00	22,500.00
25	152607	MODIFY CATCH BASIN	EA	2	5,000.00	10,000.00
26	017105	JUNCTION STRUCTURE (RCFC&WCDS JS 227)	EA	4	4,000.00	16,000.00
27	665018	18" CORRUGATED STEEL PIPE (.109" THICK)	LF	300	200.00	60,000.00
28	731656	CURB RAMP DETECTABLE WARNING SURFACE	EA	2	1,000.00	2,000.00
29	037301	REMOVE EXISTING HARDSCAPE AND REPLACE IN KIND	LS	1	5,000.00	5,000.00
30	782110	RESET MAILBOX	EA	5	450.00	2,250.00
31	820250	REMOVE ROADSIDE SIGN	EA	15	500.00	7,500.00
32	820610	RELOCATE ROADSIDE SIGN [AND POST]	EA	10	600.00	6,000.00
33	820840	ROADSIDE SIGN - ONE POST	EA	21	650.00	13,650.00
34	820860	INSTALL SIGN [STRAP AND SADDLE BRACKET METHOD]	EA	4	500.00	2,000.00
35	840515	THERMOPLASTIC PAVEMENT MARKING	SQFT	850	5.00	4,250.00
36	840656	PAINT TRAFFIC STRIPE (2-COAT)	LF	7,000	1.00	7,000.00
37	810230(F)	PAVEMENT MARKER (RETROREFLECTIVE)	EA	450	5.00	2,250.00
38	150717	REMOVE TRAFFIC STRIPE AND PAVEMENT MARKING	SQFT	3,500	3.00	10,500.00
39	870700	FLASHING BEACON SYSTEM (2 LOCATIONS)	LS	1	25,000.00	25,000.00
40	010602	MISCELLANEOUS WORK (AS DIRECTED)	FA	1	120,000.00	120,000.00

PROJECT TOTAL: **One million, five hundred five thousand, ninety dollars and zero cents** **$1,505,090.00**
ITEMS 1- 40 "WORDS"

El Toro Road / Dexter Avenue
Sidewalk Project
Carmela Court to 680-Feet North of Central Avenue
Community of Warm Springs
Project No. D0-0014
State Project No. ATPSB1L-5956(275)

IN WITNESS WHEREOF the parties hereto have executed this Contract as of the date set forth below.

COUNTY OF RIVERSIDE

BY: _____
JEFF HEWITT
Chair, Board of Supervisors

DATED: MAY 10 2022

ATTEST:

Kecia R. Harper, Clerk of the Board

BY: _____
Deputy

FORM APPROVED COUNTY COUNSEL
BY: _____
DANIELLE D. MALAND

S&H CIVILWORKS

BY: _____

TITLE: JESSE SUTTO / PRESIDENT
(If Corporation, affix Seal)

ATTEST:

_____

TITLE: SECRETARY

Licensed in accordance with an act providing for the registration of Contractors,

License No.: 1008640

Federal Employer Identification Number:

47-5560185

Department of Industrial Relations Registration Number:

1000034468

BY _____
"County"

_____
"Corporation"
(Seal)

S&H CIVILWORKS CORPORATE SEAL 08/24/2015 CALIFORNIA

El Toro Road / Dexter Avenue
Sidewalk Project
Carmela Court to 680-Feet North of Central Avenue
Community of Warm Springs
Project No. D0-0014
State Project No. ATPSB1L-5956(275)

IN WITNESS WHEREOF the parties hereto have executed this Contract as of the date set forth below.

COUNTY OF RIVERSIDE

BY: _____ _____

Chair, Board of Supervisors

DATED: _____

ATTEST:

Kecia R. Harper, Clerk of the Board

BY: _____

Deputy

S&H CIVILWORKS

BY: _____

TITLE: JESSE SUTTO / PRESIDENT
(If Corporation, affix Seal)

ATTEST:

_____

TITLE: SECRETARY

Licensed in accordance with an act providing for the registration of Contractors,

License No.: 1008640.

Federal Employer Identification Number:

47-5560185.

Department of Industrial Relations Registration Number:

1000034468.

BY _____
"County"

_____
"Corporation"
(Seal)

S&H CIVIL WORKS CORPORATE SEAL 08/24/2015 CALIFORNIA

CIVILWORKS

BOARD RESOLUTION OF S&H CIVILWORKS
TO NEGOCIATE AND BID CONTRACTS

DULY PASSED ON MARCH 18, 2016

NEGOTIATION OF CONTRACT AND BIDDING

RESOLVED, that the President of **S&H CIVILWORKS** hereby authorized and empowered to enter into a contract and provide bids for public works projects and government agencies, in the name of and in behalf of this Corporation, upon such terms and conditions as may be agreed upon, at the sole discretion of the President.

RESOLVED FURTHER, that any actions taken by such officers prior to the date of the foregoing resolutions adopted hereby that are within the authority conferred thereby are hereby ratified, confirmed and approved as the acts and deeds of this corporation.

It is hereby certified by the undersigned that the foregoing resolution was duly passed by the Board of Directors of the above-named Company on the 18th day of March 2016, in accordance with the Memorandum or By-Laws and Articles of Incorporation of the Company and the laws and by-laws governing the Company and that the said resolution has been duly recorded in the Minute Book and is in full force and effect.

President

Vice President /Secretary

1801 Hilltop Drive, Colton CA 92324 Office: (909) 206-1181 Fax: (909) 498-8021

Payment Bond

(Public Works - Civil Code §9550 et seq.)

The makers of this Bond are **S&H Civilworks** as Principal and Original Contractor and _____ , a corporation, authorized to issue Surety Bonds in California, as Surety, and this Bond is issued in conjunction with that certain public works contract to be executed between Principal and COUNTY OF RIVERSIDE a public entity, as Owner, for **$1,505,090.00 (One million, five hundred five thousand, ninety dollars and zero cents)** the total amount payable. The amount of this bond is one hundred percent (100%) of said sum. Said contract is for public work generally consisting of **El Toro Road/Dexter Avenue Sidewalk Project, Carmela Court to 680-Feet North of Central Avenue, Community of Warm Springs, Project No. D0-0014, State Project No. ATPSB1L-5956(275)**.

The beneficiaries of this Bond are as is stated in 9554 of the Civil Code and requirements and conditions of this Bond are as is set forth in 9554, 9558, 9560 and 9564 of said code. Without notice, Surety consents to extension of time for performance, change in requirements, amount of compensation, or prepayment under said contract.

Dated: _____

_____
Original Contractor – Principal

_____
Surety

By _____

By _____

Title _____

Its Attorney In Fact

(If corporation, affix seal)

(Corporate Seal)

(Corporate Seal)

STATE
OF _____
COUNTY
OF_____ } ss. SURETY'S ACKNOWLEDGEMENT

On _____ before me, _____ personally appeared, _____, known to me, or proved to me on the basis of satisfactory evidence, to be the person whose name is subscribed to the within instrument and acknowledged to me that he executed the same in his authorized capacities, and that by his signature on the instrument the person, or the entity upon behalf of which the person acted, executed the instrument.

WITNESS my hand and official seal.

_____
Signature of Notary Public

Notary Public (Seal)

NOTE: This Bond must be executed by both parties with corporate seal affixed. All signatures must be acknowledged. (Attach acknowledgements).

V.060719

Performance Bond

Recitals:

1. **S&H Civilworks** (Contractor) has entered into a Contract with COUNTY OF RIVERSIDE (County) for construction of public work known as **El Toro Road/Dexter Avenue Sidewalk Project, Carmela Court to 680-Feet North of Central Avenue, Community of Warm Springs, Project No. D0-0014, State Project No. ATPSB1L-5956(275)**.

2. _____, a _____ corporation (Surety), is the Surety under this Bond.

Agreement:

We, Contractor as Principal and Surety as Surety, jointly and severally agree, state, and are bound unto County, as obligee, as follows:

1. The amount of the obligation of this Bond is 100% of the estimated contract price for the Project of $**1,505,090.00 (One million, five hundred five thousand, ninety dollars and zero cents)** and inures to the benefit of County.

2. This Bond is exonerated by Contractor doing all things to be kept and performed by it in strict conformance with the Contract Documents for this project, otherwise it remains in full force and effect for the recovery of loss, damage and expense of County resulting from failure of Contractor to so act. All of said Contract Documents are incorporated herein.

3. This obligation is binding on our successors and assigns.

4. For value received, Surety stipulates and agrees that no change, time extension, prepayment to Contractor, alteration or addition to the terms and requirements of the Contract Documents or the work to be performed thereunder shall affect its obligations hereunder and waives notice as to such matters, except the total contract price cannot be increased by more than 10% without approval of Surety.

THIS BOND is executed as of _____.

By _____ By _____

By _____ Type Name _____

Its Attorney in Fact
"Surety"

Title _____

"Contractor"

(Corporate Seal) (Corporate Seal)

NOTE: This Bond must be executed by both parties with corporate seal affixed. All signatures must be acknowledged. (Attach acknowledgements).

V.060719

Executed in Four (4) Original Counterparts

Bond Number: PB03081700544
Premium: $18,551.00
Premium is for contract term and is subject to adjustment based on final contract price

Performance Bond

Recitals:

1. **S&H Civilworks** (Contractor) has entered into a Contract with COUNTY OF RIVERSIDE (County) for construction of public work known as **El Toro Road/Dexter Avenue Sidewalk Project, Carmela Court to 680-Feet North of Central Avenue, Community of Warm Springs, Project No. D0-0014, State Project No. ATPSB1L-5956(275)**.

2. Philadelphia Indemnity Insurance Company, a Pennsylvania corporation (Surety), is the Surety under this Bond.

Agreement:

We, Contractor as Principal and Surety as Surety, jointly and severally agree, state, and are bound unto County, as obligee, as follows:

1. The amount of the obligation of this Bond is 100% of the estimated contract price for the Project of **$1,505,090.00 (One million, five hundred five thousand, ninety dollars and zero cents)** and inures to the benefit of County.

2. This Bond is exonerated by Contractor doing all things to be kept and performed by it in strict conformance with the Contract Documents for this project, otherwise it remains in full force and effect for the recovery of loss, damage and expense of County resulting from failure of Contractor to so act. All of said Contract Documents are incorporated herein.

3. This obligation is binding on our successors and assigns.

4. For value received, Surety stipulates and agrees that no change, time extension, prepayment to Contractor, alteration or addition to the terms and requirements of the Contract Documents or the work to be performed thereunder shall affect its obligations hereunder and waives notice as to such matters, except the total contract price cannot be increased by more than 10% without approval of Surety.

THIS BOND is executed as of March 25, 2022.

S&H Civilworks

By _____

By _____

Title PRESIDENT

"Contractor"

(Corporate Seal)

S&H CIVILWORKS CORPORATE SEAL 08/24/2015 CALIFORINA

Philadelphia Indemnity Insurance Company

By Laurie B. Druck

Type Name Laurie B. Druck

Its Attorney in Fact
"Surety"

(Corporate Seal)

NOTE: **This Bond must be executed by both parties with corporate seal affixed. All signatures must be acknowledged.** (Attach acknowledgements).

V.060719

ACKNOWLEDGMENT

A notary public or other officer completing this certificate verifies only the identity of the individual who signed the document to which this certificate is attached, and not the truthfulness, accuracy, or validity of that document.

State of California
County of San Bernardino)

On March 28, 2022 before me, Jaspreet Kaur,Notary Public
(insert name and title of the officer)

personally appeared JESS SOTTO,
who proved to me on the basis of satisfactory evidence to be the person(~~s~~) whose name(~~s~~) is/~~are~~ subscribed to the within instrument and acknowledged to me that he/~~she/they~~ executed the same in his/~~her/their~~ authorized capacity(~~ies~~), and that by his/~~her/their~~ signature(~~s~~) on the instrument the person(~~s~~), or the entity upon behalf of which the person(~~s~~) acted, executed the instrument.

I certify under PENALTY OF PERJURY under the laws of the State of California that the foregoing paragraph is true and correct.

WITNESS my hand and official seal.

RSE1 JASPREET KAUR
COMM. #2250547
NOTARY PUBLIC - CALIFORNIA
SAN BERNARDINO COUNTY
My Comm. Expires Aug. 16, 2022 RSE1

Signature Jaspreet Kaur **(Seal)**

CALIFORNIA ALL-PURPOSE ACKNOWLEDGEMENT

A notary public or other officer completing this certificate verifies only the identity of the individual who signed the document to which this certificate is attached, and not the truthfulness, accuracy, or validity of that document.

State of California
County of San Bernardino) ss.

On MAR 2 5 2022 before me, Rebecca Elizabeth Adcock, Notary Public
Name and Title of Officer (e.g., "Jane Doe, Notary Public")

personally appeared Laurie B. Druck
Name(s) of Signer(s)

who proved to me on the basis of satisfactory evidence to be the person whose name is subscribed to the within instrument and acknowledged to me that she executed the same in her authorized capacity, and that by her signature on the instrument the person, or the entity upon behalf of which the person acted, executed the instrument.

Rebecca Elizabeth Adcock
COMMISSION # 2327252
NOTARY PUBLIC - CALIFORNIA
SAN BERNARDINO COUNTY
My Comm. Expires: 3-May-2024

I certify under PENALTY OF PERJURY under the laws of the State of California that the foregoing paragraph is true and correct.

WITNESS my hand and official seal.

Signature of Notary Public

OPTIONAL

Though the information below is not required by law, it may prove valuable to persons relying on the document and could prevent fraudulent removal and reattachment of this form to another document.

Description of Attached Document

Title or Type of Document: _____
Document Date: _____ Number of Pages: _____
Signer(s) Other Than Named Above: _____

Capacity(ies) Claimed by Signer(s)

Signer's Name: _____

RT THUMBPRINT OF SIGNER
Top of thumb here

❒ Individual
❒ Corporate Officer
Title _____
❒ Partner -- ❒ Limited ❒ General
❒ Attorney-in-Fact
❒ Trustee
❒ Guardian or Conservator
Other: _____

Signer is Representing:

_____

_____

STATE OF CALIFORNIA

DEPARTMENT OF INSURANCE **Nº** 07927

SAN FRANCISCO

Amended

Certificate of Authority

THIS IS TO CERTIFY *THAT, Pursuant to the Insurance Code of the State of California,*

Philadelphia Indemnity Insurance Company

of Bala Cynwyd, Pennsylvania *, organized under the laws of* Pennsylvania *, subject to its Articles of Incorporation or other fundamental organizational documents, is hereby authorized to transact within the State, subject to all provisions of this Certificate, the following classes of insurance:*

Fire, Marine, Surety, Plate Glass,

Liability, Boiler and Machinery, Burglary,

Sprinkler, Automobile, and Miscellaneous

as such classes are now or may hereafter be defined in the Insurance Laws of the State of California.

THIS CERTIFICATE *is expressly conditioned upon the holder hereof now and hereafter being in full compliance with all, and not in violation of any, of the applicable laws and lawful requirements made under authority of the laws of the State of California as long as such laws or requirements are in effect and applicable, and as such laws and requirements now are, or may hereafter be changed or amended.*

IN WITNESS WHEREOF, *effective as of the* 14th *day of* October, 2004, *I have hereunto set my hand and caused my official seal to be affixed this* 14th *day of* October, 2004.

John Garamendi
Insurance Commissioner

By

Victoria S. Sidbury
for Ida Zodrow
Asst. Chief Deputy

NOTICE:
Qualification with the Secretary of State must be accomplished as required by the California Corporations Code promptly after issuance of this Certificate of Authority. Failure to do so will be a violation of Insurance Code Section 701 and will be grounds for revoking this Certificate of Authority pursuant to the convenants made in the application therefor and the conditions contained herein.

FORM CB-3

OSP 00 39391

PHILADELPHIA INDEMNITY INSURANCE COMPANY
One Bala Plaza, Suite 100
Bala Cynwyd, PA 19004-0950

Power of Attorney

KNOW ALL PERSONS BY THESE PRESENTS: That **PHILADELPHIA INDEMNITY INSURANCE COMPANY** (the Company), a corporation organized and existing under the laws of the Commonwealth of Pennsylvania, does hereby constitute and appoint **Jay P. Freeman, Cynthia J. Young, Laurie B. Druck, Christina Mountz and Cynthia J. Russell of Alliant Insurance Services, Inc.**, its true and lawful Attorney-in-fact with full authority to execute on its behalf bonds, undertakings, recognizances and other contracts of indemnity and writings obligatory in the nature thereof, issued in the course of its business and to bind the Company thereby, in an amount not to exceed **$25,000,000.**

This Power of Attorney is granted and is signed and sealed by facsimile under and by the authority of the following Resolution adopted by the Board of Directors of PHILADELPHIA INDEMNITY INSURANCE COMPANY on the 14th of November, 2016.

RESOLVED: That the Board of Directors hereby authorizes the President or any Vice President of the Company: (1) Appoint Attorney(s) in Fact and authorize the Attorney(s) in Fact to execute on behalf of the Company bonds and undertakings, contracts of indemnity and other writings obligatory in the nature thereof and to attach the seal of the Company thereto; and (2) to remove, at any time, any such Attorney-in-Fact and revoke the authority given. And, be it

FURTHER RESOLVED: That the signatures of such officers and the seal of the Company may be affixed to any such Power of Attorney or certificate relating thereto by facsimile, and any such Power of Attorney so executed and certified by facsimile signatures and facsimile seal shall be valid and binding upon the Company in the future with respect to any bond or undertaking to which it is attached.

IN TESTIMONY WHEREOF, PHILADELPHIA INDEMNITY INSURANCE COMPANY HAS CAUSED THIS INSTRUMENT TO BE SIGNED AND ITS CORPORATE SEALTO BE AFFIXED BY ITS AUTHORIZED OFFICE THIS 5TH DAY OF MARCH, 2021.

(Seal)

John Glomb, President & CEO
Philadelphia Indemnity Insurance Company

On this 5th day of March, 2021 before me came the individual who executed the preceding instrument, to me personally known, and being by me duly sworn said that he is the therein described and authorized officer of the **PHILADELPHIA INDEMNITY INSURANCE COMPANY**; that the seal affixed to said instrument is the Corporate seal of said Company; that the said Corporate Seal and his signature were duly affixed.

Commonwealth of Pennsylvania - Notary Seal
Vanessa Mckenzie, Notary Public
Montgomery County
My commission expires November 3, 2024
Commission number 1366394
Member, Pennsylvania Association of Notaries

Notary Public: Vanessa McKenzie

residing at: Bala Cynwyd, PA

My commission expires: November 3, 2024

I, Edward Sayago, Corporate Secretary of PHILADELPHIA INDEMNITY INSURANCE COMPANY, do hereby certify that the foregoing resolution of the Board of Directors and the Power of Attorney issued pursuant thereto on the 5th day March, 2021 are true and correct and are still in full force and effect. I do further certify that John Glomb, who executed the Power of Attorney as President, was on the date of execution of the attached Power of Attorney the duly elected President of PHILADELPHIA INDEMNITY INSURANCE COMPANY.

In Testimony Whereof I have subscribed my name and affixed the facsimile seal of each Company this 25th day of March, 2022

Edward Sayago, Corporate Secretary
PHILADELPHIA INDEMNITY INSURANCE COMPANY

CALIFORNIA DEPARTMENT OF INSURANCE

Company Profile
- Company Search
- Company Search Results
- Company Information
- Old Company Names
- Agent for Service
- Reference Information
- NAIC Group List
- Lines of Business
- Workers' Compensation Complaint and Request for Action/Appeals Contact Information

Financial Statements PDF's
- Annual Statements
- Quarterly Statements

Company Complaint
- Company Performance & Comparison Data
- Company Enforcement Action
- Composite Complaints Studies

Additional Info
- Find A Company Representative In Your Area
- View Financial Disclaimer

COMPANY PROFILE

Company Information

PHILADELPHIA INDEMNITY INSURANCE COMPANY

ONE BALA PLAZA SUITE 100
BALA CYNWYD, PA 19004
877-438-7459

Old Company Names **Effective Date**

Agent For Service

Vivian Imperial
818 WEST SEVENTH STREET
SUITE 930
LOS ANGELES CA 90017

Reference Information

NAIC #:	18058
California Company ID #:	3576-6
Date Authorized in California:	01/27/1993
License Status:	UNLIMITED-NORMAL
Company Type:	Property & Casualty
State of Domicile:	PENNSYLVANIA

back to top

NAIC Group List

NAIC Group #: 3098 Tokio Marine Holdings Inc GRP

Lines Of Business

The company is authorized to transact business within these lines of insurance. For an explanation of any of these terms, please refer to the glossary.

AUTOMOBILE
BOILER AND MACHINERY
BURGLARY
COMMON CARRIER LIABILITY
DISABILITY
FIRE
LIABILITY
MARINE
MISCELLANEOUS
PLATE GLASS
SPRINKLER
SURETY
TEAM AND VEHICLE

Executed in Four (4) Original Counterparts

Bond Number: PB03081700544
Premium included in charge for Performance Bond

Payment Bond

(Public Works - Civil Code §9550 et seq.)

The makers of this Bond are **S&H Civilworks** as Principal and Original Contractor and Philadelphia Indemnity Insurance Company, a corporation, authorized to issue Surety Bonds in California, as Surety, and this Bond is issued in conjunction with that certain public works contract to be executed between Principal and COUNTY OF RIVERSIDE a public entity, as Owner, for **$1,505,090.00 (One million, five hundred five thousand, ninety dollars and zero cents)** the total amount payable. The amount of this bond is one hundred percent (100%) of said sum. Said contract is for public work generally consisting of **El Toro Road/Dexter Avenue Sidewalk Project, Carmela Court to 680-Feet North of Central Avenue, Community of Warm Springs, Project No. D0-0014, State Project No. ATPSB1L-5956(275)**.

The beneficiaries of this Bond are as is stated in 9554 of the Civil Code and requirements and conditions of this Bond are as is set forth in 9554, 9558, 9560 and 9564 of said code. Without notice, Surety consents to extension of time for performance, change in requirements, amount of compensation, or prepayment under said contract.

Dated: March 25, 2022

S&H Civilworks
Original Contractor—Principal

Philadelphia Indemnity Insurance Company
Surety

By _____

By Laurie B. Druck
Laurie B. Druck
Its Attorney In Fact

Title PRESIDENT

(If corporation, affix seal)

(Corporate Seal)

(Corporate Seal)

STATE OF _____
COUNTY OF _____ } ss. SURETY'S ACKNOWLEDGEMENT

On _____ before me, _____ personally appeared, _____, known to me, or proved to me on the basis of satisfactory evidence, to be the person whose name is subscribed to the within instrument and acknowledged to me that he executed the same in his authorized capacities, and that by his signature on the instrument the person, or the entity upon behalf of which the person acted, executed the instrument.

WITNESS my hand and official seal.

_____
Signature of Notary Public

Notary Public (Seal)

NOTE: This Bond must be executed by both parties with corporate seal affixed. All signatures must be acknowledged. (Attach acknowledgements).

V.060719

CALIFORNIA ALL-PURPOSE ACKNOWLEDGEMENT

A notary public or other officer completing this certificate verifies only the identity of the individual who signed the document to which this certificate is attached, and not the truthfulness, accuracy, or validity of that document.

State of California
County of San Bernardino) ss.

On MAR 2 5 2022 before me, Rebecca Elizabeth Adcock, Notary Public
Name and Title of Officer (e.g., "Jane Doe, Notary Public")

personally appeared Laurie B. Druck
Name(s) of Signer(s)

who proved to me on the basis of satisfactory evidence to be the person whose name is subscribed to the within instrument and acknowledged to me that she executed the same in her authorized capacity, and that by her signature on the instrument the person, or the entity upon behalf of which the person acted, executed the instrument.

Rebecca Elizabeth Adcock
COMMISSION # 2327252
NOTARY PUBLIC - CALIFORNIA
SAN BERNARDINO COUNTY
My Comm. Expires: 3-May-2024

I certify under PENALTY OF PERJURY under the laws of the State of California that the foregoing paragraph is true and correct.

WITNESS my hand and official seal.

Signature of Notary Public

OPTIONAL

Though the information below is not required by law, it may prove valuable to persons relying on the document and could prevent fraudulent removal and reattachment of this form to another document.

Description of Attached Document

Title or Type of Document: _____
Document Date: _____ Number of Pages: _____
Signer(s) Other Than Named Above: _____

Capacity(ies) Claimed by Signer(s)

Signer's Name: _____

RT THUMBPRINT OF SIGNER
Top of thumb here

- ❒ Individual
- ❒ Corporate Officer
  Title _____
- ❒ Partner -- ❒ Limited ❒ General
- ❒ Attorney-in-Fact
- ❒ Trustee
- ❒ Guardian or Conservator

Other: _____

Signer is Representing:

_____

_____

ACKNOWLEDGMENT

A notary public or other officer completing this certificate verifies only the identity of the individual who signed the document to which this certificate is attached, and not the truthfulness, accuracy, or validity of that document.

State of California
County of San Bernardino)

On March 28, 2022 before me, Jaspreet Kaur,Notary Public
(insert name and title of the officer)

personally appeared JESS SOTTO,
who proved to me on the basis of satisfactory evidence to be the person(~~s~~) whose name(~~s~~) is/~~are~~ subscribed to the within instrument and acknowledged to me that he/~~she/they~~ executed the same in his/~~her/their~~ authorized capacity(~~ies~~), and that by his/~~her/their~~ signature(~~s~~) on the instrument the person(~~s~~), or the entity upon behalf of which the person(~~s~~) acted, executed the instrument.

I certify under PENALTY OF PERJURY under the laws of the State of California that the foregoing paragraph is true and correct.

WITNESS my hand and official seal.

RSE1 JASPREET KAUR
COMM. #2250547
NOTARY PUBLIC - CALIFORNIA
SAN BERNARDINO COUNTY
My Comm. Expires Aug. 16, 2022 RSE1

Signature Jaspreet Kaur (Seal)

STATE OF CALIFORNIA

DEPARTMENT OF INSURANCE **№ 07927**

SAN FRANCISCO

Amended

Certificate of Authority

THIS IS TO CERTIFY *THAT, Pursuant to the Insurance Code of the State of California,*

Philadelphia Indemnity Insurance Company

of Bala Cynwyd, Pennsylvania *, organized under the laws of* Pennsylvania *, subject to its Articles of Incorporation or other fundamental organizational documents, is hereby authorized to transact within the State, subject to all provisions of this Certificate, the following classes of insurance:*

Fire, Marine, Surety, Plate Glass,

Liability, Boiler and Machinery, Burglary,

Sprinkler, Automobile, and Miscellaneous

as such classes are now or may hereafter be defined in the Insurance Laws of the State of California.

THIS CERTIFICATE *is expressly conditioned upon the holder hereof now and hereafter being in full compliance with all, and not in violation of any, of the applicable laws and lawful requirements made under authority of the laws of the State of California as long as such laws or requirements are in effect and applicable, and as such laws and requirements now are, or may hereafter be changed or amended.*

IN WITNESS WHEREOF, *effective as of the* 14th *day of* October, 2004, *I have hereunto set my hand and caused my official seal to be affixed this* 14th *day of* October, 2004.

John Garamendi
Insurance Commissioner

By

Victoria S. Sidbury
for Ida Zodrow
Asst. Chief Deputy

NOTICE:

Qualification with the Secretary of State must be accomplished as required by the California Corporations Code promptly after issuance of this Certificate of Authority. Failure to do so will be a violation of Insurance Code Section 701 and will be grounds for revoking this Certificate of Authority pursuant to the convenants made in the application therefor and the conditions contained herein.

FORM CB-3

OSP 00 39391

PHILADELPHIA INDEMNITY INSURANCE COMPANY
One Bala Plaza, Suite 100
Bala Cynwyd, PA 19004-0950

Power of Attorney

KNOW ALL PERSONS BY THESE PRESENTS: That **PHILADELPHIA INDEMNITY INSURANCE COMPANY** (the Company), a corporation organized and existing under the laws of the Commonwealth of Pennsylvania, does hereby constitute and appoint **Jay P. Freeman, Cynthia J. Young, Laurie B. Druck, Christina Mountz and Cynthia J. Russell of Alliant Insurance Services, Inc.,** its true and lawful Attorney-in-fact with full authority to execute on its behalf bonds, undertakings, recognizances and other contracts of indemnity and writings obligatory in the nature thereof, issued in the course of its business and to bind the Company thereby, in an amount not to exceed **$25,000,000.**

This Power of Attorney is granted and is signed and sealed by facsimile under and by the authority of the following Resolution adopted by the Board of Directors of PHILADELPHIA INDEMNITY INSURANCE COMPANY on the 14th of November, 2016.

RESOLVED: That the Board of Directors hereby authorizes the President or any Vice President of the Company: (1) Appoint Attorney(s) in Fact and authorize the Attorney(s) in Fact to execute on behalf of the Company bonds and undertakings, contracts of indemnity and other writings obligatory in the nature thereof and to attach the seal of the Company thereto; and (2) to remove, at any time, any such Attorney-in-Fact and revoke the authority given. And, be it

FURTHER RESOLVED: That the signatures of such officers and the seal of the Company may be affixed to any such Power of Attorney or certificate relating thereto by facsimile, and any such Power of Attorney so executed and certified by facsimile signatures and facsimile seal shall be valid and binding upon the Company in the future with respect to any bond or undertaking to which it is attached.

IN TESTIMONY WHEREOF, PHILADELPHIA INDEMNITY INSURANCE COMPANY HAS CAUSED THIS INSTRUMENT TO BE SIGNED AND ITS CORPORATE SEALTO BE AFFIXED BY ITS AUTHORIZED OFFICE THIS 5TH DAY OF MARCH, 2021.

(Seal)

John Glomb, President & CEO
Philadelphia Indemnity Insurance Company

On this 5th day of March, 2021 before me came the individual who executed the preceding instrument, to me personally known, and being by me duly sworn said that he is the therein described and authorized officer of the **PHILADELPHIA INDEMNITY INSURANCE COMPANY**; that the seal affixed to said instrument is the Corporate seal of said Company; that the said Corporate Seal and his signature were duly affixed.

Commonwealth of Pennsylvania - Notary Seal
Vanessa Mckenzie, Notary Public
Montgomery County
My commission expires November 3, 2024
Commission number 1366394
Member, Pennsylvania Association of Notaries

Notary Public: Vanessa McKenzie

residing at: Bala Cynwyd, PA

My commission expires: November 3, 2024

I, Edward Sayago, Corporate Secretary of PHILADELPHIA INDEMNITY INSURANCE COMPANY, do hereby certify that the foregoing resolution of the Board of Directors and the Power of Attorney issued pursuant thereto on the 5th day March, 2021 are true and correct and are still in full force and effect. I do further certify that John Glomb, who executed the Power of Attorney as President, was on the date of execution of the attached Power of Attorney the duly elected President of PHILADELPHIA INDEMNITY INSURANCE COMPANY.

In Testimony Whereof I have subscribed my name and affixed the facsimile seal of each Company this 25th day of March 2022

Edward Sayago, Corporate Secretary
PHILADELPHIA INDEMNITY INSURANCE COMPANY

CALIFORNIA DEPARTMENT OF INSURANCE

COMPANY PROFILE

Company Information

PHILADELPHIA INDEMNITY INSURANCE COMPANY

ONE BALA PLAZA SUITE 100
BALA CYNWYD, PA 19004
877-438-7459

Old Company Names **Effective Date**

Agent For Service

Vivian Imperial
818 WEST SEVENTH STREET
SUITE 930
LOS ANGELES CA 90017

Reference Information

NAIC #:	18058
California Company ID #:	3576-6
Date Authorized in California:	01/27/1993
License Status:	UNLIMITED-NORMAL
Company Type:	Property & Casualty
State of Domicile:	PENNSYLVANIA

back to top

NAIC Group List

NAIC Group #: 3098 Tokio Marine Holdings Inc GRP

Lines Of Business

The company is authorized to transact business within these lines of insurance. For an explanation of any of these terms, please refer to the glossary.

AUTOMOBILE
BOILER AND MACHINERY
BURGLARY
COMMON CARRIER LIABILITY
DISABILITY
FIRE
LIABILITY
MARINE
MISCELLANEOUS
PLATE GLASS
SPRINKLER
SURETY
TEAM AND VEHICLE

S&HCIVI-01 MAXU

CERTIFICATE OF LIABILITY INSURANCE

DATE (MM/DD/YYYY) 3/28/2022

THIS CERTIFICATE IS ISSUED AS A MATTER OF INFORMATION ONLY AND CONFERS NO RIGHTS UPON THE CERTIFICATE HOLDER. THIS CERTIFICATE DOES NOT AFFIRMATIVELY OR NEGATIVELY AMEND, EXTEND OR ALTER THE COVERAGE AFFORDED BY THE POLICIES BELOW. THIS CERTIFICATE OF INSURANCE DOES NOT CONSTITUTE A CONTRACT BETWEEN THE ISSUING INSURER(S), AUTHORIZED REPRESENTATIVE OR PRODUCER, AND THE CERTIFICATE HOLDER.

IMPORTANT: If the certificate holder is an ADDITIONAL INSURED, the policy(ies) must have ADDITIONAL INSURED provisions or be endorsed. If SUBROGATION IS WAIVED, subject to the terms and conditions of the policy, certain policies may require an endorsement. A statement on this certificate does not confer rights to the certificate holder in lieu of such endorsement(s).

PRODUCER License # 0C36861
Inland Empire-Alliant Insurance Services, Inc.
685 Carnegie Dr Ste 265
San Bernardino, CA 92408

CONTACT NAME: Christina M Mountz
PHONE (A/C, No, Ext): (909) 886-9861 FAX (A/C, No): (909) 886-2013
E-MAIL ADDRESS: cmountz@alliant.com

INSURER(S) AFFORDING COVERAGE	NAIC #
INSURER A : XL Insurance America, Inc.	24554
INSURER B : Greenwich Insurance Company	22322
INSURER C : Transverse Insurance Company	21075
INSURER D :	
INSURER E :	
INSURER F :	

INSURED
S & H Civilworks
1801 Hilltop Drive
Colton, CA 92324

COVERAGES **CERTIFICATE NUMBER:** **REVISION NUMBER:**

THIS IS TO CERTIFY THAT THE POLICIES OF INSURANCE LISTED BELOW HAVE BEEN ISSUED TO THE INSURED NAMED ABOVE FOR THE POLICY PERIOD INDICATED. NOTWITHSTANDING ANY REQUIREMENT, TERM OR CONDITION OF ANY CONTRACT OR OTHER DOCUMENT WITH RESPECT TO WHICH THIS CERTIFICATE MAY BE ISSUED OR MAY PERTAIN, THE INSURANCE AFFORDED BY THE POLICIES DESCRIBED HEREIN IS SUBJECT TO ALL THE TERMS, EXCLUSIONS AND CONDITIONS OF SUCH POLICIES. LIMITS SHOWN MAY HAVE BEEN REDUCED BY PAID CLAIMS.

INSR LTR	TYPE OF INSURANCE	ADDL INSD	SUBR WVD	POLICY NUMBER	POLICY EFF (MM/DD/YYYY)	POLICY EXP (MM/DD/YYYY)	LIMITS	
A	X COMMERCIAL GENERAL LIABILITY CLAIMS-MADE X OCCUR GEN'L AGGREGATE LIMIT APPLIES PER POLICY X PRO-JECT LOC OTHER:	X	X	NGL-1005666-00	2/15/2022	2/15/2023	EACH OCCURRENCE $ DAMAGE TO RENTED PREMISES (Ea occurrence) $ MED EXP (Any one person) $ PERSONAL & ADV INJURY $ GENERAL AGGREGATE $ PRODUCTS - COMP/OP AGG $ $	1,000,000 300,000 5,000 1,000,000 2,000,000 2,000,000
B	AUTOMOBILE LIABILITY X ANY AUTO OWNED AUTOS ONLY SCHEDULED AUTOS X HIRED AUTOS ONLY X NON-OWNED AUTOS ONLY	X	X	NBA-1005667-00	2/15/2022	2/15/2023	COMBINED SINGLE LIMIT (Ea accident) $ BODILY INJURY (Per person) $ BODILY INJURY (Per accident) $ PROPERTY DAMAGE (Per accident) $ $	1,000,000
B	UMBRELLA LIAB X OCCUR X EXCESS LIAB CLAIMS-MADE DED X RETENTION $ 0			NEC-6006780-00	2/15/2022	2/15/2023	EACH OCCURRENCE $ AGGREGATE $ Over GL/AL/EL $	2,000,000 2,000,000
C	WORKERS COMPENSATION AND EMPLOYERS' LIABILITY ANY PROPRIETOR/PARTNER/EXECUTIVE OFFICER/MEMBER EXCLUDED? (Mandatory in NH) Y/N Y If yes, describe under DESCRIPTION OF OPERATIONS below	N/A	X	FOR-WC-000000274-0	2/15/2022	2/15/2023	X PER STATUTE OTH-ER E.L. EACH ACCIDENT $ E.L. DISEASE - EA EMPLOYEE $ E.L. DISEASE - POLICY LIMIT $	1,000,000 1,000,000 1,000,000

DESCRIPTION OF OPERATIONS / LOCATIONS / VEHICLES (ACORD 101, Additional Remarks Schedule, may be attached if more space is required)
Re: Contract #22-02-005, El Toro Road/Dexter Avenue Sidewalk Project, Carmela court to 680-Feet North of Central Avenue, Community of Warm Springs, Project #D0-0014, State Project #ATPSB1L-5956(275)

The County of Riverside, its directors, officers, elected and appointed officials, employees, agents, and representatives, City of Lake Elsinore are Additional Insured with respect to General Liability for the Ongoing and Completed Operations of the Named Insured as required by written contract. Additional insured status applies to Automobile Liability. Waiver of Subrogation applies as indicated above. Excess Liability follows form. See forms attached.

CERTIFICATE HOLDER

County of Riverside
Transportation Department
Attn: Contracts/Bidding Unit
3525 14th Street
Riverside, CA 92501

CANCELLATION

SHOULD ANY OF THE ABOVE DESCRIBED POLICIES BE CANCELLED BEFORE THE EXPIRATION DATE THEREOF, NOTICE WILL BE DELIVERED IN ACCORDANCE WITH THE POLICY PROVISIONS.

AUTHORIZED REPRESENTATIVE
Jay P Freeman

THIS ENDORSEMENT CHANGES THE POLICY. PLEASE READ IT CAREFULLY.

ADDITIONAL INSURED – OWNERS, LESSEES OR CONTRACTORS – SCHEDULED PERSON OR ORGANIZATION

This endorsement modifies insurance provided under the following:

COMMERCIAL GENERAL LIABILITY COVERAGE PART

SCHEDULE

Name Of Additional Insured Person(s) Or Organization(s)	Location(s) Of Covered Operations
Blanket as required by written contract	Blanket as required by written contract
Information required to complete this Schedule, if not shown above, will be shown in the Declarations.	

A. **Section II – Who Is An Insured** is amended to include as an additional insured the person(s) or organization(s) shown in the Schedule, but only with respect to liability for "bodily injury", "property damage" or "personal and advertising injury" caused, in whole or in part, by:

1. Your acts or omissions; or
2. The acts or omissions of those acting on your behalf;

in the performance of your ongoing operations for the additional insured(s) at the location(s) designated above.

However:

1. The insurance afforded to such additional insured only applies to the extent permitted by law; and
2. If coverage provided to the additional insured is required by a contract or agreement, the insurance afforded to such additional insured will not be broader than that which you are required by the contract or agreement to provide for such additional insured.

B. With respect to the insurance afforded to these additional insureds, the following additional exclusions apply:

This insurance does not apply to "bodily injury" or "property damage" occurring after:

1. All work, including materials, parts or equipment furnished in connection with such work, on the project (other than service, maintenance or repairs) to be performed by or on behalf of the additional insured(s) at the location of the covered operations has been completed; or
2. That portion of "your work" out of which the injury or damage arises has been put to its intended use by any person or organization other than another contractor or subcontractor engaged in performing operations for a principal as a part of the same project.

C. With respect to the insurance afforded to these additional insureds, the following is added to **Section III – Limits Of Insurance:**

If coverage provided to the additional insured is required by a contract or agreement, the most we will pay on behalf of the additional insured is the amount of insurance:

1. Required by the contract or agreement; or

2. Available under the applicable limits of insurance;

whichever is less.

This endorsement shall not increase the applicable limits of insurance.

Jay P Freeman

THIS ENDORSEMENT CHANGES THE POLICY. PLEASE READ IT CAREFULLY.

ADDITIONAL INSURED – OWNERS, LESSEES OR CONTRACTORS – COMPLETED OPERATIONS

This endorsement modifies insurance provided under the following:

COMMERCIAL GENERAL LIABILITY COVERAGE PART
PRODUCTS/COMPLETED OPERATIONS LIABILITY COVERAGE PART

SCHEDULE

Name Of Additional Insured Person(s) Or Organization(s)	Location And Description Of Completed Operations
Blanket as required by written contract	Blanket as required by written contract
Information required to complete this Schedule, if not shown above, will be shown in the Declarations.	

A. **Section II – Who Is An Insured** is amended to include as an additional insured the person(s) or organization(s) shown in the Schedule, but only with respect to liability for "bodily injury" or "property damage" caused, in whole or in part, by "your work" at the location designated and described in the Schedule of this endorsement performed for that additional insured and included in the "products-completed operations hazard".

However:

1. The insurance afforded to such additional insured only applies to the extent permitted by law; and
2. If coverage provided to the additional insured is required by a contract or agreement, the insurance afforded to such additional insured will not be broader than that which you are required by the contract or agreement to provide for such additional insured.

B. With respect to the insurance afforded to these additional insureds, the following is added to **Section III – Limits Of Insurance:**

If coverage provided to the additional insured is required by a contract or agreement, the most we will pay on behalf of the additional insured is the amount of insurance:

1. Required by the contract or agreement; or
2. Available under the applicable limits of insurance;

whichever is less.

This endorsement shall not increase the applicable limits of insurance.

Jay P Freeman

THIS ENDORSEMENT CHANGES THE POLICY. PLEASE READ IT CAREFULLY.

PRIMARY AND NONCONTRIBUTORY – OTHER INSURANCE CONDITION

This endorsement modifies insurance provided under the following:

COMMERCIAL GENERAL LIABILITY COVERAGE PART
LIQUOR LIABILITY COVERAGE PART
PRODUCTS/COMPLETED OPERATIONS LIABILITY COVERAGE PART

The following is added to the **Other Insurance** Condition and supersedes any provision to the contrary:

Primary And Noncontributory Insurance

This insurance is primary to and will not seek contribution from any other insurance available to an additional insured under your policy provided that:

(1) The additional insured is a Named Insured under such other insurance; and

(2) You have agreed in writing in a contract or agreement that this insurance would be primary and would not seek contribution from any other insurance available to the additional insured.

Jay P Freeman

ENDORSEMENT #

This endorsement, effective 03/01/21 12:01 a.m., forms a part of

Policy No. NGL-1005666-00

THIS ENDORSEMENT CHANGES THE POLICY. PLEASE READ IT CAREFULLY

XL Plus Endorsement

This endorsement modifies insurance provided under the following:

COMMERCIAL GENERAL LIABILITY COVERAGE PART

GENERAL DESCRIPTION OF COVERAGE - This endorsement broadens coverage. The following listing is a general coverage description only. Limitations and exclusions may apply to these coverages. Read this endorsement carefully to determine rights, duties, and what is and is not covered.

A. Reasonable Force – Bodily Injury or Property Damage

B. Damage To Premises Rented To You Extension

- Perils of fire, lightning, explosion, smoke, aircraft or vehicles, riot or civil commotion, vandalism, leakage from fire extinguishing equipment or water damage
- Limit increased to $300,000

C. Aircraft Chartered with Crew

D. Non-Owned Watercraft

E. Personal and Advertising Injury – Assumed by Insured Contract

F. Increased Supplementary Payments

- Cost for bail bonds increased to $5,000
- Loss of earnings increased to $1,000 per day

G. Broadened Named Insured

H. Blanket Additional Insured – Managers or Lessors of Premises

I. Blanket Additional Insured – Lessor of Leased Equipment

J. Injury to Co-Employees and Co-Volunteer Workers

K. Knowledge and Notice of Occurrence or Offense

L. Unintentional Omission

M. Liberalization

N. Blanket Waiver of Subrogation

O. Incidental Medical Malpractice Injury

P. Extension of Coverage – Bodily Injury

Q. Coverage Territory

A. REASONABLE FORCE – BODILY INJURY OR PROPERTY DAMAGE

Exclusion **a.** Expected Or Intended Injury of Part **2.**, Exclusions of Coverage **A**. Bodily Injury And Property Damage Liability of Section **I** – Coverages is deleted in its entirety and replaced by the following:

[This insurance does not apply to:)

Expected or Intended Injury or Damage

"Bodily injury" or "property damage" expected or intended from the standpoint of the insured. This exclusion does not apply to "bodily injury" or "property damage" resulting from the use of reasonable force to protect persons or property.

B. DAMAGE TO PREMISES RENTED TO YOU EXTENSION

1. The last paragraph of **2.** Exclusions of Coverage **A**. Bodily Injury And Property Damage Liability of Section **I** - Coverages is deleted in its entirety and replaced by the following:

Exclusions **c.** through **n.** do not apply to damages to premises while rented to you, or temporarily occupied by you with permission of the owner, caused by fire, lightning, explosion, smoke, aircraft or vehicles, riot or civil commotion, vandalism, leakage from fire extinguishing equipment or water damage. A separate limit of insurance applies to this coverage as described in Section **III**- Limits of Insurance.

2. This insurance does not apply to damage to premises while rented to you, or temporarily occupied by you with permission of the owner, caused by:

a. Rupture, bursting, or operation of pressure relief devices;

b. Rupture or bursting due to expansion or swelling of the contents of any building or structure, caused by or resulting from water; or

c. Explosion of steam boilers, steam pipes, steam engines, or steam turbines.

3. Paragraph **6.** of Section **III**- Limits of Insurance is deleted in its entirety and replaced by the following:

6.a. Subject to Paragraph **5.** above, the Damage To Premises Rented To You Limit is the most we will pay under Coverage A for damages because of "property damage" to any one premises while rented to you, or temporarily occupied by you with permission of the owner, caused by fire, explosion, lightning, smoke, aircraft or vehicle, riot or civil commotion, vandalism, leakage from fire extinguishing equipment or water damage. The Damage To Premises Rented To You Limit will apply to all damage proximately caused by the same "occurrence", whether such damage results from fire, explosion, lightning, smoke, aircraft or vehicle or riot or civil commotion, vandalism, leakage from fire extinguishing equipment or water damage or any combination of any of these.

b. The Damage to Premises Rented to You Limit will be the higher of:

(1) $300,000; or

(2) The amount shown on the Declarations for Damage to Premises Rented to You Limit.

4. Paragraph **9.a.** of the definition of "insured contract" under Section **V-** Definitions, is deleted in its entirety and replaced by the following:

   ["Insured contract" means:]

   a. A contract for a lease of premises. However, that portion of the contract for a lease of premises that indemnifies any person or organization for damage by fire, lightning, explosion, smoke, aircraft or vehicle, riot or civil commotion, vandalism, leakage from fire extinguishing equipment or water damage to premises while rented to you, or temporarily occupied by you with the permission of the owner is not an "insured contract".

5. This Article **B.** does not apply if coverage for Damage to Premises Rented to You of Coverage **A.** Bodily Injury And Property Damage Liability of Section **I** – Coverages is excluded by endorsement.

C. AIRCRAFT CHARTERED WITH CREW

1. The following is added to the exceptions contained in Exclusion **g.**, Aircraft, Auto or Watercraft in Part **2.**, Exclusions of Coverage **A.** Bodily Injury And Property Damage of Section **I** – Coverages:

   [This exclusion does not apply to:)

   Aircraft chartered with crew to any insured.

2. This Article **C.** does not apply if the chartered aircraft is owned by any insured.

3. The insurance provided by this Article **C.** shall be excess over any valid and collectible insurance available to the insured, whether primary, excess, contingent or on any other basis, except for insurance purchased specifically by you to be excess of this policy.

D. NON-OWNED WATERCRAFT

1. The exception contained in Subparagraph **(2)** of Exclusion **g.** Aircraft. Auto or Watercraft in Part **2.**, Exclusions of Coverage **A.** Bodily Injury And Property Damage Liability of Section **I** – Coverages is deleted in its entirety and replaced by the following:

   (2) A watercraft you do not own that is:

   (a) 50 feet long or less; and

   (b) Not being used to carry persons or property for a charge;

2. This Article **D.** applies to any person who, with your expressed or implied consent, either uses or is responsible for the use of the watercraft.

3. This insurance provided by this Article **D.** shall be excess over any other valid and collectible insurance available to the insured, whether primary, excess, contingent or on any other basis, except for insurance purchased specifically by you to be excess of this policy.

E. PERSONAL AND ADVERTISING INJURY – ASSUMED BY INSURED CONTRACT

1. Exclusion **e.** Contractual Liability in Part **2.**, Exclusions of Coverage **B.** Personal And Advertising Injury Liability of Section **I** – Coverages is deleted in its entirety and replaced by the following:

[This insurance does not apply to:)

e. Contractual Liability

"Personal and Advertising Injury" for which the insured has assumed liability in a contract or agreement. This exclusion does not apply to liability for damages:

1. That the insured would have in the absence of the contract or agreement; or
2. Assumed in a written contract or agreement that is an "insured contract"; provided the "personal and advertising injury" is caused by an offense which occurs subsequent to the execution of the contract or agreement.

2. Subparagraph **f.** of the definition of "insured contract" Section **V.-** Definitions is deleted in its entirety and replaced by the following:

f. That part of any other contract or agreement pertaining to your business, including an indemnification of a municipality in connection for work performed for a municipality, under which you assume the tort liability of anther party to pay for "bodily injury", "property damage" or "personal and advertising injury" to a third party or organization. Tort liability means a liability that would be imposed by law in the absence of any contract or agreement.

2. This Article **E.** does not apply if Coverage **B**. Personal And Advertising Injury Liability is excluded by endorsement.

F. INCREASED SUPPLEMENTARY PAYMENTS

Subparagraphs **1. b.** and **d.** of Supplementary Payments – Coverages **A** And **B** of Section **I** - Coverages are amended as follows:

1. In Subparagraph **b.**, the amount we will pay for the cost of bail bonds is increased up to $5,000.

2. In Subparagraph **d.**, the amount we will pay for a loss of earnings is increased up to $1,000 a day.

G. BROADENED NAMED INSURED

1. The Named Insured in Item **1.** of the Declarations is as follows:

The person or organizations named in Item **1.** of the Declarations and any organization, other than a partnership or joint venture, over which you maintain ownership or majority interest on the effective date of the policy. However, coverage for any such organization will cease as of the date that you no longer maintain ownership of, or majority interest in, such organization.

2. This Article **G.** does not apply to any person or organization for which coverage is excluded by endorsement.

H. BLANKET ADDITIONAL INSURED – MANAGERS OR LESSORS OF PREMISES

1. Section II-Who Is An Insured is amended to include as an insured any person or organization with whom you have agreed in a written contract executed prior to loss (an "additional insured"), but only with respect to liability arising out of the ownership, maintenance or use of that part of any premises leased to you, subject to the following provisions:

   a. Limits of Insurance. The Limits of Insurance afforded to the "additional insured" shall be the limits you agreed to provide, or the limits shown on the Declarations, whichever is less.

   b. The insurance afforded to the "additional insured" does not apply to:

      (1) Any "occurrence" that takes place after you cease to be a tenant in that premises;

      (2) Any premises for which coverage is excluded by endorsement; or

      (3) Structural alterations, new construction or demolition operations performed by or on behalf of such "additional insured".

2. The insurance afforded to the "additional insured" is excess over any valid and collectible insurance available to such "additional insured", unless you have agreed in a written contract for this insurance to apply on a primary or contributory basis.

I. BLANKET ADDITIONAL INSURED – LESSOR OF LEASED EQUIPMENT

1. Section II-Who Is An Insured is amended to include an "additional insured" (as defined in Article H. above), but only with respect to their liability arising out of maintenance, operation or use by you of equipment leased to you by such "additional insured", subject to the following provisions:

   a. Limits of Insurance. The Limits of Insurance afforded to the "additional insured" shall be the limits which you agreed to provide, or the limits shown on the Declarations, whichever is less.

   b. The insurance afforded to the "additional insured" does not apply to:

      (1) Any "occurrence" that takes place after the equipment lease expires; or

      (2) "Bodily injury" or "property damage" arising out of the sole negligence of such additional insured.

2. The insurance provided to the "additional insured" is excess over any valid and collectible insurance available to such "additional insured", unless you have a written contract for this insurance to apply on a primary or contributory basis.

J. INJURY TO CO-EMPLOYEES AND CO-VOLUNTEER WORKERS

1. Section II- Who Is An Insured is amended to include your "employees" as insureds with respect to "bodily injury" to a co-"employee" in the course of the co-"employee's" employment by you, or to your "volunteer workers" while performing duties related to the conduct of your business, provided that this coverage for your "employees" does not apply to acts outside the scope of their employment by you or while performing duties unrelated to the conduct of your business.

2. Section **II** – Who Is An Insured is amended to include your "volunteer workers" as insureds with respect to "bodily injury" to a co-"volunteer worker" while performing duties related to the conduct of your business, or to your "employees" employment by you, provided that this coverage for your "volunteer workers" does not apply while performing duties unrelated to the conduct of your business.

K. KNOWLEDGE AND NOTICE OF OCCURRENCE OR OFFENSE

The following is added to Paragraph **2.,** Duties In The Event of Occurrence, Offense, Claim or Suit of the Section **IV** - Commercial General Liability Conditions:

Notice of an "occurrence" or of an offense which may result in a claim under this insurance shall be given as soon as practicable after knowledge of the "occurrence" or offense has been reported to any insured listed under Paragraph **1.** of Section **II**-Who Is An Insured or any "employee" (such as insurance, loss control, risk manager or administrator) designated by you to give such notice.

Knowledge of any other "employee(s)" of an "occurrence" or of an offense does not imply that you also have such knowledge.

Notice shall be deemed prompt if given in good faith as soon as practicable to your workers compensation insurer. This applies only if you subsequently give notice to us as soon as practicable after any insured listed under Paragraph **1.** of Section **II** – Who Is An Insured or an "employee" (such as an insurance, loss control, or risk manager or administrator) designated by you to give such notice discovers that the "occurrence", offense or claim may involve this policy.

L. UNINTENTIONAL OMISSION

The following is added to Paragraph **6.,** Representations, of Section **IV-** Commercial General Liability Conditions:

The unintentional omission of, or unintentional error in, any information provided by you shall not prejudice your rights under this insurance. However, this Article **L.** does not affect our right to collect additional premium or to exercise our right of cancellation or nonrenewal in accordance with applicable state insurance laws or regulations.

M. LIBERALIZATION

The following is added to Section **IV**-Commercial General Liability Conditions:

Liberalization

After the issuance of this policy, if we adopt a change in our forms or rules which would broaden the coverage provided by any form that is a part of this policy without a premium charge, the broader coverage will apply to this policy. This extension is effective upon the approval of such broader coverage in your state.

N. BLANKET WAIVER OF SUBROGATION

The following is added to Section **IV**-Commercial General Liability Conditions:

Waiver of Subrogation

We waive any right of recovery we may have against any person or organization because of payments we make for injury or damage arising out of premises owned or occupied or rented or loaned to you; ongoing operations performed by you or on your behalf, done under a contract with that person or organization; "your work"; or "your products". We waive this right where you have agreed to do so as part of a written contract, executed by you prior to loss.

O. INCIDENTAL MEDICAL MALPRACTICE INJURY

1. For insurance applicable to this Article O, the definition of "bodily injury" in Section **V** - Definitions is amended to include, "Incidental Medical Malpractice Injury".

2. The following definition is added to Section **V**- Definitions:

"Incidental medical malpractice injury" means "bodily injury", mental anguish, sickness or disease sustained by a person, including death resulting from any of these at any time, arising out of the rendering of, or failure to render, the following services:

a. Medical, surgical, dental, laboratory, x-ray or nursing service or treatment, advice or instruction, or the related furnishing of food or beverages;

b. The furnishing or dispensing of drugs or medical, dental or surgical supplies or appliances;

c. First aid; or

d. "Good Samaritan Services". As used in this Article **O.**, "Good Samaritan Services" are those medical services rendered or provided in an emergency and for which no remuneration is demanded or received.

3. Paragraph **2.a.(1)(d)** of Section **II** -Who Is An Insured does not apply to any registered nurse, licensed practical nurse, emergency medical technician or paramedic employed by you, but only while performing the services described in Paragraph **2.** above and while acting within the scope of their employment by you. Any "employees" rendering "Good Samaritan Services" will be deemed to be acting within the scope of their employment by you.

4. The following exclusion is added to Paragraph **2.** Exclusions of Coverage **A.** – Bodily Injury And Property Damage Liability of Section **I** – Coverages:

[This insurance does not apply to:)

Willful Violation of Penal Statute

Liability arising out of the willful violation of a penal statute or ordinance relating to the sale of pharmaceuticals by or with the knowledge or consent of the insured.

5. For the purposes of determining the applicable Limits of Insurance, any act or omission, together with all related acts or omissions in the furnishing of services described in Paragraph **2.a.** through **2.d.** above to any one person, will be considered one "occurrence".

6. This Article **O.** does not apply if you are in the business or occupation of providing any of the services described in Paragraph **2.** above.

7. The insurance provided by this Article **O.** shall be excess over any other valid and collectible insurance available to the insured, whether primary, excess, contingent or on any other basis, except for insurance purchased specifically by you to be excess of this policy.

P. EXTENSION OF COVERAGE – BODILY INJURY

The definition of "bodily injury" Section **V**- Definitions is deleted in its entirety and replaced by the following:

3. "Bodily injury" means bodily injury, mental anguish, mental injury, shock, fright, disability, humiliation, sickness or disease sustained by a person, including death resulting from any of these at any time.

Q. COVERAGE TERRITORY

The definition of "coverage territory" Section **V**- Definitions is deleted in its entirety and replaced by the following:

4. "Coverage territory" means anywhere in the world.

This insurance does not apply to:

a. "bodily injury" or "property damage" that takes place; or

b. "personal and advertising injury" caused by an offense committed

outside the United States of America (including its possessions and territories), Canada and Puerto Rico, unless a "suit" on the merits (to determine the insured's responsibility to pay damages to which this insurance applies) is brought in the United States of America (including its possessions and territories), Canada or Puerto Rico.

This insurance does not apply to damage, loss, cost or expenses in connection with any "suit" brought outside the United States of America (including its possessions and territories), Canada or Puerto Rico.

Jay P Freeman

THIS ENDORSEMENT CHANGES THE POLICY. PLEASE READ IT CAREFULLY.

XL PLUS BUSINESS AUTO EXTENSION ENDORSEMENT

This endorsement modifies insurance provided under the following:

BUSINESS AUTO COVERAGE FORM

COVERAGE DESCRIPTION

A. Temporary Substitute Auto Physical Damage

B. Who Is An Insured

- **1. Broad Form Insured**
- **2. Employees As Insureds**
- **3. Additional Insured By Contract, Agreement or Permit**
- **4. Employee Hired Autos**

C. Supplementary Payments

D. Amended Fellow Employee Exclusion

E. Physical Damage Coverage

- **1. Rental Reimbursement**
- **2. Extra Expense – Broadened Coverage**
- **3. Personal Effects Coverage**
- **4. Lease Gap**
- **5. Glass Repair – Waiver Of Deductible**

F. Physical Damage Coverage Extensions

- **1. Additional Transportation Expense**
- **2. Hired Auto Physical Damage**

G. Business Auto Conditions

- **1. Notice Of Occurrence**
- **2. Waiver Of Subrogation**
- **3. Unintentional Failure To Disclose Hazards**
- **4. Primary Insurance**

H. Bodily Injury Redefined

I. Extended Cancellation Condition

A. Temporary Substitute Auto Physical Damage

SECTION I – COVERED AUTOS, C. Certain Trailers, Mobile Equipment And Temporary Substitute Autos is changed by adding the following:

If Physical Damage coverage is provided by this Coverage Form, the following types of vehicles are also covered "autos" for Physical Damage coverage:

1. Any "auto" you do not own while used with the permission of its owner as a temporary substitute for a covered "auto" you own that is out of service because of its:

   a. Breakdown;

   b. Repair;

   c. Servicing;

   d. "Loss"; or

   e. Destruction.

B. Who Is An Insured

SECTION II – COVERED AUTOS LIABILITY COVERAGE, A. Coverage, 1. Who Is An Insured is changed by adding the following:

1. Broad Form Insured

For any covered "auto", any subsidiary, affiliate or organization, other than a partnership or joint venture, as may now exist or hereafter be constituted over which you assume active management or maintain ownership or majority interest, provided that you notify us within ninety (90) days from the date that any such subsidiary or affiliate is acquired or formed and that there is no similar insurance available to that organization. However, coverage does not apply to "bodily injury" or "property damage" that occurred before you acquired or formed the organization.

2. Employees As Insureds

Any "employee" of yours is an "insured" while using a covered "auto" you don't own, hire or borrow, in your business or your personal affairs.

3. Additional Insured By Contract, Agreement Or Permit

Any person or organization with whom you have agreed in writing in a contract, agreement or permit, to provide insurance such as is provided under this policy, provided that the "bodily injury" or "property damage" occurs subsequent to the execution of the written contract, agreement or permit.

4. Employee Hired Autos

An "employee" of yours is an "insured" while operating an "auto" hired or rented under a contract or agreement in that "employee's" name, with your permission, while performing duties related to the conduct of your business.

SECTION IV – BUSINESS AUTO CONDITIONS, B. General Conditions, 5. Other Insurance, b. is replaced with the following:

b. For Hired Auto Physical Damage Coverage, the following are deemed to be covered "autos" you own:

(1) Any covered "auto" you lease, hire, rent or borrow; and

(2) Any covered "auto" hired or rented by your "employee" under a contract in that individual "employee's" name, with your permission, while performing duties related to the conduct of your business.

However, any "auto" that is leased, hired, rented or borrowed with a driver is not a covered "auto".

C. Supplementary Payments

SECTION II – COVERED AUTOS LIABILITY COVERAGE, A. Coverage, 2. Coverage Extensions, a. Supplementary Payments is changed as follows:

Item **(2)** is deleted and replaced by the following:

(2) Up to $3,500 for cost of bail bonds (including bonds for related traffic law violations) required because of an "accident" we cover. We do not have to furnish these bonds.

Item **(4)** is deleted and replaced by the following:

(4) All reasonable expenses incurred by the "insured" at our request, including actual loss of earnings up to $500 a day because of time off from work.

D. Amended Fellow Employee Exclusion

SECTION II – COVERED AUTOS LIABILITY COVERAGE, B. Exclusions, 5. Fellow Employee does not apply.

The insurance provided under this Provision **D.** is excess over any other collectible insurance.

E. Physical Damage Coverage

SECTION III – PHYSICAL DAMAGE COVERAGE, A. Coverage is changed by adding the following:

1. Rental Reimbursement

a. We will pay for rental reimbursement expenses incurred by you for the rental of an "auto" because of "loss" to a covered "auto". Payment applies in addition to the otherwise applicable amount of each coverage you have on a covered "auto". No deductibles apply to this coverage.

b. We will pay only for those expenses incurred during the policy period beginning twenty-four (24) hours after the "loss" and ending, regardless of the policy's expiration, with the lesser of the following number of days:

(1) The number of days reasonably required to repair or replace the covered "auto". If "loss" is caused by theft, this number of days is added to the number of days it takes to locate the covered "auto" and return it to you.

(2) Thirty (30) days.

c. Our payment is limited to the lesser of the following amounts:

(1) Necessary and actual expenses incurred.

(2) $50 any one day per private passenger "auto";
$100 any one day per truck;
$1,500 any one period per private passenger "auto";
$3,000 any one period per truck; or
Higher limits if shown elsewhere in this policy.

d. This coverage does not apply while there are spare or reserve "autos" available to you for your operations.

e. If "loss" results from the total theft of a covered "auto" of the private passenger type, we will pay under this coverage only that amount of your rental reimbursement expenses which is not already provided for under the Physical Damage Coverage Extension.

2. Extra Expense – Broadened Coverage

We will pay for the expense of returning a stolen covered "auto" to you.

3. Personal Effects Coverage

If you have purchased Comprehensive Coverage on this policy for an "auto" you own and that "auto" is stolen, we will pay, without application of a deductible, up to $500 for "personal effects" stolen from the "auto".

As used in this endorsement, "personal effects" means tangible property that is worn or carried by an "insured". "Personal effects" does not include tools, jewelry, money or securities.

4. Lease Gap

In the event of a total "loss" to a covered "auto" shown in the Declarations, we will pay any unpaid amount due on the lease or loan for a covered "auto", less:

a. The amount paid under the Physical Damage Coverage Section of the policy; and

b. Any:

(1) Overdue lease/loan payments at the time of the "loss";

(2) Financial penalties imposed under a lease for excessive use, abnormal wear and tear or high mileage;

(3) Security deposits not returned by the lessor;

(4) Costs for extended warranties, Credit Life Insurance, Health, Accident or Disability Insurance purchases with the loan or lease; and

(5) Carry-over balances from previous loans or leases.

5. Glass Repair – Waiver Of Deductible

No deductible applies to glass damage if the glass is repaired rather than replaced.

F. Physical Damage Coverage Extensions

SECTION III – PHYSICAL DAMAGE COVERAGE, A. Coverage, 4. Coverage Extensions is amended by the following:

1. Additional Transportation Expense

Sections a. and **b.** are amended to provide a limit of $50 per day and a maximum limit of $1,000.

2. Hired Auto Physical Damage

The following section is added:

Any "auto" you lease, hire, rent or borrow is deemed to be a covered "auto" for physical damage coverage. The most we will pay for each covered "auto" is the lesser of:

(1) the actual cash value;

(2) the cost for repair or replacement; or

(3) $50,000, or higher limit if shown on the Declarations for Hired Auto Physical Damage Coverage.

For each covered "auto" a deductible of $100 for Comprehensive Coverage and $1,000 for Collision Coverage will apply.

G. Business Auto Conditions

SECTION IV – BUSINESS AUTO CONDITIONS, A. Loss Conditions is changed by the following:

1. Notice Of Occurrence

Section 2. – Duties In The Event Of Accident, Claim, Suit Or, Loss, a. is changed by adding the following:

If you report an injury to an "employee" to your workers' compensation carrier and if it is subsequently determined that the injury is one to which this insurance may apply, any failure to comply with this condition will be waived if you provide us with the required notice as soon thereafter as practicable after you know or reasonably should have known that this insurance may apply.

2. Waiver Of Subrogation

Section 5. Transfer Of Rights Of Recovery Against Others To Us is changed by adding the following:

However, this Condition does not apply to any person(s) or organization(s) with whom you have a written contract, but only to the extent that subrogation is waived prior to the "accident" or the "loss" under such contract with that person or organization.

SECTION IV – BUSINESS AUTO CONDITIONS, B. General Conditions is changed by the following:

3. Unintentional Failure To Disclose Hazards

The following condition is added:

Your unintentional failure to disclose all hazards as of the inception date of the policy shall not prejudice any insured with respect to the coverage afforded by this policy.

4. Primary Insurance

Condition 5. Other Insurance is changed by adding the following:

For any covered "auto" this insurance shall apply as primary and not contribute with any other insurance where such requirement is agreed in a written contract executed prior to a "loss".

H. Bodily Injury Redefined

SECTION V – DEFINITIONS, C. "Bodily injury" is replaced by the following:

"Bodily injury" means bodily injury, sickness or disease sustained by a person including mental anguish, mental injury, shock, fright or death resulting from any of these at any time.

I. Extended Cancellation Condition

COMMON POLICY CONDITIONS (Form IL 00 17), A. Cancellation, 2.b. is replaced by the following:

The greater of sixty (60) days or the time required by any applicable state amendatory endorsement before the effective date of cancellation if we cancel for any other reason.

All other terms and conditions of this policy remain unchanged.

Jay P Freeman

WAIVER OF OUR RIGHT TO RECOVER FROM OTHERS ENDORSEMENT — CALIFORNIA

We have the right to recover our payments from anyone liable for an injury covered by this policy. We will not enforce our right against the person or organization named in the Schedule. (This agreement applies only to the extent that you perform work under a written contract that requires you to obtain this agreement from us.)

You must maintain payroll records accurately segregating the remuneration of your employees while engaged in the work described in the Schedule.

The additional premium for this endorsement shall be _2.50_% of the California workers' compensation premium otherwise due on such remuneration.

Schedule

Person or Organization	Job Description
	Per Contract

This endorsement changes the policy to which it is attached and is effective on the date issued unless otherwise stated.

(The information below is required only when this endorsement is issued subsequent to preparation of the policy.)

Endorsement Effective 02/15/2022 Policy No. FOR-WC-000000274-0 Endorsement No. 000

Insured S & H Civilworks Premium

Insurance Company Countersigned by Jay P Freeman

Transverse Insurance Company

WC 04 03 06
(Ed. 04-84)

XL Insurance

Regulatory Office
Dept: Regulatory
505 Eagleview Blvd., Suite 100
Exton, PA 19341-1120
Telephone: 800-688-1840

Issuing Company and Address: GREENWICH INSURANCE COMPANY

COMMERCIAL EXCESS/UMBRELLA LIABILITY DECLARATIONS

Policy Number: NEC-6006780-00 **Renewal of Number:** NEW

Producer: NIP Group, Inc. t/a NIP Programs

Named Insured: S&H Civilworks

Address of Named Insured:
1801 Hilltop Drive
Colton, CA 92324

☐ Individual ☐ Joint Venture ☐ Partnership ☐ Limited Liability Company
☒ Other (describe)
Corporation

Description of Business:
Concrete, Grading, Sidewalk,

Policy Term: From: 02/15/2022 To: 02/15/2023
12:01 am Standard Time at your mailing address shown above.

Retroactive Date (if any): _____ (Applicable to Claims-Made Coverage Only)

This replaces all previously issued policy Declarations, if any. This policy applies only to accidents, occurrences, offenses, or losses that happen during the policy term shown above. If the policy is written on a continuous basis, each period of one year ending on the anniversary date of this policy constitutes a separate policy period.

Commercial Excess/Umbrella Liability Coverage

Limits of Insurance:	Each Occurrence Limit	$2,000,000
	Products/Completed Work Aggregate Limit	$2,000,000
	General Aggregate Limit	$2,000,000
Self-insured Retention		$0

Premium $16,959 Deposit Premium _____ Minimum Earned Premium _____

Audit Period (if applicable)

☐ Annual ☐ Semi-Annual ☐ Quarterly ☐ Monthly

Schedule of Underlying Insurance
(Show Insurer, policy number, policy period, and limits of insurance)

Commercial Liability Limits:		
X w/ Personal & Advertising Injury Liability Coverage	Each Occurrence	$1,000,000
	Personal & Advertising Injury	$1,000,000
	General Aggregate	$2,000,000
____ w/ Broad Form Contractual Liability Coverage	Products/Completed Work Aggregate	$2,000,000
	Fire Legal Liability	$100,000
____ w/ Non-Owned Auto Liability Coverage/Hired Auto Liability Coverage	Short Term Rented Premises	
	Employee Benefits Liability	
	Employment Practices Liability	
	Other _____	
X Occurrence Form		
____ Claims Made Form		

Retroactive Date: _____
Insurer: XL Insurance America, Inc.
Policy Number: NGL-1005666-00
Policy Period: 02/15/2022 TO 02/15/2023

Commercial Auto Liability Limits:		
X w/Non-Owned Auto Liability Coverage/ Hired Auto Liability Coverage	Combined Single Limit; Or	$1,000,000
	Bodily Injury-Each Person	
	Bodily Injury-Each Accident	
	Property Damage-Each Accident	
	Garage Aggregate Limit for Other Than Autos (if applicable)	

Insurer: Greenwich Insurance Company
Policy Number: NBA-1005667-00
Policy Period: 02/15/2022 TO 02/15/2023

Employer's Liability Limits:	
Combined Single Limit; Or	
Bodily Injury by Accident, Each Accident	
Bodily Injury by Disease, Policy Limit	
Bodily Injury by Disease, Each Employee	

Insurer: _____
Policy Number: _____
Policy Period: _____

Forms and Endorsements That Apply To This Policy: (Title, Form Number, and Edition)

See Schedule of Forms and Endorsements.

Countersignature: _____ By: _____
(Date) (Authorized Representative)

THIS IS A LEGAL CONTRACT
-- PLEASE READ THIS CAREFULLY --

COMMERCIAL EXCESS/UMBRELLA LIABILITY COVERAGE

(THIS POLICY MAY INCLUDE CLAIMS-MADE COVERAGE)

The following Table of Contents shows how this policy is organized. It will help "you" locate particular sections of this form.

TABLE OF CONTENTS

A state-specific amendatory endorsement applies to this policy. Other endorsements and schedules may also apply. They are identified on the "declarations".

Refer to the Definitions for words and phrases that have special meaning. These words and phrases are shown in quotation marks.

AGREEMENT

Subject to all the "terms" that apply, and in return for "your" payment of the required premium, "we" provide the coverages described in this policy.

DEFINITIONS

1. "You" and "your" --

   a. "You" and "your" mean the person, persons, entity, or organization named as the insured on the "declarations".

   b. Except with respect to any applicable "terms" of this policy that address cancellation, nonrenewal, renewal, or premium, "you" and "your" also include any organization (other than a joint venture, partnership, or limited liability company) newly acquired or formed by the person, persons, entity, or organization named as the insured on the "declarations" and over which such person, persons, entity, or organization maintains ownership or a majority interest.

      However, "you" and "your" do not include any such organization:

      1) if there is other similar insurance available to it;
      2) after 90 days immediately following the acquisition or formation of the organization or the end of the policy period, whichever is earlier;
      3) with respect to "bodily injury" or "property damage" that occurred prior to the acquisition or formation of the organization; or
      4) with respect to "personal and advertising injury" arising out of an offense committed prior to the acquisition or formation of the organization.

2. The words "we", "us", and "our" mean the company providing this coverage.

3. "Advertisement" means a public notice or announcement, including but not limited to one found in electronic communication or on the Internet, offering "your" goods, products, or services:

   a. for sale, rent, lease, or other purpose to potential buyers, clients, customers, or patrons; or

   b. for promotion to and consideration by potential supporters.

   With respect to "advertisements" that appear on websites, only that part of a website that offers "your" goods, products, or services:

   a. for sale, rent, lease, or other purpose to potential buyers, clients, customers, or patrons; or

   b. for promotion to and consideration by potential supporters;

   is considered an "advertisement".

4. "Auto" means:

   a. a land motor vehicle, a trailer, or a semi-trailer which is designed for travel on public roads, including attached machinery and equipment; or

   b. any other land vehicle that is subject to a compulsory or financial responsibility law or other motor vehicle insurance law in the state where it is licensed or principally garaged.

   However, "auto" does not include "mobile equipment".

5. "Bodily injury" means bodily harm, sickness, or disease sustained by a person. "Bodily injury" includes death that results at any time from bodily harm, sickness, or disease.

   However, "bodily injury" does not include mental or emotional injury, suffering, or distress that does not result from physical injury, sickness, or disease.

6. "Claims-made" means liability insurance coverage provisions that apply to a claim for injury or damage if:

   a. the claim is first made against an "insured" during the policy period or an extended reporting period; and

   b. the injury or damage occurs on or after the retroactive date shown on the declarations of the "claims-made" policy and prior to the termination of the policy period of that insurance.

7. "Coverage territory" --

   a. Under Coverage E -- Excess Liability, "coverage territory" means those countries, territories, possessions, international waters, airspace, and other parts of the world that fall within the coverage territory recognized by the applicable "underlying insurance".

   b. Under Coverage U -- Umbrella Liability, "coverage territory" means the world except for any foreign country, nation, or jurisdiction upon which the United States of America has imposed an embargo or other economic sanctions.

8. "Covered contract" --

   a. "Covered contract" means:

      1) a lease of premises;
      2) an easement or license agreement.

         However, this does not include an agreement in connection with any construction or demolition operation within 50 feet of a railroad;

      3) a responsibility to indemnify a municipality if required by an ordinance.

         However, this does not apply in connection with work done for the municipality;

      4) a sidetrack agreement;
      5) an elevator maintenance agreement; or
      6) any part of any other contract or agreement relating to the conduct of "your" business (including an indemnification of a municipality in connection with work done for the municipality) under which "you" assume the tort liability of another person or organization to pay "damages" because of "bodily injury" or "property damage" to a third person or organization. Tort liability means a liability that would be imposed by law in the absence of any contract or agreement.

   b. However, "covered contract" does not include that part of any contract or agreement:

      1) that indemnifies a railroad for "bodily injury" or "property damage" arising out of construction or demolition operations within 50 feet of railroad property and affecting any railroad bridge or trestle, tracks, road-beds, tunnel, underpass, or crossing;
      2) that indemnifies any person or organization for damage by fire to premises rented or loaned to "you";
      3) that indemnifies an architect, engineer, or surveyor for injury or damage arising out of:

         a) preparing, approving, or failing to prepare or approve maps, drawings, opinions, reports, surveys, change orders, designs, or specifications; or
         b) giving directions or instructions, or failing to give them, if that is the primary cause of the injury or damage; or

      4) under which the "insured", if an architect, engineer, or surveyor, assumes liability for injury or damage arising out of the "insured's" rendering or failing to render professional services, including those listed in 3)a) above, and supervisory, inspection, or engineering services.

9. "Damages" means compensation in the form of money for a person or organization who claims to have suffered an injury.

10. "Data records" means files, documents, and information in an electronic format that are stored on instruments used with computer hardware, networks, or other computer programs and applications, including those used with electronically controlled equipment.

11. "Declarations" are all pages labeled "declarations", supplemental declarations, or schedules, which pertain to this policy.

12. "Designated insured" means:

    a. all individuals listed in b.1), b.2), b.3), b.4), and b.5) of the definition of "insured"; and

    b. any "employee" who is authorized to give or receive notice of an "occurrence" or a claim.

13. "Employee" includes a "leased worker".

    However, "employee" does not include a "temporary worker".

14. "Executive officer" means a person holding any of the officer positions created by "your" charter, constitution, by-laws, or any other similar governing document.

15. "Impaired property" means tangible property other than "products" or "your work":

    a. that is less useful or no longer useable because:

        1) it includes "products" or "your work" that is, or is believed to be, deficient or dangerous; or
        2) "you" failed to carry out the terms of a contract or agreement; and

    b. which can be restored to use by:

        1) the repair, replacement, adjustment, or removal of "products" or "your work"; or
        2) "your" fulfilling the terms of the contract or agreement.

16. "Indemnitee" means a person or organization for whom an "insured" has assumed liability for "damages" due to "bodily injury" or "property damage" under a "covered contract".

17. "Insured" --

    a. Under Coverage E -- Excess Liability, "insured" means:

        1) "you"; and
        2) persons or organizations included as "insureds" or additional insureds in "underlying insurance".

        However, such persons or organizations are "insureds" under the "terms" of this policy only to the extent that they are covered by "underlying insurance".

    b. Under Coverage U -- Umbrella Liability, "insured" means:

        1) "you" and "your" spouse, but only with respect to the conduct of a business of which "you" are the sole owner, if "you" are shown on the "declarations" as an individual;
        2) "you" and "your" partners or members and their spouses, but only with respect to the conduct of "your" business, if "you" are shown on the "declarations" as a partnership or joint venture;
        3) "you" and "your" members, but only with respect to the conduct of "your" business, if "you" are shown on the "declarations" as a limited liability company. "Your" managers are also "insureds", but only with respect to their duties as managers;
        4) "you" and "your" trustees, but only while acting within the scope of their duties as trustees, if "you" are shown on the "declarations" as a trust; or

5) "you" and "your" "executive officers" and directors, but only while acting within the scope of their duties as "executive officers" or directors, if "you" are shown on the "declarations" as an organization other than a partnership, joint venture, or limited liability company. "Insured" also includes "your" stockholders, but only for their liability as stockholders.

c. Under Coverage U, "insured" also means:

1) any person or organization, except "your" "employee" or "volunteer worker", while acting as "your" real estate manager;
2) if "you" die during the policy period, "your" legal representative while acting within the scope of such duties, or a person or organization who has temporary custody of "your" property with respect to liability arising out of the maintenance or use of that property until "your" legal representative is appointed. "Your" legal representative has all of "your" rights and duties under this coverage; and
3) "your" "employees" for acts within the scope of their employment by "you", and "your" "employees" and "volunteer workers" while in the course of performing duties related to the conduct of "your" business.

However, this does not include "your" managers if "you" are a limited liability company or "your" "executive officers" if "you" are an organization other than a partnership, joint venture, or limited liability company.

None of these "employees" or "volunteer workers" are "insureds" for:

a) "bodily injury" or "personal and advertising injury":

(1) to "you", to "your" partners or members (if "you" are a partnership or joint venture), to "your" members (if "you" are a limited liability company), to fellow "employees" while in the course of employment or while performing duties related to the conduct of "your" business, or to "your" other "volunteer workers" while performing duties related to the conduct of "your" business;
(2) to a spouse, child, parent, brother, or sister of that injured fellow "employee" or "volunteer worker" as described in a)(1) above; or
(3) for which there is an obligation to fully or partially reimburse a third party for "damages" arising out of injury described in a)(1) or a)(2) above; or

b) "property damage" to property owned by; occupied by; used by; rented to; loaned to; in the care, custody, or control of; or over which physical control is being applied by "you", "your" "employees", "your" "volunteer workers", any of "your" partners or members (if "you" are a joint venture or a partnership), or any of "your" members (if "you" are a limited liability company).

No person or organization is an "insured" with respect to the conduct of a current or past partnership, joint venture, or limited liability company that is not named on the "declarations" as an "insured".

18. "Leased worker" means a person whom "you" lease from a labor leasing firm under a contract or agreement to perform duties related to the conduct of "your" business.

However, "leased worker" does not include a "temporary worker".

19. "Limit" means the amount of coverage that applies.

20. "Loading or unloading" --

    a. "Loading or unloading" means the handling of property:

        1) starting after it is removed from the point where it has been accepted for transit by "auto", aircraft, or watercraft;
        2) continuing while it is in or on such vehicle; and
        3) ending when it has been removed from the vehicle to the point of final delivery.

    b. "Loading or unloading" includes the movement of property by a mechanical device, but only if the mechanical device is:

        1) a hand truck; or
        2) attached to the transporting vehicle.

21. "Mobile equipment" --

    a. "Mobile equipment" means land vehicles, including attached machinery or equipment, that meet one or more of the following criteria:

        1) those which are used only on premises (including adjoining ways) owned by or rented to "you";
        2) those which are designed primarily for use off public roads, including bulldozers, farm machinery, and forklifts;
        3) those which travel on crawler treads;
        4) those, whether self-propelled or not, designed or used primarily to afford mobility to the following types of equipment, which must be a part of or be permanently attached to such vehicle:

            a) power cranes, shovels, loaders, diggers, or drills; and
            b) graders, scrapers, rollers, and other road construction or repair equipment;

        5) those not described in a.1), a.2), a.3), or a.4) above which are not self-propelled, but are used primarily to afford mobility to the following types of permanently attached equipment:

            a) air compressors, pumps, and generators (this includes spraying, welding, and building cleaning equipment);
            b) geophysical exploration, lighting, and well servicing equipment; and
            c) cherry pickers and similar devices used to raise and lower workers; or

        6) those not described in a.1), a.2), a.3), or a.4) above which are primarily maintained for other than the purpose of transporting persons or cargo.

    b. However, "mobile equipment" does not include self-propelled vehicles with the following types of permanently attached equipment:

        1) equipment designed primarily for snow removal, street cleaning, or road maintenance other than road construction or resurfacing;
        2) cherry pickers and similar devices mounted on automobile or truck chassis and used to raise or lower workers;
        3) air compressors, pumps, and generators (this includes spraying, welding, and building cleaning equipment); or
        4) geophysical exploration, lighting, and well servicing equipment.

        The vehicles described in b. above are considered "autos".

However, "mobile equipment" does not include land vehicles that are subject to a compulsory or financial responsibility law or other motor vehicle insurance law in the state where it is licensed or principally garaged. Land vehicles subject to a compulsory or financial responsibility law or other motor vehicle insurance law are considered "autos".

22. "Occurrence" means an accident and includes continuous or repeated exposures to similar conditions.

23. "Personal and advertising injury" means injury, including "bodily injury" that is a consequence thereof, arising out of one or more of the following offenses:

    a. oral or written publication, including electronic publication, of material that:

        1) slanders or libels a person or organization;
        2) disparages a person's or organization's goods, products, or services; or
        3) violates a person's right of privacy;

    b. false arrest, detention, or imprisonment;

    c. malicious prosecution;

    d. misappropriation of advertising ideas in "your" "advertisement";

    e. infringement of the copyright, slogan, or trade-dress of another in "your" "advertisement"; or

    f. wrongful entry into, wrongful eviction from, or invasion of the right of private occupancy of a room, dwelling, or premises that a person occupies. This offense must be committed by or on behalf of the owner, landlord, or lessor of the room, dwelling, or premises.

24. "Pollutant" means:

    a. any solid, liquid, gaseous, thermal, or radioactive irritant or contaminant, including acids, alkalis, chemicals, fumes, smoke, soot, vapor, and waste. Waste includes materials to be recycled, reclaimed, reconditioned, or disposed of; or

    b. electrical, magnetic, or electromagnetic particles and fields, whether visible or invisible, and sound.

25. "Products" --

    a. "Products" means goods or products manufactured, sold, handled, distributed, or disposed of by "you", others trading under "your" name, or a person or organization whose business assets "you" have acquired.

    b. "Products" includes:

        1) warranties or representations made at any time regarding the quality, fitness, durability, performance, or use of "products";
        2) containers (other than vehicles), materials, parts, or equipment furnished in connection with such "products"; and
        3) providing or failing to provide warnings or instructions.

    c. However, "products" does not include:

        1) vending machines or other property that is rented to or placed for the use of others, but not sold; or
        2) real property.

26. "Products/completed work hazard" --

    a. "Products hazard" includes "bodily injury" or "property damage" occurring away from premises "you" own or rent and arising out of "products" after physical possession of the "products" has been relinquished to others.

b. "Completed work hazard" includes "bodily injury" or "property damage" occurring away from premises "you" own or rent and arising out of "your work".

However, it does not include work that has not been completed or that has not been abandoned.

"Your work" is deemed completed at the earliest of the following times:

1) when all work specified in "your" contract has been completed;
2) when all work to be done at a job site has been completed if "your" contract includes work at more than one job site; or
3) when that part of the work at a job site has been put to its intended use by any person or organization other than another contractor or subcontractor working on the same project.

Work which requires further service, maintenance, correction, repair, or replacement because of defect or deficiency, but which is otherwise complete, will be deemed completed.

c. However, neither the "products hazard" nor the "completed work hazard" includes "bodily injury" or "property damage" arising out of:

1) the transportation of property, unless the injury or damage arises out of a condition in or on a vehicle not owned by or operated by "you", and that condition was created by any "insured's" "loading or unloading" of the vehicle;
2) the presence of tools, uninstalled equipment, or abandoned or unused materials; or
3) "products" or operations for which the classification on the declarations of a policy of "underlying insurance" specifies "including Products/Completed Work".

27. "Property damage" --

a. "Property damage" means:

1) physical injury to or destruction of tangible property, including loss of use of that property. Loss of use is deemed to occur at the time of the physical injury that caused it; or
2) the loss of use of tangible property that has not been physically damaged. Loss of use is deemed to occur at the time of the "occurrence" that caused it.

Except with respect to coverage provided for "autos" under Coverage E, "data records" are not tangible property.

b. With respect to the ownership, maintenance, or use of "autos" covered under Coverage E, "property damage" also includes any loss, cost, or expense arising out of any:

1) request, demand, order, statute, or regulation requiring that any "insured" or others test for, abate, monitor, clean up, remove, contain, treat, detoxify, neutralize, or in any way respond to or assess the effects of "pollutants"; or
2) claim or "suit" by or on behalf of any governmental authority relating to testing for, abating, monitoring, cleaning up, removing, containing, treating, detoxifying, neutralizing, or in any way responding to or assessing the effects of "pollutants".

28. "Recreational vehicle" means a golf cart, snowmobile, or any other land motor vehicle designed for off-road recreational use.

29. "Self-insured retention" means the dollar amount shown on the "declarations" that will be first paid by the "insured" before this insurance becomes applicable.

30. "Silica" means silicon dioxide (SiO_2) including:

    a. crystalline silica, silica dust, industrial sand, silica sand, quartz, quartz dust, cristobalite, tridymite, tripoli, and silica mixed with other compounds;

    b. amorphous silica and silica gel; and

    c. silica dust mixed with other dust particles.

31. "Suit" means a civil proceeding or an administrative proceeding alleging "damages" for "bodily injury", "property damage", "personal and advertising injury", or any other injury or damage to which this policy applies. "Suit" includes any alternative dispute resolution proceeding or arbitration proceeding to which:

    a. any "insured" must submit in compliance with a law or regulation; or

    b. any "insured" submits with "our" consent or the consent of the "underlying insurer".

32. "Temporary worker" means a person who is furnished to "you":

    a. as a temporary substitute for a permanent "employee" who is on a leave of absence; or

    b. to meet seasonal or short-term workloads.

33. "Terms" means all provisions, limitations, exclusions, conditions, and definitions that apply to this Commercial Excess/Umbrella Liability Coverage.

34. "Underlying insurance" means the liability insurance coverage provided under policies shown in the Schedule of Underlying Insurance on the "declarations" for the "limits" and policy periods indicated. This includes any policies issued to replace those policies during the term of this insurance that:

    a. provide at least the same "limits"; and

    b. provide the same hazards insured against, except as modified by general program revisions or as agreed to by "us" in writing.

35. "Underlying insurer" means any insurer that provides a policy of "underlying insurance".

36. "Volunteer worker" means a person who is not "your" "employee", donates his or her time or services, and who:

    a. acts at "your" direction and within the scope of duties "you" determine; and

    b. is not paid a fee, salary, or other compensation for his or her time or services, other than reimbursement of out-of-pocket expenses.

    However, "volunteer worker" does not include a "leased worker" or a "temporary worker".

37. "Your work" --

    a. "Your work" means:

        1) work or operations performed by "you" or on "your" behalf; and
        2) materials, parts, and equipment supplied for such work or operations.

    b. "Your work" includes:

        1) written warranties or representations made at any time regarding quality, fitness, durability, performance, or use of "your work"; and
        2) providing or failing to provide warnings or instructions.

COMMERCIAL EXCESS/UMBRELLA LIABILITY COVERAGES

COVERAGE E -- EXCESS LIABILITY

1. Insuring Agreement

a. "We" will pay on behalf of the "insured" those sums in excess of "underlying insurance" for which an "insured" becomes legally obligated to pay as "damages" to which this insurance applies.

"We" have the right and duty to defend the "insured" against a "suit" seeking "damages" which may be covered under Coverage E -- Excess Liability, when the "limits" of "underlying insurance" are exhausted by the payment of claims, settlements, judgments, and/or defense costs if the applicable "limit" of "underlying insurance" is reduced by the payment of defense costs.

If "we" have no duty to defend, "we" have the right to defend or the right to participate with the "insured" or any "underlying insurer" in the defense, investigation, and settlement of "suits" against the "insured" seeking "damages" to which this insurance may apply. However, "we" have no duty to defend the "insured" against a "suit" seeking "damages" to which this policy does not apply.

At "our" option, "we" may investigate any "occurrence" or offense to which this insurance applies and settle the resulting claims or "suits" for which "we" have the duty to defend.

b. The amount "we" will pay for "damages" and/or defense costs is limited as described under How Much We Pay.

c. "We" do not have to provide a defense after "we" have paid an amount equal to the applicable "limit" as the result of:

1) judgments or written settlements agreed to by "us"; and/or
2) defense costs, but only if the applicable "limit" of "underlying insurance" is reduced by the payment of defense costs.

"We" have no other liability or obligation to pay sums or to provide assistance or support unless specifically provided for under Supplemental Payments.

d. This insurance applies only to:

1) "bodily injury" or "property damage" that:

a) is caused by an "occurrence" that takes place in the "coverage territory";
b) occurs during the policy period of this policy; and
c) is covered by "underlying insurance" or that would have been covered by "underlying insurance" but for the exhaustion of "underlying insurance" "limits" by the payment of claims, settlements, judgments, and/or defense costs;

2) "personal and advertising injury" that:

a) arises out of an offense committed in the course of "your" business if the offense is committed:

(1) within the "coverage territory"; and
(2) during the policy period of this policy; and

b) is covered by "underlying insurance" or that would have been covered by "underlying insurance" but for the exhaustion of "underlying insurance" "limits" by the payment of claims, settlements, or judgments; and

3) any other injury or damage that:

a) arises out of a negligent act, error, omission, injury, event, incident, or offense; and

b) is covered by "underlying insurance" or that would have been covered by "underlying insurance" but for the exhaustion of "underlying insurance" "limits" by the payment of claims, settlements, judgments, and/or defense costs;

subject to the following additional requirements:

a) if the "underlying insurance" applies on other than a "claims-made" basis, the negligent act, error, omission, injury, event, incident, or offense must take place:

(1) within the "coverage territory"; and
(2) during the policy period of this policy;

b) if the "underlying insurance" applies on a "claims-made" basis, the negligent act, error, omission, injury, event, incident, or offense must take place:

(1) within the "coverage territory"; and
(2) on or after the Retroactive Date, if any, shown on the "declarations" of this policy and prior to the end of the policy period of this policy; and

c) with respect to "underlying insurance" that applies on a "claims-made" basis, the claim must be first made against an "insured" within the policy period of this policy or within an Extended Reporting Period provided by this policy as described under 1.e. below. A claim will be deemed to have been first made when one of the following occurs:

(1) notice of such claim is received and recorded by an "insured", by an "underlying insurer", or by "us" if the "limits" of "underlying insurance" have been exhausted, whichever occurs first, if the "underlying insurance" is written on a "claims-made" and recorded basis; or
(2) notice of such claim is received by any "insured", and is reported to "us" in writing, if the "underlying insurance" is written on any other "claims-made" basis.

All claims for "damages" because of injury to the same person or organization will be treated as if they were made at the time the first claim is made against any "insured", regardless of the number of claims submitted.

e. Extended Reporting Periods

1) If "underlying insurance" written on a "claims-made" basis, as described under 1.d.3)b) and 1.d.3)c) above, provides one or more Extended Reporting Periods without additional premium charge, then Coverage E -- Excess Liability will also provide corresponding Extended Reporting Periods that are subject to the same terms as such Extended Reporting Periods of the "underlying insurance". The coverage provided by the Extended Reporting Periods of Coverage E -- Excess Liability will be excess over the coverage provided by such extended reporting periods of the "underlying insurance".

If "underlying insurance" requires a written request from "you" for an Extended Reporting Period to be provided by endorsement and for an additional charge, then for a corresponding Extended Reporting Period to apply under this policy, "we" must also receive a written request from "you" within the same period of time as specified by "underlying insurance", and "you" must pay any additional premium to "us" when due.

2) If "underlying insurance" written on a "claims-made" basis, as described under 1.d.3)b) and 1.d.3)c) above, does not provide an Extended Reporting Period, "you" may purchase an Extended Reporting Period of Coverage E -- Excess Liability if:

   a) "you" elect to cancel or not renew this Commercial Excess/Umbrella Liability Coverage;
   b) "we" cancel this Commercial Excess/Umbrella Liability Coverage for any reason other than "your" nonpayment of premium;
   c) "we" elect not to renew this Commercial Excess/Umbrella Liability Coverage;
   d) "we" renew or replace this Commercial Excess/Umbrella Liability Coverage with other excess coverage that:

      (1) provides "claims-made" coverage; and
      (2) has a Retroactive Date later than the one shown on the "declarations" of this Commercial Excess/Umbrella Liability policy; or

   e) "we" renew or replace this Commercial Excess/Umbrella Liability Coverage with other excess insurance that does not provide coverage on a "claims-made" basis.

3) The following additional provisions apply with respect to any Extended Reporting Periods provided under Coverage E -- Excess Liability:

   a) The Extended Reporting Period applies to claims for injury that take place on or after the Retroactive Date, if any, shown on the "declarations" of this policy and before the end of this policy period.
   b) The Extended Reporting Period of this policy does not change the policy period of this policy or alter the scope of coverage.
   c) Extended Reporting Periods may not be canceled once in effect.
   d) Except with respect to an Extended Reporting Period provided by endorsement for an additional premium charge, Extended Reporting Periods will not reinstate or increase the "limits" of insurance applicable to any claim to which this Commercial Excess/Umbrella Liability Coverage applies.

4) The Extended Reporting Period described under 1.e.2) above is available by endorsement, for an additional charge. The charge for the Extended Reporting Period will not exceed 200% of the annual premium charge for the "claims-made" coverage provided by this Commercial Excess/Umbrella Liability Coverage. In order to purchase the Extended Reporting Period, "you" must send "us" a written request for this coverage option not later than 30 days after the end of the policy period, or not later than 30 days after the effective date of cancellation, whichever comes first.

The Extended Reporting Period will not go into effect unless the additional premium is paid by the due date. Once the additional premium due for the Extended Reporting Period has been paid, the premium will be considered to be fully earned.

5) The Extended Reporting Period described under 1.e.2) above starts at the end of the policy period and lasts for three years, unless a different number of years is indicated on the Extended Reporting Period Endorsement Schedule. It applies only to claims subject to the following requirements:

   a) the act, error, omission, injury, event, incident, or offense took place in the "coverage territory";
   b) the act, error, omission, injury, event, incident, or offense began on or after any Retroactive Date shown in the "declarations" and before the end of the policy period that applies to this coverage; and
   c) a claim is first made against an "insured" during the Extended Reporting Period.

6) The Extended Reporting Period described under 1.e.2) above is subject to a separate aggregate "limit" of insurance, equal in amount to the General Aggregate Limit dollar amount shown in the "declarations". The Extended Reporting Period Aggregate Limit applies to the entire term of the Extended Reporting Period, regardless of the number of years the Extended Reporting Period is in effect.

f. "Damages" due to "bodily injury" include "damages" claimed by any person or organization for care, loss of services, or death that may result at any time from such "bodily injury".

g. If a contract or agreement requires that coverage be provided to an "insured" who is an additional insured covered by "underlying insurance", the most "we" will pay on behalf of the additional insured is the "limit" required by the contract or agreement, less any amounts payable by any "underlying insurance".

h. When injury or damage arising out of an exposure covered by "underlying insurance" is subject to a separate "limit" under the terms of that coverage, this Commercial Excess/Umbrella Liability Coverage will apply to injury or damage arising out of that exposure only if the separate "limit" is shown in the Schedule of Underlying Insurance.

i. The terms, definitions, conditions, and exclusions of the policies of "underlying insurance" govern the coverage provided under Coverage E -- Excess Liability, except for provisions pertaining to premium, right of recovery, cancellation or nonrenewal, insurance under more than one policy, defense, "limits", any agreement to renew, and the "terms" of this coverage.

2. Exclusions

"We" do not pay for:

a. injury or damage that is not covered by "underlying insurance" for any reason other than exhaustion of its "limit".

b. a claim based on violation of the responsibilities, obligations, or duties imposed on fiduciaries by the Employee Retirement Income Security Act of 1974 as amended and any similar federal, state, or local laws, statutes, or regulations.

c. "bodily injury" if benefits are provided or are required to be provided by the "insured" under a workers' compensation, disability benefits, occupational disease, unemployment compensation, or like law.

d. "bodily injury" sustained by an "employee" of the "insured" arising out of and in the course of employment as a master or member of the crew of any vessel.

e. liability imposed by automobile no-fault laws or any similar laws; uninsured motorist or underinsured motorist laws; first party physical damage coverage; personal injury protection; or automobile medical payments coverage.

f. "bodily injury" or "property damage" arising out of the actual, alleged, or threatened discharge, dispersal, seepage, migration, release, escape, or emission of "pollutants".

However, this exclusion does not apply to "bodily injury" or "property damage" that is covered by "underlying insurance" or that would have been covered but for the exhaustion of the "limits" of the "underlying insurance". The coverage provided by this policy will be subject to the provisions, exclusions, and limitations of the "underlying insurance".

g. "personal and advertising injury" arising out of the actual, alleged, or threatened discharge, dispersal, seepage, migration, release, escape, or emission of "pollutants" at any time.

h. any loss, cost, or expense arising out of any:

1) request, demand, order, statute, or regulation requiring that any "insured" or others test for, abate, monitor, clean up, remove, contain, treat, detoxify, neutralize, or in any way respond to or assess the effects of "pollutants"; or
2) claim or "suit" by or on behalf of any governmental authority relating to testing for, abating, monitoring, cleaning up, removing, containing, treating, detoxifying, neutralizing, or in any way responding to or assessing the effects of "pollutants".

However, this exclusion does not apply to any loss, cost, or expense that is covered by "underlying insurance" or that would have been covered but for the exhaustion of the "limits" of the "underlying insurance". The coverage provided by this policy will be subject to the provisions, exclusions, and limitations of the "underlying insurance".

i. "bodily injury" or "property damage" arising out of the use of "autos", "mobile equipment", watercraft, aircraft, or "recreational vehicles" in, or in the practice for, or the preparation for, prearranged professional or organized racing, speed, pulling or pushing, demolition, or stunt activities or contests.

j. "bodily injury", "property damage", "personal and advertising injury", or any other injury that is covered by "underlying insurance", including on a "claims-made" basis, arising directly or indirectly out of violations of or alleged violations of:

1) the Telephone Consumer Protection Act (TCPA), including any amendments thereto, and any similar federal, state, or local laws, ordinances, statutes, or regulations;
2) the CAN-SPAM Act of 2003, including any amendments thereto, and any similar federal, state, or local laws, ordinances, statutes, or regulations;
3) the Fair Credit Reporting Act (FCRA), including any amendments thereto, such as the Fair and Accurate Credit Transaction Act (FACTA), and any similar federal, state, or local laws, ordinances, statutes, or regulations; or
4) any other federal, state, or local law, regulation, statute, or ordinance that restricts, prohibits, or otherwise pertains to the collecting, communicating, recording, printing, transmitting, sending, disposal, or distribution of material or information.

k. "bodily injury" or "personal and advertising injury":

1) to a person arising out of any:

a) refusal to employ that person;
b) termination of employment of that person; or
c) coercion, demotion, evaluation, reassignment, discipline, defamation, harassment, humiliation, malicious prosecution, discrimination, sexual misconduct, or other employment-related practices, policies, acts, or omissions directed towards that person; or

2) to a spouse, child, parent, brother, or sister of that person as a consequence of "bodily injury" or "personal and advertising injury" to that person as a result of employment-related practices described in 1)a), 1)b), or 1)c) above.

This exclusion applies whether the injury as a result of 1)a), 1)b), or 1)c) above occurs before, during, or after employment of that person.

This exclusion applies where the "insured" is liable either as an employer or in any other capacity or there is an obligation to fully or partially reimburse a third party for "damages" arising out of 1)a), 1)b), 1)c), or 2) above.

l. "bodily injury", "property damage", or "personal and advertising injury" caused directly or indirectly by the following:

1) war, including undeclared or civil war;
2) warlike action by a military force, including action that is hindering or defending against an actual or expected attack, by any government, sovereign, or other authority using military personnel or other agents; or
3) insurrection, rebellion, revolution, usurped power, or action taken by governmental authority in hindering or defending against any of these.

m. any loss, cost, expense, or "damages" arising out of damage to, corruption of, loss of use or function of, or inability to access, change, or manipulate "data records".

However, this exclusion does not apply if such loss, cost, expense, or "damages" is covered by "underlying insurance" or would have been covered but for the exhaustion of the "limits" of the "underlying insurance". The coverage provided by this policy will be subject to the provisions, exclusions, and limitations of the "underlying insurance".

n. any of the following:

1) "bodily injury" arising out of the actual, alleged, or threatened ingestion, inhalation, or absorption of lead;
2) "property damage" arising out of the actual, alleged, or threatened contact with, existence of, exposure to, or presence of lead;
3) "personal and advertising injury" arising out of the actual, alleged, or threatened ingestion of, inhalation of, absorption of, contact with, existence of, exposure to, or presence of lead;
4) any other injury that is covered by "underlying insurance", including on a "claims-made" basis, arising out of the actual, alleged, or threatened ingestion of, inhalation of, absorption of, contact with, existence of, exposure to, or presence of lead;
5) any loss, cost, or expense arising out of any request, demand, order, statute, or regulation that any "insured" or others test for, abate, monitor, clean up, remove, contain, treat, detoxify, neutralize, or in any way respond to or assess the effects of lead; or

6) any loss, cost, or expense arising out of any claim or "suit" by or on behalf of any governmental authority relating to testing for, abating, monitoring, cleaning up, removing, containing, treating, detoxifying, neutralizing, or in any way responding to or assessing the effects of lead.

o. any of the following:

1) "bodily injury" arising out of the actual, alleged, or threatened ingestion, inhalation, or absorption of "silica";
2) "property damage" arising out of the actual, alleged, or threatened contact with, existence of, exposure to, or presence of "silica";
3) "personal and advertising injury" arising out of the actual, alleged, or threatened ingestion of, inhalation of, absorption of, contact with, existence of, exposure to, or presence of "silica";
4) any other injury that is covered by "underlying insurance", including on a "claims-made" basis, arising out of the actual, alleged, or threatened ingestion of, inhalation of, absorption of, contact with, existence of, exposure to, or presence of "silica";
5) any loss, cost, or expense arising out of any request, demand, order, statute, or regulation that any "insured" or others test for, abate, monitor, clean up, remove, contain, treat, detoxify, neutralize, or in any way respond to or assess the effects of "silica"; or
6) any loss, cost, or expense arising out of any claim or "suit" by or on behalf of any governmental authority relating to testing for, abating, monitoring, cleaning up, removing, containing, treating, detoxifying, neutralizing, or in any way responding to or assessing the effects of "silica".

p. any of the following:

1) "bodily injury" arising out of the actual, alleged, or threatened ingestion, inhalation, or absorption of asbestos, asbestos products, asbestos fibers, or asbestos dust;
2) "property damage" arising out of the actual, alleged, or threatened contact with, existence of, exposure to, or presence of asbestos, asbestos products, asbestos fibers, or asbestos dust;
3) "personal and advertising injury" arising out of the actual, alleged, or threatened ingestion of, inhalation of, absorption of, contact with, existence of, exposure to, or presence of asbestos, asbestos products, asbestos fibers, or asbestos dust;
4) any other injury that is covered by "underlying insurance", including on a "claims-made" basis, arising out of the actual, alleged, or threatened ingestion of, inhalation of, absorption of, contact with, existence of, exposure to, or presence of asbestos, asbestos products, asbestos fibers, or asbestos dust;
5) any loss, cost, or expense arising out of any request, demand, order, statute, or regulation that any "insured" or others test for, abate, monitor, clean up, remove, contain, treat, detoxify, neutralize, or in any way respond to or assess the effects of asbestos, asbestos products, asbestos fibers, or asbestos dust; or
6) any loss, cost, or expense arising out of any claim or "suit" by or on behalf of any governmental authority relating to testing for, abating, monitoring, cleaning up, removing, containing, treating, detoxifying, neutralizing, or in any way responding to or assessing the effects of asbestos, asbestos products, asbestos fibers, or asbestos dust.

q. medical payments coverage or medical expenses that are provided regardless of fault, whether or not covered by "underlying insurance".

COVERAGE U -- UMBRELLA LIABILITY

1. Insuring Agreement

   a. "We" will pay on behalf of the "insured" those sums in excess of:

      1) the "self-insured retention"; or
      2) other insurance, excluding insurance specifically purchased by the "insured" to apply in excess of the insurance afforded by this policy, which is available to the "insured" and provides coverage with respect to injury or damage to which this policy applies;

      whichever is applicable, for which an "insured" becomes legally obligated to pay as "damages" because of "bodily injury", "property damage", or "personal and advertising injury" to which this insurance applies.

      "We" have the right and duty to defend the "insured" against a "suit" seeking "damages" for such "bodily injury", "property damage", or "personal and advertising injury" which may be covered under Coverage U -- Umbrella Liability.

      If "we" have no duty to defend, "we" have the right to defend or the right to participate with the "insured" in the defense, investigation, and settlement of "suits" against the "insured" seeking "damages" to which this insurance may apply.

      However, "we" have no duty to defend the "insured" against a "suit" seeking "damages" to which this policy does not apply.

      At "our" option, "we" may investigate any "occurrence" or offense to which this insurance applies and settle the resulting claims or "suits" which "we" have the duty to defend.

   b. The amount "we" will pay for "damages" is limited as described under How Much We Pay.

   c. "We" do not have to provide a defense after "we" have paid an amount equal to the applicable "limit" as the result of:

      1) judgments; or
      2) written settlements agreed to by "us".

      "We" have no other liability or obligation to pay sums or to provide assistance or support unless specifically provided for under Supplemental Payments.

   d. This insurance applies only to "bodily injury" or "property damage" that:

      1) is caused by an "occurrence" that takes place in the "coverage territory";
      2) occurs during the policy period of this policy; and
      3) is not a continuation of, resumption of, or change in "bodily injury" or "property damage" that was known by a "designated insured" prior to the inception date of the policy period.

         If a "designated insured" knew, as stated under the Knowledge Of Bodily Injury Or Property Damage Condition, prior to the inception date of this policy period, that "bodily injury" or "property damage" had occurred, any continuation of, resumption of, or change in such "bodily injury" or "property damage" will be deemed to have been known by the "designated insured" prior to the inception date of this policy period.

"Bodily injury" or "property damage" that occurs during this policy period and which is not a continuation of, resumption of, or change in "bodily injury" or "property damage" which was known by a "designated insured", as stated under the Knowledge Of Bodily Injury Or Property Damage Condition, to have occurred prior to the inception date of this policy period, will include any continuation of, resumption of, or change in such "bodily injury" or "property damage" after the end of this policy period.

e. This insurance also applies to "personal and advertising injury" arising out of an offense committed in the course of "your" business, if the offense is committed:

1) within the "coverage territory"; and
2) during the policy period of this policy.

f. "Damages" due to "bodily injury" include "damages" claimed by any person or organization for care, loss of services, or death that may result at any time from such "bodily injury".

g. Coverage U does not apply to claims which are covered under Coverage E or would have been covered except for exhaustion of "underlying insurance" "limits".

2. Exclusions

"We" do not pay for:

a. "bodily injury" or "property damage":

1) that is expected by, directed by, or intended by the "insured"; or
2) which is the result of intentional and malicious acts of the "insured".

However, this exclusion does not apply to "bodily injury" that arises out of the use of reasonable force to protect people or property.

b. "bodily injury" or "property damage" liability which is assumed by the "insured" under a contract or an agreement.

However, this exclusion does not apply to:

1) liability for "damages" that the "insured" would have had in the absence of the contract or agreement; or
2) liability for "damages" due to "bodily injury" or "property damage" assumed in a "covered contract", but only if such "bodily injury" or "property damage" occurs after the contract or agreement has been executed.

Only with respect to liability assumed in a "covered contract", "damages" due to "bodily injury" or "property damage" include reasonable attorney fees and necessary litigation costs incurred by or for an "indemnitee", if:

a) liability to that "indemnitee" for, or for the cost of, that "indemnitee's" defense has also been assumed under the same "covered contract"; and
b) such attorney fees and litigation costs are for the defense of that "indemnitee" against a civil or administrative proceeding, alternative dispute resolution, or arbitration proceeding alleging "damages" to which this insurance applies.

However, "damages" due to "bodily injury" or "property damage" do not include reasonable attorney fees and necessary litigation costs incurred by or for an "indemnitee" when all the requirements set forth under item 4.b. of Supplemental Payments are met.

c. a claim based on violation of the responsibilities, obligations, or duties imposed on fiduciaries by the Employee Retirement Income Security Act of 1974 as amended and any similar federal, state, or local laws, statutes, or regulations.

d. "bodily injury" if benefits are provided or are required to be provided by the "insured" under a workers' compensation, disability benefits, occupational disease, unemployment compensation, or like law.

e. "bodily injury" sustained by an "employee" of the "insured" arising out of and in the course of employment as a master or member of the crew of any vessel.

f. liability imposed by automobile no-fault laws or any similar laws; uninsured motorist or underinsured motorist laws; first party physical damage coverage; personal injury protection; or automobile medical payments coverage.

g. "bodily injury", "property damage", or "personal and advertising injury" arising out of the actual, alleged, or threatened discharge, dispersal, seepage, migration, release, escape, or emission of "pollutants" at any time.

h. any loss, cost, or expense arising out of any:

1) request, demand, order, statute, or regulation that any "insured" or others test for, abate, monitor, clean up, remove, contain, treat, detoxify, neutralize, or in any way respond to or assess the effects of "pollutants"; or
2) claim or "suit" by or on behalf of any governmental authority relating to testing for, abating, monitoring, cleaning up, removing, containing, treating, detoxifying, neutralizing, or in any way responding to or assessing the effects of "pollutants".

i. "bodily injury", "property damage", or "personal and advertising injury" caused directly or indirectly by the following:

1) war, including undeclared or civil war;
2) warlike action by a military force, including action that is hindering or defending against an actual or expected attack, by any government, sovereign, or other authority using military personnel or other agents; or
3) insurrection, rebellion, revolution, usurped power, or action taken by governmental authority in hindering or defending against any of these.

j. "bodily injury" or "property damage" arising out of the ownership, maintenance, use, occupancy, renting, operation, loaning, entrusting, supervision, or "loading or unloading" of "autos", aircraft, watercraft, "mobile equipment", or "recreational vehicles".

k. "bodily injury" or "property damage" for which any "insured" may be held liable by reason of:

1) causing or contributing to the intoxication of a person;
2) the furnishing of alcoholic beverages to a person under the influence of alcohol or under the legal drinking age; or
3) a law or regulation relating to the sale, gift, distribution, or use of alcoholic beverages.

This exclusion applies only if "you" are in the business of manufacturing, distributing, furnishing, selling, or serving alcoholic beverages.

l. "bodily injury":

1) to an "employee" of the "insured" if it arises out of and occurs in the course of employment by the "insured" or while performing duties related to the conduct of the "insured's" business; or

2) to a spouse, child, parent, brother, or sister as a consequence of "bodily injury" to such injured "employee".

This exclusion applies where the "insured" is liable either as an employer or in any other capacity or there is an obligation to fully or partially reimburse a third party for "damages" arising out of l.1) or l.2) above.

However, this exclusion does not apply to liability assumed by the "insured" under a "covered contract".

m. "bodily injury", "property damage", or "personal and advertising injury" arising out of the rendering of or failure to render a professional service.

n. "bodily injury" or "personal and advertising injury":

1) to a person arising out of any:

a) refusal to employ that person;
b) termination of employment of that person; or
c) coercion, demotion, evaluation, reassignment, discipline, defamation, harassment, humiliation, malicious prosecution, discrimination, sexual misconduct, or other employment-related practices, policies, acts, or omissions directed towards that person; or

2) to a spouse, child, parent, brother, or sister of that person as a consequence of "bodily injury" or "personal and advertising injury" to that person as a result of employment-related practices described in 1)a), 1)b), or 1)c) above.

This exclusion applies whether the injury as a result of 1)a), 1)b), or 1)c) above occurs before, during, or after employment of that person.

This exclusion applies where the "insured" is liable either as an employer or in any other capacity or there is an obligation to fully or partially reimburse a third party for "damages" arising out of 1)a), 1)b), 1)c), or 2) above.

o. "property damage" to property owned by, occupied by, or rented by "you", including any cost or expense incurred by "you" or another person or organization, to repair, retrofit, replace, or maintain such property for any reason, including for the purpose of avoiding injury to a person or damage to another's property.

p. "property damage" to "products" if the damage arises out of the "products" or their parts.

q. "property damage" to that specific part of real property on which work is being performed by:

1) "you"; or
2) a contractor or subcontractor working directly or indirectly on "your" behalf;

if the "property damage" arises out of such work.

However, this exclusion does not apply with respect to liability assumed under a sidetrack agreement.

r. "property damage" to that specific part of any property that must be restored, repaired, or replaced because "your work" that was performed on the property was faulty.

However, this exclusion does not apply to:

1) "property damage" included within the "products/completed work hazard"; or
2) liability assumed under a sidetrack agreement.

s. "property damage" to personal property in the care, custody, or control of an "insured".

However, this exclusion does not apply with respect to liability assumed under a sidetrack agreement or a written trailer interchange agreement.

t. "property damage" to property that has not been physically injured or destroyed, or to "impaired property", arising out of:

1) a delay or failure to perform a contract or agreement as specified in its terms by "you" or one acting on "your" behalf; or
2) a defect, deficiency, inadequacy, or unsafe condition in "your work" or "products".

However, this exclusion does not apply to the loss of use of other property resulting from sudden and accidental physical injury or destruction of "your work" or "products" after having been put to its intended use.

u. "property damage" to property loaned to "you".

However, this exclusion does not apply with respect to liability assumed under a sidetrack agreement or a written trailer interchange agreement.

v. "property damage" to premises "you" abandon, sell, or give away, if such "property damage" originates from any part of the premises.

However, this exclusion does not apply if the premises are "your work" and were never rented, held for rental, or occupied by "you".

w. any loss, cost, or expense incurred by "you" or any other person or organization arising out of the loss of use, disposal, withdrawal, recall, inspection, repair, replacement, adjustment, or removal of "your work", "products", or "impaired property". This applies if "your work", "products", or "impaired property" is withdrawn or recalled from the market or from use by any person or organization because of a known or suspected defect, deficiency, or unsafe condition in such work, "products", or "impaired property".

x. any loss, cost, expense, or "damages" arising out of damage to, corruption of, loss of use or function of, or inability to access, change, or manipulate "data records".

y. "property damage" to "your work" if the "property damage" arises out of "your work" or any part of it and is included in the "products/completed work hazard".

However, this exclusion does not apply if damage to the work or the part of the work out of which the damage arises was performed by a subcontractor on "your" behalf.

z. "bodily injury", "property damage", or "personal and advertising injury" arising directly or indirectly out of violations of or alleged violations of:

1) the Telephone Consumer Protection Act (TCPA), including any amendments thereto, and any similar federal, state, or local laws, ordinances, statutes, or regulations;
2) the CAN-SPAM Act of 2003, including any amendments thereto, and any similar federal, state, or local laws, ordinances, statutes, or regulations;
3) the Fair Credit Reporting Act (FCRA), including any amendments thereto, such as the Fair and Accurate Credit Transaction Act (FACTA), and any similar federal, state, or local laws, ordinances, statutes, or regulations; or

4) any other federal, state, or local law, regulation, statute, or ordinance that restricts, prohibits, or otherwise pertains to the collecting, communicating, recording, printing, transmitting, sending, disposal, or distribution of material or information.

aa. "personal and advertising injury" arising out of an act committed by or directed by the "insured" who knew that "personal and advertising injury" would occur as a result of the act.

bb. "personal and advertising injury" arising out of a criminal act committed by or directed by the "insured".

cc. "personal and advertising injury" arising out of:

1) oral or written publication of material done by or at the direction of the "insured" who knew it was false; or
2) oral or written publication of material that took place prior to the beginning of the policy period.

dd. "personal and advertising injury" arising out of breach of contract, other than using the advertising ideas of another in "your" "advertisement" under an implied contract.

ee. "personal and advertising injury" arising out of the failure of goods, "products", or services to conform with quality or performance as stated in "your" "advertisement".

ff. "personal and advertising injury" arising out of an offense committed by an "insured" whose business is:

1) advertising, broadcasting, publishing, or telecasting;
2) designing, developing, or coordinating the content of websites for others; or
3) providing Internet access, search, service, or content capabilities.

However, this exclusion does not apply to false arrest, detention, or imprisonment; malicious prosecution; and wrongful entry into, wrongful eviction from, or invasion of the right of private occupancy of a room, dwelling, or premises that a person occupies and which is committed by or on behalf of the owner, landlord, or lessor of the room, dwelling, or premises.

The placement of advertising, including frames, borders, or links, on the Internet is not in and of itself considered being in the business of advertising, broadcasting, publishing, or telecasting.

gg. "personal and advertising injury" arising out of wrong descriptions of the price of an "insured's" goods, "products", or services as stated in "your" "advertisement".

hh. "personal and advertising injury" liability which is assumed by the "insured" under a contract or an agreement.

However, this exclusion does not apply to liability that an "insured" would have had in the absence of the contract or agreement.

ii. "personal and advertising injury" arising out of any violation of intellectual property rights, including infringement of trademark, trade-secret, or patent rights or copyright. With respect to this exclusion, intellectual property rights do not include using the advertising ideas of others in "your" "advertisement".

However, this exclusion does not apply to a violation or infringement of copyright, slogan, or trade-dress rights that occur in "your" "advertisement".

jj. "personal and advertising injury" arising out of electronic chat rooms, gripe sites, social networking sites, blogs, bulletin boards, or other forums which the "insured" hosts, owns, or has the control or authority to manage or update.

kk. "personal and advertising injury" arising out of using, without permission, the name or product of others on "your" website or in "your" e-mail address, domain name, or metatags for the purpose of misleading the potential customers of another.

ll. any of the following:

1) "bodily injury" arising out of the actual, alleged, or threatened ingestion, inhalation, or absorption of lead;
2) "property damage" arising out of the actual, alleged, or threatened contact with, existence of, exposure to, or presence of lead;
3) "personal and advertising injury" arising out of the actual, alleged, or threatened ingestion of, inhalation of, absorption of, contact with, existence of, exposure to, or presence of lead;
4) any loss, cost, or expense arising out of any request, demand, order, statute, or regulation that any "insured" test for, abate, monitor, clean up, remove, contain, treat, detoxify, neutralize, or in any way respond to or assess the effects of lead; or
5) any loss, cost, or expense arising out of any claim or "suit" by or on behalf of any governmental authority relating to testing for, abating, monitoring, cleaning up, removing, containing, treating, detoxifying, neutralizing, or in any way responding to or assessing the effects of lead.

mm. any of the following:

1) "bodily injury" arising out of the actual, alleged, or threatened ingestion, inhalation, or absorption of "silica";
2) "property damage" arising out of the actual, alleged, or threatened contact with, existence of, exposure to, or presence of "silica";
3) "personal and advertising injury" arising out of the actual, alleged, or threatened ingestion of, inhalation of, absorption of, contact with, existence of, exposure to, or presence of "silica";
4) any loss, cost, or expense arising out of any request, demand, order, statute, or regulation that any "insured" test for, abate, monitor, clean up, remove, contain, treat, detoxify, neutralize, or in any way respond to or assess the effects of "silica" ; or
5) any loss, cost, or expense arising out of any claim or "suit" by or on behalf of any governmental authority relating to testing for, abating, monitoring, cleaning up, removing, containing, treating, detoxifying, neutralizing, or in any way responding to or assessing the effects of "silica".

nn. any of the following:

1) "bodily injury" arising out of the actual, alleged, or threatened ingestion, inhalation, or absorption of asbestos, asbestos products, asbestos fibers, or asbestos dust;
2) "property damage" arising out of the actual, alleged, or threatened contact with, existence of, exposure to, or presence of asbestos, asbestos products, asbestos fibers, or asbestos dust;
3) "personal and advertising injury" arising out of the actual, alleged, or threatened ingestion of, inhalation of, absorption of, contact with, existence of, exposure to, or presence of asbestos, asbestos products, asbestos fibers, or asbestos dust;
4) any loss, cost, or expense arising out of any request, demand, order, statute, or regulation that any "insured" or others test for, abate, monitor, clean up, remove, contain, treat, detoxify, neutralize, or in any way respond to or assess the effects of asbestos, asbestos products, asbestos fibers, or asbestos dust; or

5) any loss, cost, or expense arising out of any claim or "suit" by or on behalf of any governmental authority relating to testing for, abating, monitoring, cleaning up, removing, containing, treating, detoxifying, neutralizing, or in any way responding to or assessing the effects of asbestos, asbestos products, asbestos fibers, or asbestos dust.

SUPPLEMENTAL PAYMENTS

1. "We" will pay the following for any claim "we" investigate or settle, or any "suit" "we" defend, if "we" have a duty to defend:

   a. the court costs taxed against the "insured" in the "suit". These costs do not include attorneys' fees or attorneys' expenses;

   b. the expenses incurred by "us";

   c. the necessary and reasonable expenses incurred by the "insured" at "our" request to assist "us" in the defense or investigation of the claim or "suit", including up to $250 a day for actual loss of earnings for time spent away from work;

   d. pre-judgment interest awarded against the "insured" on that part of the judgment "we" pay. If "we" offer to pay the "limit", "we" will not pay any pre-judgment interest based on that period of time after the offer;

   e. the interest which accrues on the entire amount of a judgment beginning with entry of a judgment and ending when "we" tender, deposit in court, or pay the portion of the judgment that is up to, but does not exceed, "our" "limit";

   f. the cost of appeal bonds or bonds for the release of attachments up to "our" "limit".

      However, "we" are not required to apply for or furnish bonds; and

   g. the cost, up to $2,000, for bail bonds, whether or not due to an accident or traffic law violation, required of an "insured" because of an "occurrence" to which this policy applies.

      However, "we" are not required to apply for or furnish bonds.

2. With respect to Coverage E, if the "limits" of any "underlying insurance" are reduced by payment of defense costs, related supplemental payments under this policy will also reduce the applicable "limits" under this policy.

   Otherwise, supplemental payments are in addition to the "limits" for Commercial Excess/Umbrella Liability Coverage.

3. When "we" have the right but not the duty to defend the "insured" and choose to participate in the defense, "we" will pay "our" own expenses but will not contribute to the expenses of the "insured" or the "underlying insurer".

4. If "we" defend an "insured" against a "suit" and an "indemnitee" of the "insured" is also named as a party to the "suit":

   a. "we" will:

      1) defend that "indemnitee";
      2) pay attorneys' fees incurred by "us" in the defense of that "indemnitee";
      3) pay necessary litigation expenses incurred by "us"; and
      4) pay necessary litigation expenses incurred by the "indemnitee" at "our" request.

b. all of the following conditions must be met:

1) the "suit" seeks "damages" against the "indemnitee" for which the "insured" has assumed the liability of the "indemnitee" in a "covered contract";
2) this insurance applies to such liability assumed by the "insured";
3) the obligation to defend, or the cost of the defense of, that "indemnitee", has also been assumed by the "insured" in the same "covered contract";
4) no conflict appears to exist between the interests of the "insured" and the interests of the "indemnitee" in the allegations in the "suit" and in the information "we" know about the "occurrence";
5) the "indemnitee" and the "insured" ask "us" to conduct and control the defense of that "indemnitee" against such "suit" and agree that "we" can assign the same counsel to defend the "insured" and the "indemnitee"; and
6) the "indemnitee" agrees to:

a) cooperate with "us" in the investigation, settlement, or defense of the "suit";
b) immediately send "us" copies of any demands, notices, summonses, or legal papers received in connection with the "suit";
c) notify any other insurer whose coverage is available to the "indemnitee";
d) cooperate with "us" with respect to coordinating other applicable insurance available to the "indemnitee";
e) provide "us" with written authorization to obtain records regarding the "suit";
f) provide "us" other information related to the "suit"; and
g) provide "us" with written authorization to conduct and control the defense of the "indemnitee" in such "suit".

If the above conditions are met, such payments will not be deemed to be "damages" for "bodily injury" or "property damage" and will not reduce the "limits", regardless of the provisions of exclusion 2.b.2) of Coverage U.

"Our" obligation to provide a defense for an "insured's" "indemnitee" and to pay for the "indemnitee's" defense and litigation costs as Supplemental Payments ceases when "we" have paid an amount equal to the applicable "limit" as the result of a judgment or settlement or when a requirement set forth under 4.b.1), 2), 3), 4), 5), and 6) above is no longer met.

WHAT MUST BE DONE IN CASE OF LOSS

1. **Cooperation** --

a. With respect to Coverage E, "you" must cooperate with the "underlying insurers" as required by the terms of their policies and comply with all terms and conditions of those policies.

b. All "insureds" involved must cooperate with "us" in investigating or settling a claim or defending a "suit".

2. **Notice** -- In the case of an "occurrence" or offense, or if an "insured" becomes aware of anything that indicates that there might be a claim under the Commercial Excess/Umbrella Liability Coverages, "you" must see to it that "we" receive notice as soon as practicable. To the extent possible, the notice to "us" should include:

a. the name of the "insured", the policy number, and the time, place, and details of the "occurrence" or offense; and

b. the names and addresses of all known potential claimants and witnesses.

3. **Voluntary Payments** -- Any payment or expense made or assumed by any "insured" without "our" written consent will be paid or assumed by the "insured".

4. **Other Duties** -- If a claim is made or a "suit" is brought against any "insured", "you" and any other "insured" involved in the claim or "suit" must promptly give "us" copies of all legal papers, demands, and notices that relate to such claim or "suit".

   At "our" request, "you" and any other "insured" must cooperate and assist "us" in:

   a. the enforcement of any right of recovery or indemnification against all parties who may be liable to an "insured" for the injury or damage;

   b. the securing of and giving of evidence; and

   c. obtaining the attendance of all witnesses.

HOW MUCH WE PAY

COVERAGE E -- EXCESS LIABILITY AND COVERAGE U -- UMBRELLA LIABILITY

1. The "limits", shown on the "declarations" and subject to the following conditions, are the most "we" pay regardless of the number of:

   a. "insureds" under this policy;

   b. persons or organizations who sustain injury or damage;

   c. claims made or "suits" brought;

   d. vehicles or watercraft involved in an accident, to the extent covered by this policy; or

   e. coverages provided under this policy.

2. The General Aggregate Limit is the most "we" will pay for the sum of all "damages":

   a. under Coverage E and Coverage U; and/or

   b. defense costs paid under Coverage E when the "limits" of the applicable "underlying insurance" are reduced by payment of defense costs.

   However, the General Aggregate Limit does not apply to "damages":

   a. due to "bodily injury" and "property damage" included in the "products/completed work hazard"; or

   b. due to "bodily injury" and "property damage" included in "underlying insurance" which are not subject to an aggregate "limit" in such "underlying insurance".

3. The Products/Completed Work Hazard Aggregate Limit is the most "we" will pay for "damages" due to "bodily injury" and "property damage" included in the "products/completed work hazard".

4. The Each Occurrence Limit, subject to the General Aggregate Limit and the Products/Completed Work Hazard Aggregate Limit, is the most "we" will pay for the sum of all:

   a. "damages" under Coverage E and Coverage U; and/or

   b. defense costs paid under Coverage E when the "limits" of the applicable "underlying insurance" are reduced by payment of defense costs;

   due to:

   a. all "bodily injury" and "property damage" arising out of a single "occurrence";

   b. all "personal and advertising injury" sustained by any one person or organization; and

c. under Coverage E, any other injury or damage arising out of a negligent act, error, omission, injury, event, incident, or offense.

5. With respect to Coverage E, if the "limits" of any "underlying insurance" are exhausted by payment of claims, "damages", and/or defense costs, this policy will continue to provide coverage as "underlying insurance".

6. With respect to Coverage E, if the "limits" of any "underlying insurance" are reduced by payment of claims, "damages", and/or defense costs, this policy will apply as excess of the reduced "underlying insurance".

7. With respect to Coverage E, if "underlying insurance" is not concurrent with the policy period of this Commercial Excess/Umbrella Liability Coverage, only claims for "occurrences" due to "bodily injury" or "property damage", offenses due to "personal and advertising injury", and other negligent acts, errors, omissions, injuries, events, and incidents that are covered by "underlying insurance" and that take place during the policy period of this policy will be considered in determining the extent to which any aggregate "limit" in the "underlying insurance" has been reduced or exhausted.

   However, for any "underlying insurance" written on a "claims-made" basis, the available "limits" of "underlying insurance" will only be reduced or exhausted by payment of:

   a. claims that are made during the policy period, or any Extended Reporting Period, of this Commercial Excess/Umbrella Liability Coverage; or

   b. related defense costs, but only if the "limits of "underlying insurance" are reduced by payment of defense costs.

8. The General Aggregate Limit and the Products/Completed Work Hazard Aggregate Limit apply separately to each consecutive 12 month period beginning with the inception date shown on the "declarations" for this Commercial Excess/Umbrella Liability Coverage. They also apply separately to any remaining policy period of less than 12 months, unless the Commercial Excess/Umbrella Liability Coverage was extended after it was written. In that case, the additional period will be considered part of the last preceding period for the purpose of determining "limits".

CONDITIONS

1. **Appeals** -- If an "underlying insurer" or the "insured" elects not to appeal a judgment in excess of the "limit" of any "underlying insurance" with respect to Coverage E, or in excess of the "self-insured retention" with respect to Coverage U, "we" may elect to make such appeal. If "we" so elect, "we" will be liable for all expenses "we" incur that pertain to such appeal.

2. **Assignment** -- This policy may not be assigned without "our" written consent.

3. **Bankruptcy Of An Insured** -- Bankruptcy or insolvency of an "insured" does not relieve "us" of "our" obligations under this policy.

4. **Bankruptcy Of Underlying Insurer** -- With respect to Coverage E, in the event of bankruptcy or insolvency of any "underlying insurer", any insurance provided by this policy will not replace such "underlying insurance", but will apply as if the "limits" of "underlying insurance" were valid and collectible.

5. **Cancellation And Nonrenewal** -- See the state-specific amendatory endorsement.

6. **Change, Modification, Or Waiver Of Policy Terms** -- A waiver or change of the "terms" of this policy must be issued by "us" in writing to be valid.

7. **Conformity With Statute** -- If the "terms" of this policy conflict with the statutes of the state where this policy is issued, the "terms" are amended to conform to such statutes.

8. **Examination Of Books And Records** -- "We" may examine and audit "your" books and records that relate to this policy during the policy period and within three years after the policy has expired.

9. **Inspections** -- "We" have the right, but are not obligated, to inspect "your" property and operations at any time. This inspection may be made by "us" or may be made on "our" behalf. An inspection or its resulting advice or report does not warrant that "your" property or operations are safe, healthful, or in compliance with laws, rules, or regulations. Inspection or reports are for "our" benefit only.

10. **Knowledge Of Bodily Injury Or Property Damage** -- With respect to Coverage U, knowledge of "bodily injury" or "property damage" will be deemed to have occurred at the earliest of the following times:

    a. when a claim or demand for "damages" alleging "bodily injury" or "property damage" is received by any "designated insured";

    b. when any "designated insured" reports the "bodily injury" or "property damage" to "us" or any other insurer; or

    c. when any "designated insured" becomes aware of anything that indicates that "bodily injury" or "property damage" may have occurred or is occurring.

11. **Legal Action Against Us** -- No lawsuit can be brought against "us" unless:

    a. all "terms" of this policy have been complied with; and

    b. the amount of an "insured's" liability has been determined by:

        1) a final judgment against an "insured" as a result of a trial; or

        2) a written agreement by the "insured", the claimant, or the claimant's legal representative, and "us".

    However, "we" will not pay for injury or damage that is not covered by this policy or that exceeds the applicable "limit".

    No person has a right under this policy to join "us" or implead "us" in actions that are brought to determine an "insured's" liability.

12. **Maintenance Of Underlying Insurance** -- With respect to Coverage E, "you" must maintain the "underlying insurance" in full force and effect during the term of this policy.

    If "you" fail to maintain "underlying insurance", the insurance provided by this policy will not replace such "underlying insurance" but will apply as if that "underlying insurance" were valid and collectible.

    If any "underlying insurance" is canceled or not renewed and not replaced or there is an increase in the scope of coverage in any "underlying insurance", "you" must notify "us" at once. "We" will not be liable under this policy for more than "we" would have been liable if that "underlying insurance" had not been terminated or had been kept at its original "limits" or coverages.

    Reduction or exhaustion of any aggregate "limit" in any "underlying insurance" by payments for judgments, settlements, or expenses for "occurrences" or offenses to which this policy applies will not be a failure to maintain "underlying insurance" in full force and effect.

    No statement contained in this condition limits "our" right to cancel or not renew this policy.

13. **Misrepresentation, Concealment, Or Fraud** -- This coverage is void as to "you" and any other "insured" if, before or after a loss:

    a. "you" have or any other "insured" has willfully concealed or misrepresented:

1) a material fact or circumstance that relates to this insurance or the subject thereof; or
2) "your" interest or any other "insured's" interest herein; or

b. there has been fraud or false swearing by "you" or any other "insured" with regard to a matter that relates to this insurance or the subject thereof.

14. **Subrogation** -- If "we" pay under the Commercial Excess/Umbrella Liability Coverage, "we" may require from an "insured" an assignment of any right of recovery. "We" are not liable under the Commercial Excess/Umbrella Liability Coverage to the extent that any "insured" has impaired "our" right to recover. An "insured" may waive its right to recover, in writing, before an "occurrence" takes place.

15. **Transfer Of Defense** -- With respect to Coverage E, when the applicable "limit" of "underlying insurance" has been exhausted by the payment of claims, settlements, judgments, and/or defense costs:

    a. the duty to defend a "suit" is transferred to "us"; and

    b. with respect to claims or "suits" that would otherwise have been covered by "underlying insurance", "we" will cooperate in the transfer and control to "us" of any outstanding claims or "suits" to which this insurance applies.

16. **Separate Insureds** -- Coverage provided under this policy applies separately to each "insured" against whom claim is made or "suit" is brought.

    However, this does not affect the "limits" stated under How Much We Pay.

17. **Premium** -- The premium shown on the "declarations" was computed on the basis of "our" rules and rates. If the premium is shown on the "declarations" as a deposit premium, "we" will compute the final earned premium at the end of each audit period shown on the "declarations". If it is more than the deposit premium paid by "you", "we" will bill "you" for the difference. If the final earned premium is less than the deposit premium paid by "you", "we" will return the difference to "you". "You" must maintain records of the information that is necessary for computing the premium. Copies of the records must be sent to "us" at the end of the audit period or when requested by "us".

    If the premium for coverage provided by this policy is based upon an audit of exposures and the final premium is determined after the expiration of the policy, any additional premium owed to "us" is due on the due date that appears on the billing notice.

18. **Insurance Under More Than One Policy** --

    a. Insurance under this policy is excess over any other insurance and will not contribute with any other insurance, whether the other insurance is primary, excess, contingent, or on any other basis.

       However, this condition will not apply to insurance specifically written as excess over this policy.

    b. When this insurance is excess over any other insurance:

       1) "we" will have no duty to defend under Coverage E or Coverage U any "suit" that any other insurer has a duty to defend. If no other insurer defends, "we" will do so.

          However, "we" will be entitled to the "insured's" rights against all those other insurers; and

2) "we" will pay "our" share of the amount of loss, if any, that exceeds the sum of:

   a) the total amount that all such other insurance would pay for the loss in the absence of this insurance; and
   b) the total of all deductibles and self-insured amounts required by such other insurance.

19. **Loss Payable** -- This insurance applies only when the "insured", the "underlying insurer", or any other insurance has become obligated to pay the "limits" of "underlying insurance", the "self-insured retention", or the "limits" of any other insurance which is available to the "insured" and provides coverage with respect to injury or damage to which this policy applies, whichever is applicable. The obligation of the "insured" to pay will have been previously determined by a final settlement or judgment after trial or written agreement between the "insured", claimant or the claimant's legal representative, and "us".

20. **Extended Coverage Territory** --

    a. "We" may be prevented by reason of law or by another reason from defending the "insured" against a "suit" that is brought within the "coverage territory", but in a location that is outside of the United States of America (including its territories and possessions), Puerto Rico, or Canada. If "we" would have defended that "suit" under the "terms" of this policy, had "we" not been prevented from doing so, "we" will reimburse the "insured" for the necessary and reasonable costs the "insured" incurs for the defense of the "suit". However, "we" will reimburse the "insured" for defense costs only to the extent that such costs would have been covered as Supplemental Payments provided by this policy. Payment made under these "terms" is in addition to the "limit" for the Commercial Excess/Umbrella Liability Coverage, except as provided under item 2., Supplemental Payments.

    b. If "we" are prevented by reason of law or by another reason from paying, on behalf of an "insured", those sums for which the "insured" becomes legally obligated to pay as "damages" to which this insurance applies within the "coverage territory", but in a location that is outside of the United States of America (including its territories and possessions), Puerto Rico, or Canada, "we" will reimburse the "insured" for such sums.

    c. All payments or reimbursements "we" make under Supplemental Payments for defense costs and for "damages" because of judgments or settlements will be made in U.S. currency.

       Payments or reimbursements under Supplemental Payments will reflect the prevailing exchange rate at the time the costs were incurred.

       Payments or reimbursements for "damages" will reflect the prevailing exchange rate at the time the "insured" became legally obligated to pay such "damages".

    d. If "you" disagree with "us" with respect to the coverage provided by this policy, any dispute must be filed in the courts of the United States of America (including its territories and possessions), Puerto Rico, or Canada.

    e. "You" must maintain the coverage required by law, statute, regulation, or other governmental authority. This insurance will not be invalid if "you" fail to maintain such coverage as required; however, this insurance will apply as if the required coverage was in full force and effect.

       Reduction or exhaustion of any aggregate "limit" by payments for judgments, settlements, or expenses for "occurrences" or offenses to which this policy applies will not be a failure to maintain such coverage required by law, regulation, or other governmental authority in full force and effect.

NUCLEAR ENERGY LIABILITY EXCLUSION

1. Exclusion

   a. This insurance does not apply under any liability coverage, to "bodily injury" or "property damage":

      1) with respect to which an "insured" under the policy is also an insured under a Nuclear Energy Liability policy issued by Nuclear Energy Liability Insurance Association, Mutual Atomic Energy Liability Underwriters, Nuclear Insurance Association of Canada, or any of their successors, or would be an insured under any such policy but for its termination upon exhaustion of its "limit" of liability; or
      2) resulting from the "hazardous properties" of "nuclear material" and with respect to which:

         a) any person or organization is required to maintain financial protection pursuant to the Atomic Energy Act of 1954, or any law amendatory thereto; or
         b) the "insured" is, or had this policy not been issued would be, entitled to indemnity from the United States of America or any agency thereof, under any agreement entered into by the United States of America or any agency thereof, with any person or organization.

   b. This insurance does not apply under any liability coverage, to "bodily injury" or "property damage" resulting from the "hazardous properties" of "nuclear material", if:

      1) the "nuclear material":

         a) is at any "nuclear facility" owned by, operated by, or on behalf of an "insured"; or
         b) has been discharged or dispersed therefrom;

      2) the "nuclear material" is contained in "spent fuel" or "waste" at any time possessed, handled, used, stored, processed, transported, or disposed of by or on behalf of an "insured"; or
      3) the "bodily injury" or "property damage" arises out of the furnishing by an "insured" of services, materials, parts, or equipment in connection with the planning, construction, maintenance, operation, or use of any "nuclear facility", but if such facility is located within the United States of America, its territories or possessions, or Canada, this exclusion b.3) applies only to "property damage" to such "nuclear facility" and any property thereat.

2. With respect to only the Nuclear Energy Liability Exclusion, the following definitions are added:

   a. "Hazardous properties" include radioactive, toxic, or explosive properties.

   b. "Nuclear material" means "source material", "special nuclear material", or "by-product material".

   c. "Source material", "special nuclear material", and "by-product material" have the meanings given them in the Atomic Energy Act of 1954, or in any law amendatory thereof.

   d. "Spent fuel" means any fuel element or fuel component, solid or liquid, which has been used or exposed to radiation in a "nuclear reactor".

   e. "Waste" means any "waste" material:

      1) containing "by-product material" other than the tailings or "wastes" produced by the extraction of uranium or thorium from any ore processed primarily for its "source material" content; and

2) resulting from the operation by any person or organization of any "nuclear facility" included under the first two paragraphs of the definition of "nuclear facility".

f. "Nuclear facility" means:

1) any "nuclear reactor";
2) any equipment or device designed or used for:

a) separating the isotopes of uranium or plutonium;
b) processing or utilizing "spent fuel"; or
c) handling, processing, or packaging "waste";

3) any equipment or device used for the processing, fabricating, or alloying of "special nuclear material" if at any time the total amount of such material in the custody of the "insured" at the premises where such equipment or device is located consists of or contains more than 25 grams of plutonium or uranium-233 or any combination thereof, or more than 250 grams of uranium-235; or

4) any structure, basin, excavation, premises, or place prepared or used for the storage or disposal of "waste";

and includes the site on which any of the foregoing is located, all operations conducted on such sites, and all premises used for such operations.

g. "Nuclear reactor" means any apparatus designed or used:

1) to sustain nuclear fission in a self-supporting chain reaction; or
2) to contain a critical mass of fissionable material.

h. "Property damage" includes all forms of radioactive contamination of property.

CU 0001 09 10

CALIFORNIA DEPARTMENT OF INSURANCE

COMPANY PROFILE

Company Information

XL INSURANCE AMERICA, INC.

70 SEAVIEW AVENUE
STAMFORD, CT 06902
800-622-7311

Old Company Names	Effective Date
REPUBLIC CAS CO	12/29/1954
VANGUARD INSURANCE COMPANY	08/06/1998
WINTERTHUR INTERNATIONAL AMERICA INSURANCE COMPANY	10/27/2003

Agent For Service

AMANDA GARCIA
330 N Brand Blvd Ste 700
Glendale CA 91203-2336

Reference Information

NAIC #:	24554
California Company ID #:	1384-7
Date Authorized in California:	07/01/1950
License Status:	UNLIMITED-NORMAL
Company Type:	Property & Casualty
State of Domicile:	DELAWARE

back to top

NAIC Group List

NAIC Group #: 0968 AXA INS GRP

Lines Of Business

The company is authorized to transact business within these lines of insurance.
For an explanation of any of these terms, please refer to the glossary.

AIRCRAFT
AUTOMOBILE
BOILER AND MACHINERY
BURGLARY
CREDIT
DISABILITY
FIRE
LIABILITY
MARINE
MISCELLANEOUS
PLATE GLASS
SPRINKLER
SURETY
WORKERS' COMPENSATION

back to top

CALIFORNIA DEPARTMENT OF INSURANCE

COMPANY PROFILE

Company Information

GREENWICH INSURANCE COMPANY

70 SEAVIEW AVE
STAMFORD, CT 06902
800-622-7311

Old Company Names	Effective Date
HARBOR INSURANCE COMPANY	03/19/1991

Agent For Service

AMANDA GARCIA
330 N Brand Blvd Ste 700
Glendale CA 91203-2336

Reference Information

NAIC #:	22322
California Company ID #:	1312-8
Date Authorized in California:	05/01/1946
License Status:	UNLIMITED-NORMAL
Company Type:	Property & Casualty
State of Domicile:	DELAWARE

back to top

NAIC Group List

NAIC Group #: 0968 AXA INS GRP

Lines Of Business

The company is authorized to transact business within these lines of insurance. For an explanation of any of these terms, please refer to the glossary.

AIRCRAFT
AUTOMOBILE
BOILER AND MACHINERY
BURGLARY
COMMON CARRIER LIABILITY
CREDIT
DISABILITY
FIRE
LIABILITY
MARINE
MISCELLANEOUS
PLATE GLASS
SPRINKLER
SURETY
TEAM AND VEHICLE
WORKERS' COMPENSATION

back to top

CALIFORNIA DEPARTMENT OF INSURANCE

COMPANY PROFILE

Company Information

TRANSVERSE INSURANCE COMPANY

155 VILLAGE BLVD
PRINCETON, NJ 08540
877-522-7343

Old Company Names	Effective Date
CARDIF PROPERTY AND CASUALTY INSURANCE COMPANY	07/21/2011
FINANCIAL AMERICAN PROPERTY AND CASUALTY INSURANCE COMPANY	11/21/2019
INDUSTRIAL UNDERWRITERS INSURANCE COMPANY	09/07/2006

Agent For Service

AMANDA GARCIA
330 N Brand Blvd Ste 700
Glendale CA 91203-2336

Reference Information

NAIC #:	21075
California Company ID #:	1964-6
Date Authorized in California:	05/15/1969
License Status:	UNLIMITED-NORMAL
Company Type:	Property & Casualty
State of Domicile:	TEXAS

back to top

NAIC Group List

NAIC Group #: 4967 Transverse Ins Grp LLC Grp

Lines Of Business

The company is authorized to transact business within these lines of insurance. For an explanation of any of these terms, please refer to the glossary.

AIRCRAFT
AUTOMOBILE
BOILER AND MACHINERY
BURGLARY
COMMON CARRIER LIABILITY
CREDIT
DISABILITY
FIRE
LIABILITY
MARINE
MISCELLANEOUS
PLATE GLASS
SPRINKLER
SURETY
TEAM AND VEHICLE
WORKERS' COMPENSATION

back to top